UNIT LOAD FOR UNDERWAY REPLENISHMENT FIN ASSEMBLY, BOMB, FOR 1000 LB G.P. BOMB IN ADAPTER, PALLET, ADU-425/E

UNIT LOAD DATA

NUMBER OF FIN ASSEMBLIES PER UNIT LOAD	12
WEIGHT OF ONE FIN ASSEMBLY	56.8 LB
WEIGHT OF WOOD BATTENS	11 LB
WEIGHT OF STEEL STRAPPING	7.4 LB
WEIGHT OF PALLET	94 LB
WEIGHT OF ADAPTER (2 FRAMES @ 45.50 LB)	91 LB
GROSS WEIGHT OF UNIT LOAD	885 LB □
CUBE	43.7 CU FT

□ DO NOT USE FOR SHIPPING WEIGHT

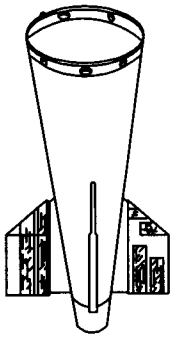

FIN ASSEMBLY
(WITH PROTECTORS ATTACHED)

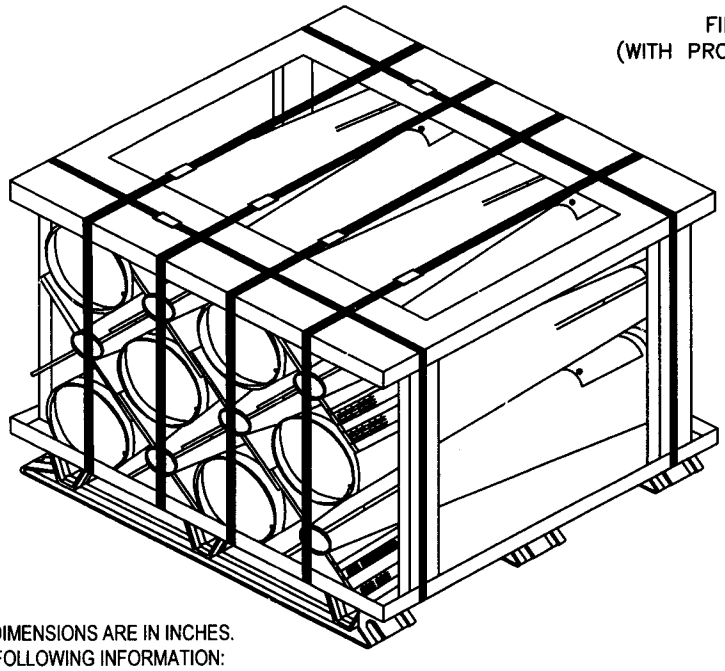

NOTES

1. UNLESS OTHERWISE SPECIFIED, DIMENSIONS ARE IN INCHES.
2. SEE SW020-AC-SAF-010 FOR THE FOLLOWING INFORMATION:
   A. CROSS REFERENCE TO ASSOCIATED TRUCK LOADING, CONTAINER LOADING AND CAR LOADING MILITARY STANDARDS.
   B. HAZARD CLASSIFICATION.
3. DO NOT STACK MORE THAN 4 UNIT LOADS HIGH IN STORAGE.
4. WOOD SHALL CONFORM TO VOLUNTARY PRODUCTS STANDARD PS-20-99.
5. ALL CONIFEROUS WOOD COMMODITIES PRODUCED OF NON-MANUFACTURED WOOD SHALL BE CONSTRUCTED FROM HEAT TREATED (HEAT TREATED TO 56 DEGREES CENTIGRADE FOR 30 MINUTES) MATERIAL. ALL CONIFEROUS WOOD SHALL BE CERTIFIED BY AN ACCREDITED AGENCY RECOGNIZED BY THE AMERICAN LUMBER STANDARDS COMMITTEE (ALSC) IN ACCORDANCE WITH NON-MANUFACTURED WOOD PACKING POLICY AND NON-MANUFACTURED WOOD PACKING ENFORCEMENT REGULATIONS.
6. FOR UNIT LOAD QUALIFICATION, SEE NWHL REPORT 7557.

REV.	REVISION DESCRIPTION	DATE	TDA	SYSCOM
A	SEE NSWC IHD DET EARLE ECP 103046	6/5/03	S/AVS	S/KZ
–	SUPERSEDES MIL–STD–1323–283A	5/31/02	S/AVS	S/KZ

TECH DATA MANAGEMENT SUPERVISOR	EP/ S/AVS	5/31/02
SYSTEMS ENG. SUPERVISOR	S/GB	5/31/02

S/ K. H. ZIMMS 5/31/02
NAVSEASYSCOM (BY DIRECTION)

DISTRIBUTION STATEMENT A
APPROVED FOR PUBLIC RELEASE: DISTRIBUTION IS UNLIMITED

REQUIREMENTS FOR CONSTRUCTION OF THIS LOAD SHALL CONSIST OF THIS DOCUMENT & THE LATEST ISSUE OF MIL–STD–1323 (NAVY).

THIS LOAD IS AUTHORIZED & RELEASED FOR SHIPPING & STORAGE, TRANSFER–AT–SEA & FOR SHIPMENT BY COMMON CARRIER.

DEPARTMENT OF THE NAVY
NAVAL SEA SYSTEMS COMMAND
WASHINGTON, D.C., 20362

CAGE CODE 53711

SIZE A

DWG NO. 6214434 REV. A

PALLETIZING PROCEDURE

(A) APPLY PROTECTORS, ITEM 6, TO FIN ASSEMBLIES AS SHOWN IN DETAIL ON PAGE 3.
(B) THREAD STRAPPING, ITEM 3, BETWEEN 4th & 5th DECK WIRES ON BOTH SIDES OF PALLET, ITEM 1, AS SHOWN IN DETAIL A ON PAGE 3.
(C) POSITION BOTTOM FRAME OF ADAPTER, ITEM 2, ON THE PALLET WITH THE FLANGES UP AND EQUAL OVERHANG ON BOTH SIDES.

NOTE

TOP & BOTTOM FRAMES OF ADAPTER ARE ALIKE.
ALL FIN ASSEMBLIES SHALL BE POSITIONED WITH THE ACCESS PORT UP.

(D) POSITION THE 1st LAYER OF FIN ASSEMBLIES AS SHOWN IN DETAIL B ON PAGE 3.
(E) POSITION THE 2nd & 3rd LAYERS OF FIN ASSEMBLIES, ALTERNATING END FOR END AND INTERLOCKING FINS AS SHOWN IN SECTION B-B ON PAGE 3.
(F) POSITION THE TOP FRAME OF ADAPTER, ITEM 2, ON THE FIN ASSEMBLIES WITH THE FLANGES DOWN.
(G) POSITION BATTENS, ITEM 8, INSIDE THE ADAPTER FLANGES AS SHOWN. ADVISORY: INSERT BATTEN IN BOTTOM FRAME AND LIFT CORNER OF TOP FRAME TO INSERT TOP END OF BATTEN. SHIM BEHIND BATTENS WHERE NECESSARY TO KEEP BATTENS FLUSH AGAINST TOP & BOTTOM FLANGES.
(H) POSITION STRAPPING, ITEM 3, OVER TOP FRAME OF ADAPTER. TENSION AND SECURE WITH DOUBLE NOTCHED SEAL, ITEM 5.
(I) POSITION STRAPPING, ITEM 4, UNDER PALLET DECK, AND OVER TOP FRAME OF ADAPTER. TENSION AND SECURE WITH DOUBLE NOTCHED SEAL, ITEM 5.

MARKING:
IN ADDITION TO ANY SPECIAL MARKING REQUIRED BY CONTRACT OR ORDER, THE UNIT LOAD SHALL BE MARKED IN ACCORDANCE WITH 6214251.

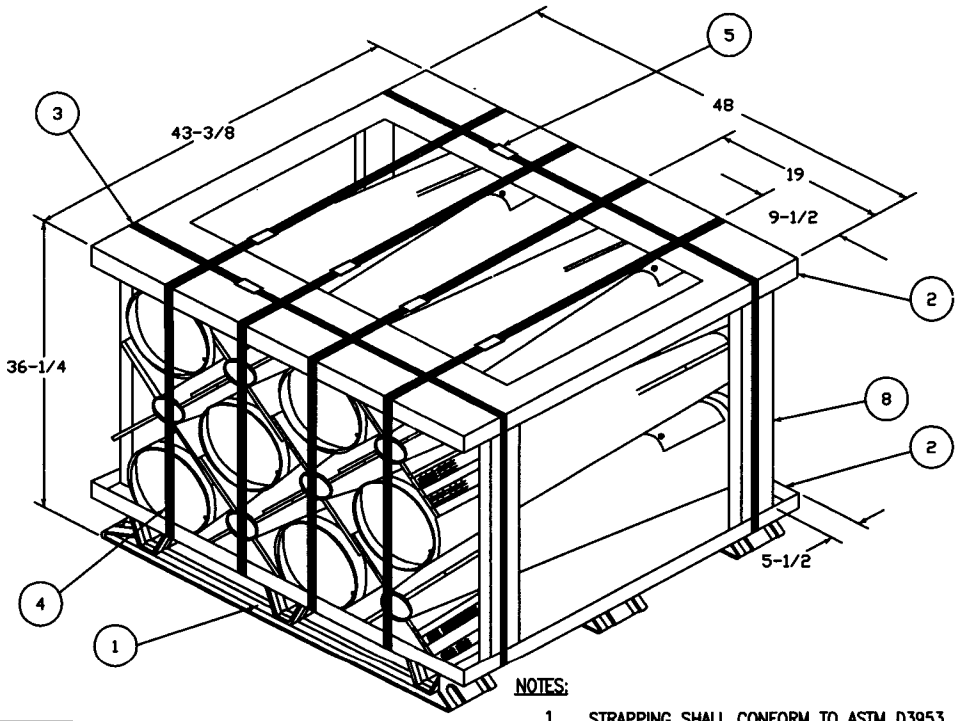

NOTES:
1. STRAPPING SHALL CONFORM TO ASTM D3953, FLAT, TYPE 1, HEAVY DUTY, FINISH B, GRADE 2.
2. SEALS SHALL CONFORM TO ASTM D3953, CLASS H, FINISH B, GRADE 2, STYLE I, II OR IV.

WARNING

WEAR LEATHER GLOVES AND EYE PROTECTION (WITH SIDE SHIELDS) OR GOGGLES TO PREVENT INJURY WHEN PERFORMING STRAPPING OPERATIONS. RAPIDLY UNCOILING STRAPPING MAY CAUSE INJURY. DIRECT STRAPPING AWAY FROM PERSONNEL WHEN CUTTING STRAPPING UNDER TENSION.

DEPALLETIZING PROCEDURE

(A) CUT AND REMOVE STRAPPING.
(B) REMOVE TOP FRAME.
(C) REMOVE BATTENS.
(D) REMOVE FINS.
(E) REMOVE BOTTOM FRAME.

ITEM	REQ'D	DESCRIPTION	MAT'L/DWG	DIMENSIONS
8	4	BATTEN	WOOD, SEE NOTES 4 & 5 PG. 1	2 X 4 X 29-3/4
7	AS REQ' D	TAPE	FILM BACKED ASTM D5486/D5486M	
6	48	PROTECTOR	BARRIER MATERIAL MIL-PRF-22191	10 X 12
5	6	SEAL	SEE NOTE 2	3/4
4	4	STRAPPING, LONGITUDINAL	SEE NOTE 1	3/4 X .031 (OR .035) X 13 FT 6
3	2	STRAPPING, LATERAL	SEE NOTE 1	3/4 X .031 (OR .035) X 14 FT 6
2	1	ADAPTER, PALLET, ADU-425/E (TOP & BOTTOM FRAMES)	30003-1103AS100	43-3/8 X 48
1	1	PALLET, MK 3 MOD 0	564200	40 X 48 X 4-3/4

LIST OF MATERIALS

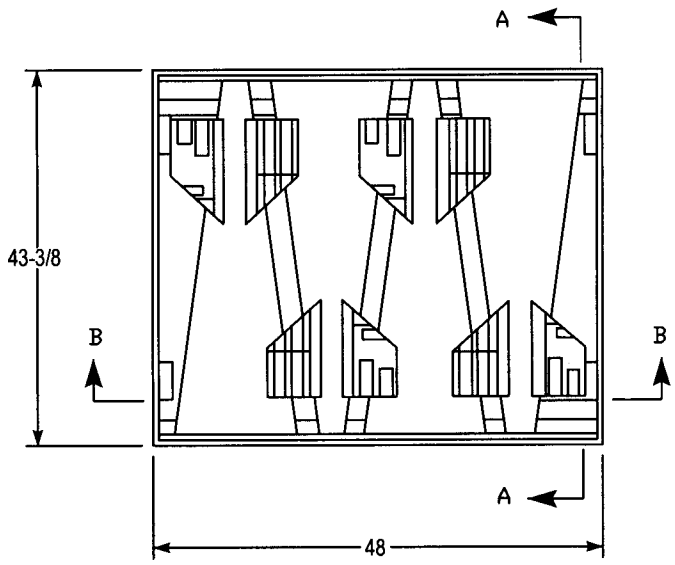

DETAIL B
(FIRST LAYER OF FINS IN BOTTOM FRAME)

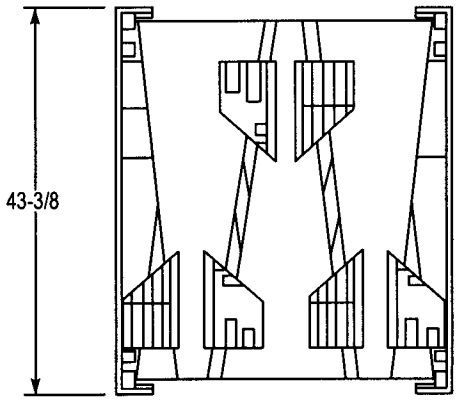

SECTION A-A

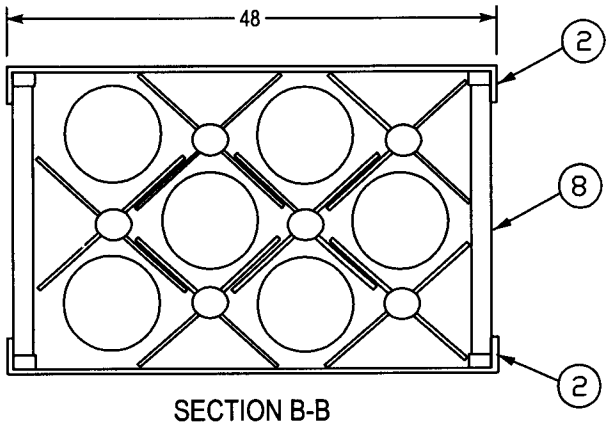

SECTION B-B

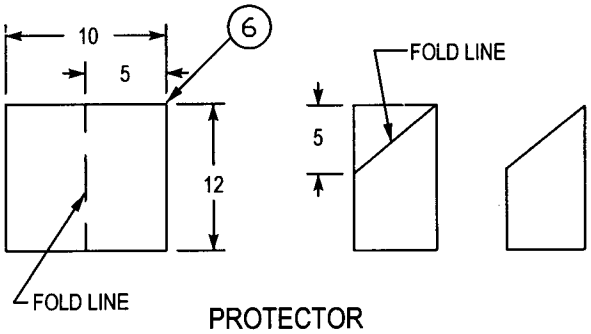

PROTECTOR

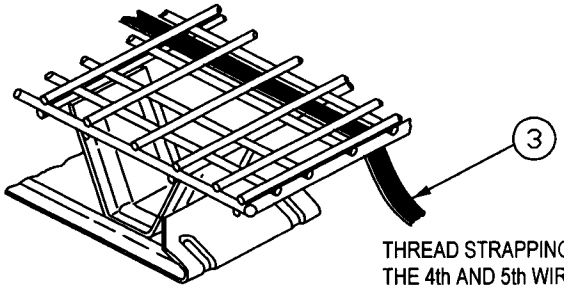

THREAD STRAPPING BETWEEN THE 4th AND 5th WIRE

DETAIL A

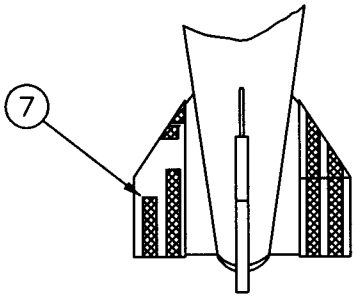

POSITION A FOLDED BARRIER MATERIAL PROTECTOR, ITEM 6, OVER EACH FIN ASSEMBLY AND SECURE IT WITH TAPE, ITEM 7, AS SHOWN.

NAVSEA DWG NO. 6214434	REV. A	SIZE A	CAGE CODE 53711	PAGE 3 OF 3

EXCEPTION: MARKING NOTE FOUND ON PAGE 2 OF DRAWING 6214434, REV A SHALL BE CHANGED TO THE FOLLOWING:

MARKING

1. IN ADDITION TO ANY SPECIAL MARKING REQUIRED BY CONTRACT OR ORDER, THE UNIT LOAD SHALL BE MARKED IN ACCORDANCE WITH 6214251 AND THE FOLLOWING NOTES FOR NAVY OWNED FINS AND IN ACCORDANCE WITH 28620-ACV00561 FOR AIR FORCE OWNED FINS.

2. BAR CODE LABELS SHALL BE APPLIED TO STRAPPING ON ADJACENT SIDES OF THE UNIT LOAD INSTEAD OF OPPOSITE ENDS.

3. APPLY NIIN AND LOT NUMBER BAR CODE LABELS AS FOLLOWS:

   A. NIIN BAR CODE LABEL: THE NINE-DIGIT NATIONAL ITEM IDENTIFICATION NUMBER (NIIN), OWNERSHIP CODE AND AMMUNITION CONDITION CODE SHALL BE ENCODED AS A SINGLE "MESSAGE". THE NIIN SHALL BE ENCODED WITHOUT THE DASHES. A SPACE (ENCODED) SHALL BE PLACED BETWEEN THE NIIN AND THE OWNERSHIP CODE AND BETWEEN THE OWNERSHIP CODE AND AMMUNITION CONDITION CODE.

      1) OWNERSHIP CODE: THE OWNERSHIP CODE SHALL BE AS FOLLOWS:
         1. FOR ARMY-OWNED AMMUNITION- "1".
         2. FOR MARINE CORPS-OWNED AMMUNITION- "4".
         3. FOR NAVY OWNED-AMMUNITION- "5".
         4. FOR AIR FORCE-OWNED AMMUNITION- "6".
         5. FOR COAST GUARD-OWNED AMMUNITION- "7".

      2) AMMUNITION CONDITION CODE: THE AMMUNITION CONDITION CODE (C/C) SHALL BE "A" FOR NEW PRODUCTION ASSETS.

   B. LOT NUMBER BAR CODE LABEL: THE LOT NUMBER, AND QUANTITY SHALL BE ENCODED ON THE SAME "MESSAGE". ON NEW PRODUCTION, THE AMMUNITION LOT NUMBER INCLUDING THE DASHES SHALL BE ENCODED AS SPECIFIED IN THE CONTRACT. A SPACE (ENCODED) SHALL BE PLACED BETWEEN THE LOT NUMBER QUANTITY.

4. BAR CODE MARKINGS:

   A. BAR CODE MARKINGS SHALL BE APPLIED BY MEANS OF A LABEL.

      1) LABELS SHALL MEET THE REQUIREMENTS FOR GRADE A, STYLE 1, COMPOSITION B LABEL AS SPECIFIED IN MIL-PRF-61002. THE PERFORMANCE REQUIREMENTS FOR SOLVENT AND DETERGENT RESISTANCE ARE NOT REQUIRED.

      2) LABELS SHALL BE THREE-QUARTERS (3/4) OF AN INCH IN HEIGHT.

      3) BAR CODE LABELS SHALL HAVE A WATERPROOF, UNTINTED/TRANSPARENT, PLASTIC, PROTECTIVE LAMINATE SUCH AS ASTM D5486, TYPE III, CLASS 2 TAPE OR EQUIVALENT PROTECTION, SHALL BE APPLIED TO OR SHALL BE INHERENT TO THE LABEL.

   B. THE BAR CODE SYMBOLOGY AND HUMAN READABLE INFORMATION (HRI) THAT ARE TO BE APPLIED SHOULD BE THE STANDARD DOD SYMBOLOGY AS DESCRIBED IN ANSI/AIM BC1 (UNIFORM SYMBOLOGY SPECIFICATION CODE 39). THE ANSI/AIM BC1 IS A DOCUMENT PUBLISHED BY AIM USA AND MAY BE OBTAINED DIRECTLY FROM AIM USA BY WRITING TO 634 ALPHA DRIVE, PITTSBURGH PA 15328-2802 OR CALL (412) 963-8588. THE HRI SHALL BE AN EXACT INTERPRETATION OF THE DATA ENCODED IN THE BAR CODE AND SHOULD NOT CONTAIN ANY SPACES OR DASHES, THE PREFERRED LOCATION FOR THE HRI IS BELOW THE BAR CODE MARKINGS.

   C. BAR CODE RESTRICTIONS:

      1) DENSITY OF THE BAR CODE SHALL BE 9.4 CHARACTERS PER INCH UNLESS OTHERWISE SPECIFIED.

      2) HEIGHT OF BAR CODE SHALL BE 0.25 INCH OR GREATER. THE HEIGHT OF THE BARS MAY EXTEND TO THE EDGE OF THE LABEL.

      3) DISTANCE BETWEEN THE BAR CODE AND THE HRI WILL BE BETWEEN 0.003 AND 0.010 INCH. THE PREFERRED DISTANCE IS 0.03.

      4) HEIGHT OF THE HRI SHALL BE BETWEEN 0.09 AND 0.15 INCH. THE PREFERRED HEIGHT IS 0.09.