REVISION			
LTR	DESCRIPTION	DATE	APPROVED
-	PRODUCT BASELINE	8/3/98	[illegible]

NOTES:

1. NAIL THROUGH FRONT SIDE ASSEMBLY AND BACK SIDE ASSEMBLY INTO END ASSEMBLY AS INDICATED USING 6d NAILS (20 REQUIRED).
2. NAIL THROUGH FRONT SIDE ASSEMBLY AND BACK SIDE ASSEMBLY INTO BOTTOM ASSEMBLY AS INDICATED USING 6d NAILS (10 REQUIRED).
3. NAIL THROUGH END ASSEMBLY INTO BOTTOM ASSEMBLY AS INDICATED USING 6d NAILS (10 REQUIRED).
4. ATTACH TWO CRADLES WITH FOUR 6d NAILS EACH. ATTACH TWO PLYWOOD PIECES TO INSIDE OF FRONT SIDE ASSEMBLY WITH TWO 3/4" STAPLES EACH. SEE SHEET 2 FOR POSITIONING OF CRADLES AND PLYWOOD PIECES.
5. ~~NAILS: FED SPEC FF-N-105, COMMON.~~
6. SECURE HINGES TO TOP ASSEMBLY AND BACK SIDE ASSEMBLY USING 3/4" NO. 7 SCREWS (12 REQUIRED). ALTERNATE HINGE: NATIONAL MFG. CO. 1-1/2" X 3/4" PLAIN STEEL CABINET HINGE.
7. INSERT HASP KNUCKLE INTO GROOVE IN TOP ASSEMBLY AND SECURE HASP TO FRONT CENTER OF TOP ASSEMBLY AS INDICATED USING NO. 7 SCREWS (3 REQUIRED).
8. ALIGN SWIVEL ASSEMBLY AT TOP CENTER OF FRONT SIDE ASSEMBLY AS INDICATED TO ALLOW CONNECTION WITH HASP AND SECURE WITH TWO NO. 7 SCREWS.
9. PLACE TOP EDGE OF PLYWOOD PIECE AGAINST BOTTOM EDGE OF SOFTWOOD PIECE. PLACE SURFACE MOUNT HANDLE MODEL NUMBER CCN-5305 FROM AUSTIN HARDWARE, INC. OR EQUIVALENT AT TOP EDGE OF PLYWOOD PIECE APPROXIMATELY 1 INCH FROM CORNER (2 PLACES) OR AT TOP CENTER OF PLYWOOD PIECE (1 PLACE). DRILL THROUGH PLYWOOD AND ATTACH HANDLES USING STAINLESS STEEL 1/2" 10-24 ROUND HEAD PHILLIPS SCREWS AND ZINC PLATED STEEL TEE NUTS (15 EACH REQUIRED). REPEAT PROCEDURE FOR BACK SIDE ASSEMBLY.
10. SCREWS: FED SPEC FF-N-105.
11. ALL DIMENSIONS GIVEN IN DRAWING ARE NOMINAL UNLESS OTHERWISE INDICATED.

Replace nails with screws.
Use RH #9 x 2" T-STAR YZ SCREWS.
FED SPEC FF-N-105 Applies.

12. Swivel Assembly + Hinge shown for information purposes (8796523, 8796520, 8796524) Contractor may substitute commercial items w/similar dimensions + materials.

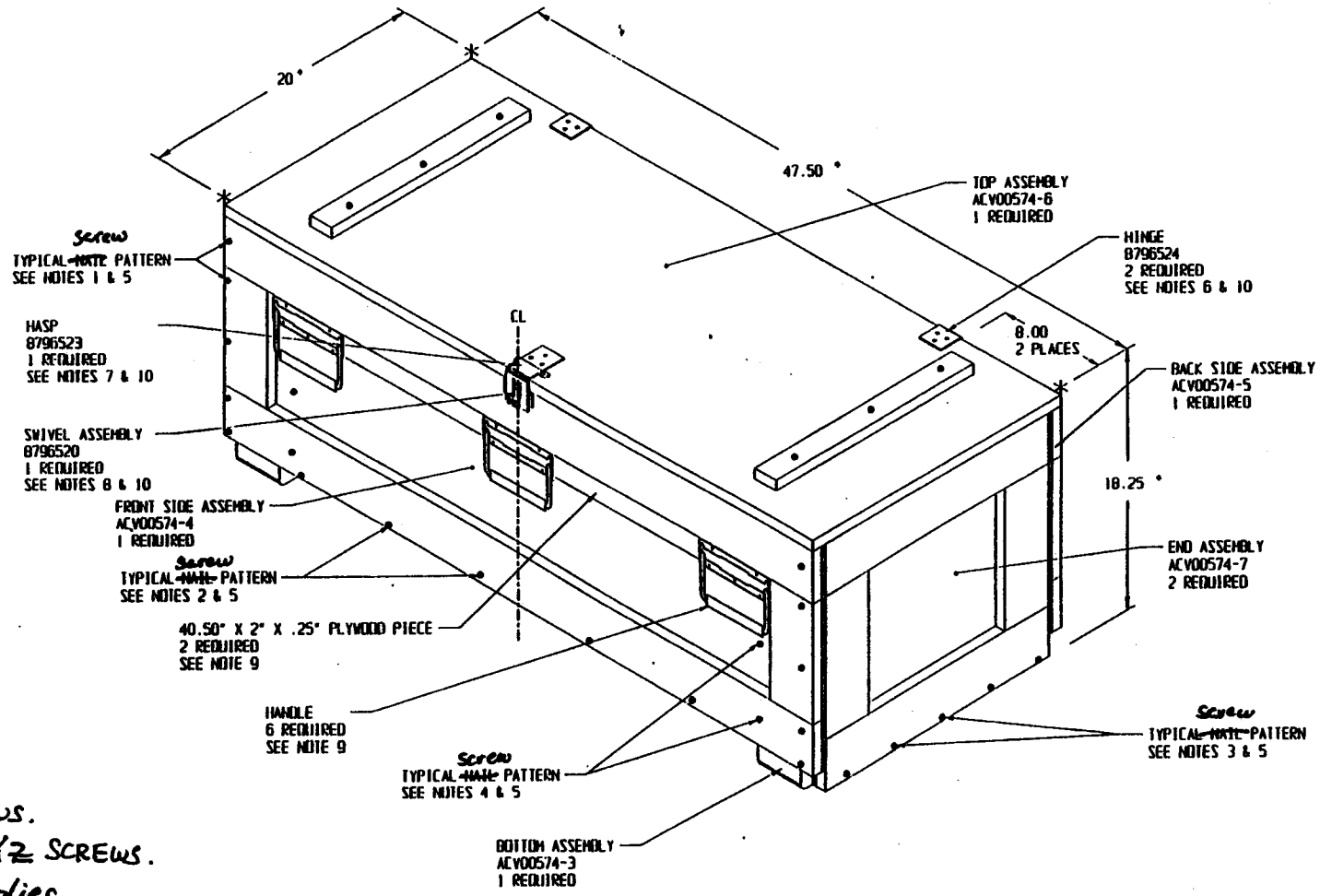

PART NO ACV00574

DISTRIBUTION STATEMENT A.

APPROVED FOR PUBLIC RELEASE; DISTRIBUTION IS UNLIMITED.

NEXT ASSY	USED ON	1 X 41 MRC	
APPLICATION			

UNLESS OTHERWISE NOTED DIMENSIONS ARE IN INCHES. BREAK SHARP CORNERS AND FACES.
TOLERANCES ON
FRACTIONS ±
DECIMALS ± .125
MATERIAL

DATE 97-04-17
DRAWN JFS
CHECKED
PROJECT JSURDYK

DESIGN ACTIVITY
U.S. ARMY
INDUSTRIAL OPERATIONS COMMAND
DEFENSE AMMUNITION CENTER
SAVANNA, ILLINOIS 61074-9630

SHIPPING CONTAINER
FOR 9 X 41 MRC

SIZE	CAGE CODE	
D	28620	ACV00574
SCALE	UNIT WT	SHEET 1 OF 7

REVISION			
LTR	DESCRIPTION	DATE	APPROVED
-	PRODUCT BASELINE	8/3/98	[illegible]

NOTES:

1. ATTACH AN APPROXIMATELY 9 INCH LONG MCMASTER-CARR SAFETY CHAIN PART NO. 3608T51 OR EQUIVALENT BY ITS ENDS TO PLYWOOD OF TOP ASSEMBLY AND BACK SIDE ASSEMBLY WITH 3/4" NO. 7 SCREWS (4 REQUIRED) AS INDICATED, SO THAT HINGES SWING OPEN 110°-130° WHEN SHIPPING CONTAINER IS OPENED.
2. ADDITIONAL PLYWOOD OR OTHER SUITABLE PACKAGING MATERIAL MAY BE ADDED TO AREAS AT EACH END OF THE MRC SHIPPING CONTAINER TO ACHIEVE A TIGHTER FIT.
3. CENTER ACV00576 OVER LOWER CRADLES BEFORE CLOSING SHIPPING CONTAINER.
4. NAIL THROUGH FRONT SIDE ASSEMBLY AND BACK SIDE ASSEMBLY INTO LOWER CRADLES AS INDICATED USING 6d NAILS (8 REQUIRED).
5. STAPLE PLYWOOD PIECE USING TWO 3/4" LONG BY 1/2" WIDE STAPLES (4 REQUIRED).
6. SCREWS: FED SPEC FF-N-105.
7. NAILS: FED SPEC FF-N-105; COMMON.
8. STAPLES: ASTM F1667-95; FED SPEC FF-N-105B.
9. PLYWOOD: VOLUNTARY PRODUCT STANDARD PS 1-83 FOR CONSTRUCTION AND INDUSTRIAL PLYWOOD GRADE A-C.

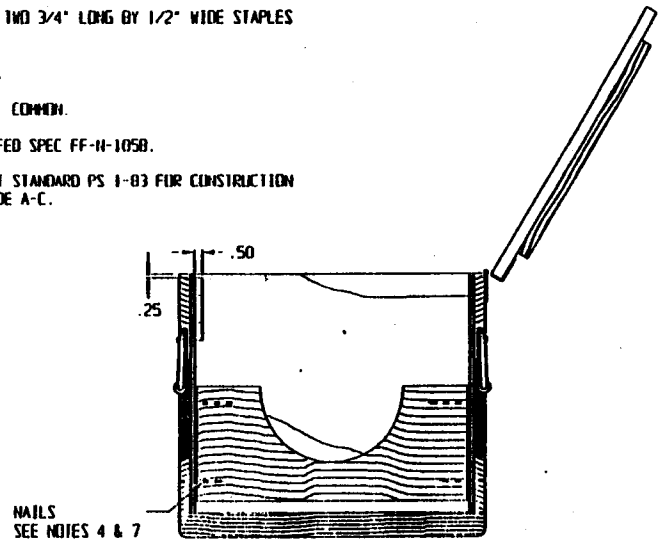

VIEW A-A

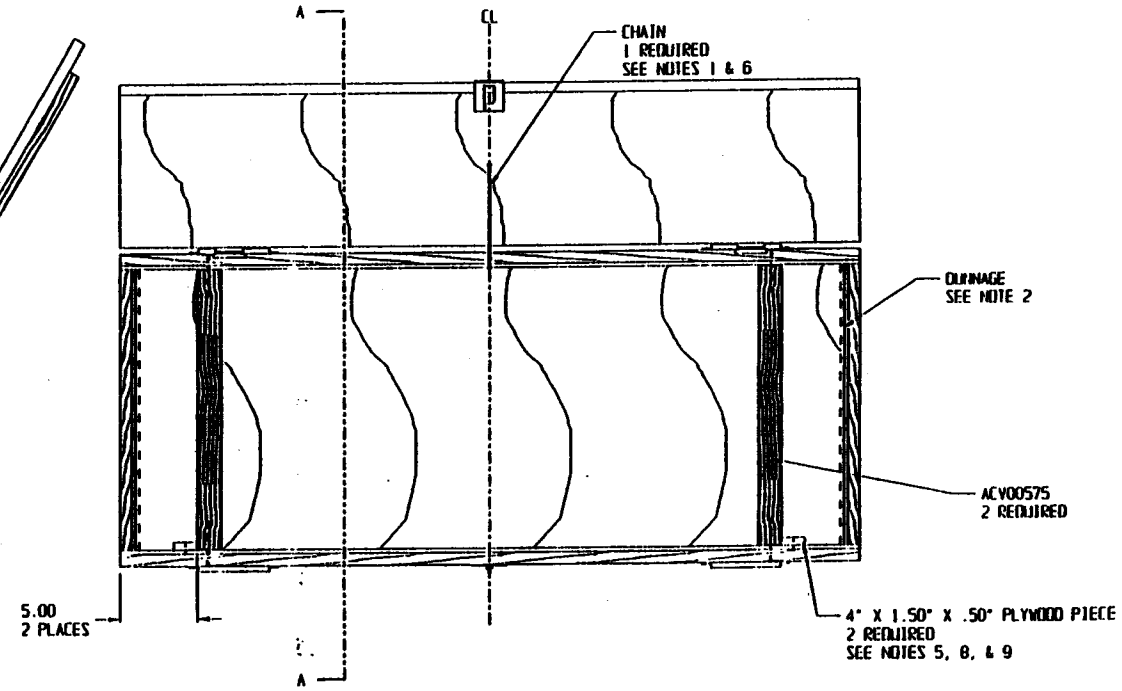

CROSS-SECTIONAL VIEW
PART NO ACV00574

DISTRIBUTION STATEMENT A.

APPROVED FOR PUBLIC RELEASE;
DISTRIBUTION IS UNLIMITED.

NEXT ASSY	9 X 41 MRC USED ON	UNLESS OTHERWISE NOTED DIMENSIONS ARE IN INCHES. BREAK SHARP CORNERS AND EDGES. TOLERANCES ON FRACTIONS ± SECTIONS ± 1.125	DATE 97-04-17	DESIGN ACTIVITY U.S. ARMY INDUSTRIAL OPERATIONS COMMAND DEFENSE AMMUNITION CENTER SAVANNA, ILLINOIS 61074-9630
APPLICATION			JFS / JSUROYK	SHIPPING CONTAINER FOR 9 X 41 MRC
				SIZE D / CAGE CODE 28620 / ACV00574
				SCALE / UNIT WT / SHEET 2 of 7

REVISION			
LTR	DESCRIPTION	DATE	APPROVED
-	PRODUCT BASELINE	7/3/90	

NOTES:

1. NAIL THROUGH PLYWOOD INTO SOFTWOOD AS INDICATED USING 6d NAILS (12 REQUIRED).
2. NAILS: FED SPEC FF-N-105; COMMON.
3. NAILS MUST BE AT LEAST 1/2" FROM ANY EDGE.
4. PLYWOOD: VOLUNTARY PRODUCT STANDARD PS 1-83 FOR CONSTRUCTION AND INDUSTRIAL PLYWOOD GRADE A-C.
5. LUMBER: FED SPEC MM-L-751; DOUGLAS FIR OR COMPARABLE LUMBER WITH STRAIGHT GRAIN AND FREE FROM MATERIAL DEFECTS.

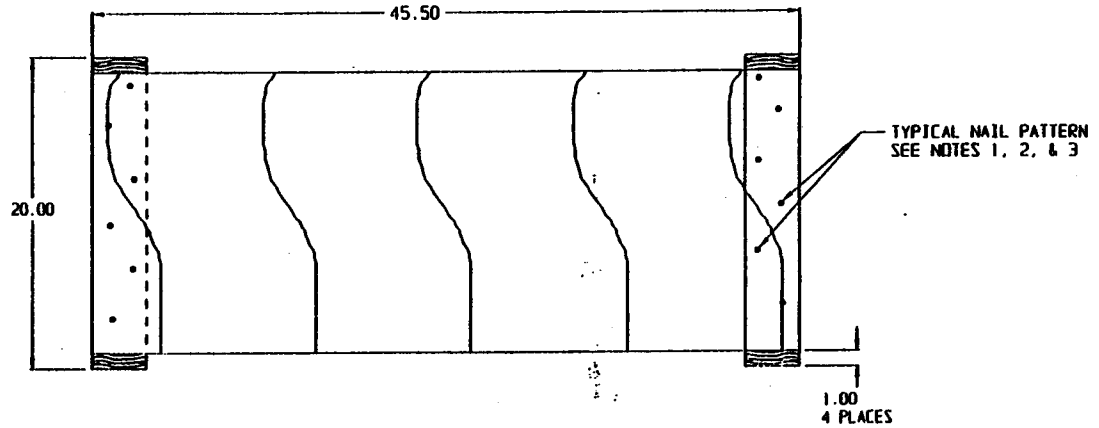

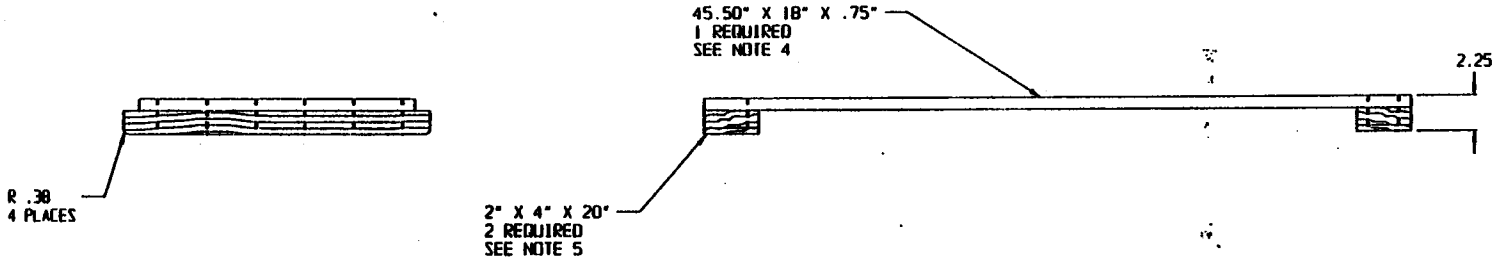

BOTTOM ASSEMBLY
PART NO ACV00574-3

1 REQUIRED

DISTRIBUTION STATEMENT A.

APPROVED FOR PUBLIC RELEASE;
DISTRIBUTION IS UNLIMITED.

NEXT ASSY	USED ON
ACV00574	9 X 41 MRC

APPLICATION

UNLESS OTHERWISE NOTED DIMENSIONS ARE IN INCHES. BREAK SHARP CORNERS AND EDGES.
TOLERANCES ON
FRACTIONS ±
DECIMALS ±.125
MATERIAL

DATE 97-04-17
DRAWN JFS
ENGINEER
PREPARED JSURDYK

DESIGN ACTIVITY
U.S. ARMY
INDUSTRIAL OPERATIONS COMMAND
DEFENSE AMMUNITION CENTER
SAVANNA, ILLINOIS 61074-9639

SHIPPING CONTAINER
FOR 9 X 41 MRC

SIZE	CAGE CODE	
D	28620	ACV00574

SCALE | UNIT WT | SHEET 3 OF 7

REVISION			
LTR	DESCRIPTION	DATE	APPROVED
-	PRODUCT BASELINE	8/3/90	

NOTES:

1. PRIOR TO STAPLING, GLUE THE SOFTWOOD PIECES TO THE PLYWOOD WITH CARPENTERS WOOD GLUE OR ADHESIVE MEETING STANDARD MMM-A-187B. FASTEN STAPLES THROUGH THE PLYWOOD INTO THE SOFTWOOD USING A STAPLE GUN AND 16 GAUGE 3/4" LONG BY 1/2" WIDE STAPLES. USE ONE STAPLE FOR APPROXIMATELY EVERY 2"-3" OF BOARD.
2. STAPLES: ASTM F1667-95; FED SPEC 1058.
3. PLYWOOD: VOLUNTARY PRODUCT STANDARD PS 1-83 FOR CONSTRUCTION AND INDUSTRIAL PLYWOOD GRADE A-C.
4. LUMBER: FED SPEC MM-L-751; DOUGLAS FIR OR COMPARABLE LUMBER WITH STRAIGHT GRAIN AND FREE FROM MATERIAL DEFECTS.
5. CUT TWO 2" X 1/4" X 1/4" NOTCHES AS INDICATED TO ACCOMMODATE HINGE KNUCKLES. IF ALTERNATE HINGE IS USED, NOTCHES ARE NOT REQUIRED.

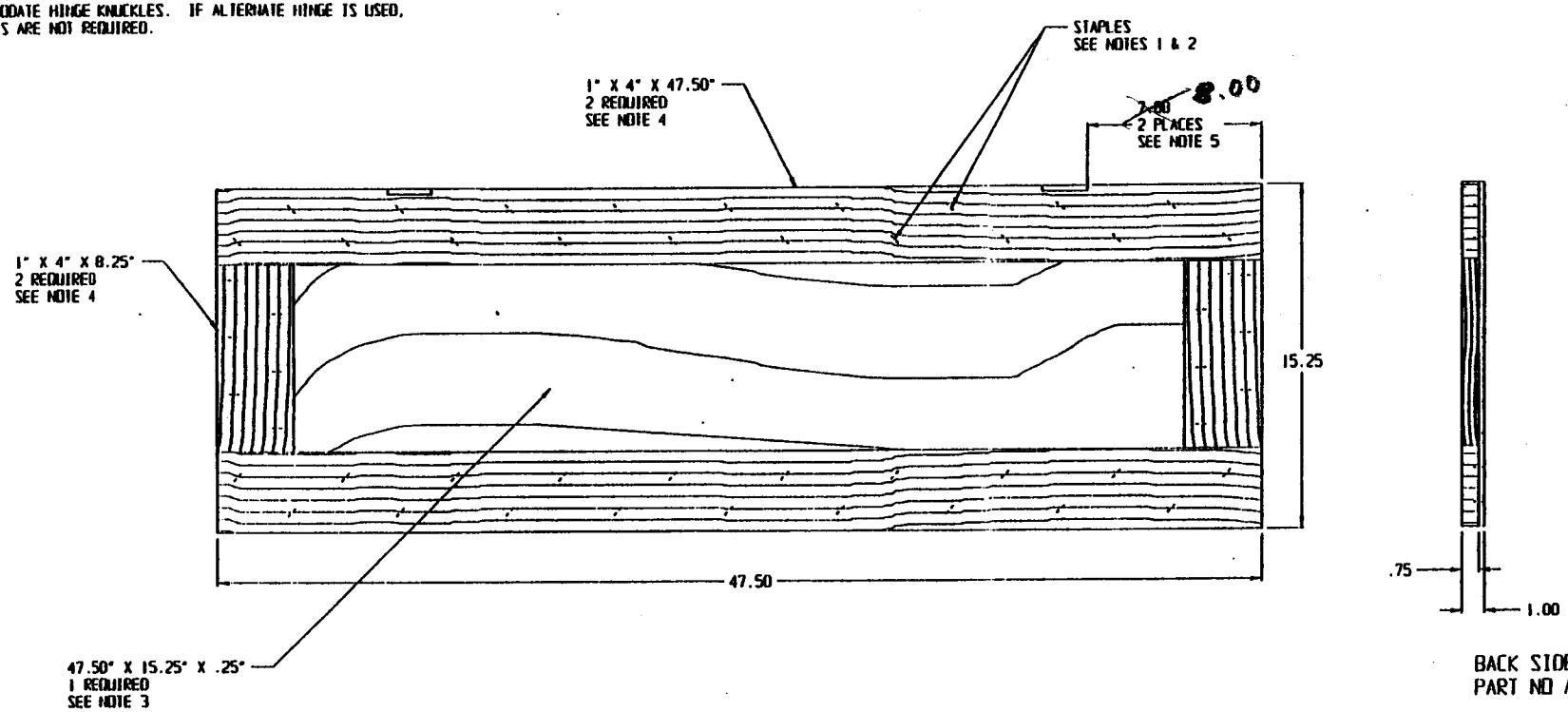

BACK SIDE ASSEMBLY
PART NO ACV00574-5

1 REQUIRED

DISTRIBUTION STATEMENT A.

APPROVED FOR PUBLIC RELEASE; DISTRIBUTION IS UNLIMITED.

ACV00574 NEXT ASSY	9 X 41 HRC USED ON
APPLICATION	

UNLESS OTHERWISE NOTED DIMENSIONS ARE IN INCHES. BREAK SHARP CORNERS AND EDGES.
TOLERANCES ON
FRACTIONS ±
DECIMALS ±.125
MATERIAL

DATE 97-04-17
DRAWN JFS
PROJ ENGR JSLURDYK

DESIGN ACTIVITY
U.S. ARMY
INDUSTRIAL OPERATIONS COMMAND
DEFENSE AMMUNITION CENTER
SAVANNA, ILLINOIS 61074-9639

SHIPPING CONTAINER
FOR 9 X 41 HRC

SIZE	CAGE CODE	
D	28620	ACV00574
SCALE	UNIT VI	SHEET 5 OF 7

REVISION			
LTR	DESCRIPTION	DATE	APPROVED
-	PRODUCT BASELINE	[illegible]	[illegible]

NOTES:

1. PRIOR TO STAPLING, GLUE THE SOFTWOOD PIECES TO THE PLYWOOD WITH CARPENTERS WOOD GLUE OR ADHESIVE MEETING STANDARD MMM-A-187B. FASTEN STAPLES THROUGH THE PLYWOOD INTO THE SOFTWOOD USING A STAPLE GUN AND 16 GAUGE 3/4" LONG BY 1/2" WIDE STAPLES. USE ONE STAPLE FOR APPROXIMATELY EVERY 2"-3" OF BOARD.
2. STAPLES: ASTM F1667-95; FED SPEC 1058.
3. PLYWOOD: VOLUNTARY PRODUCT STANDARD PS 1-83 FOR CONSTRUCTION AND INDUSTRIAL PLYWOOD GRADE A-C.
4. LUMBER: FED SPEC MM-L-751: DOUGLAS FIR OR COMPARABLE LUMBER WITH STRAIGHT GRAIN AND FREE FROM MATERIAL DEFECTS.

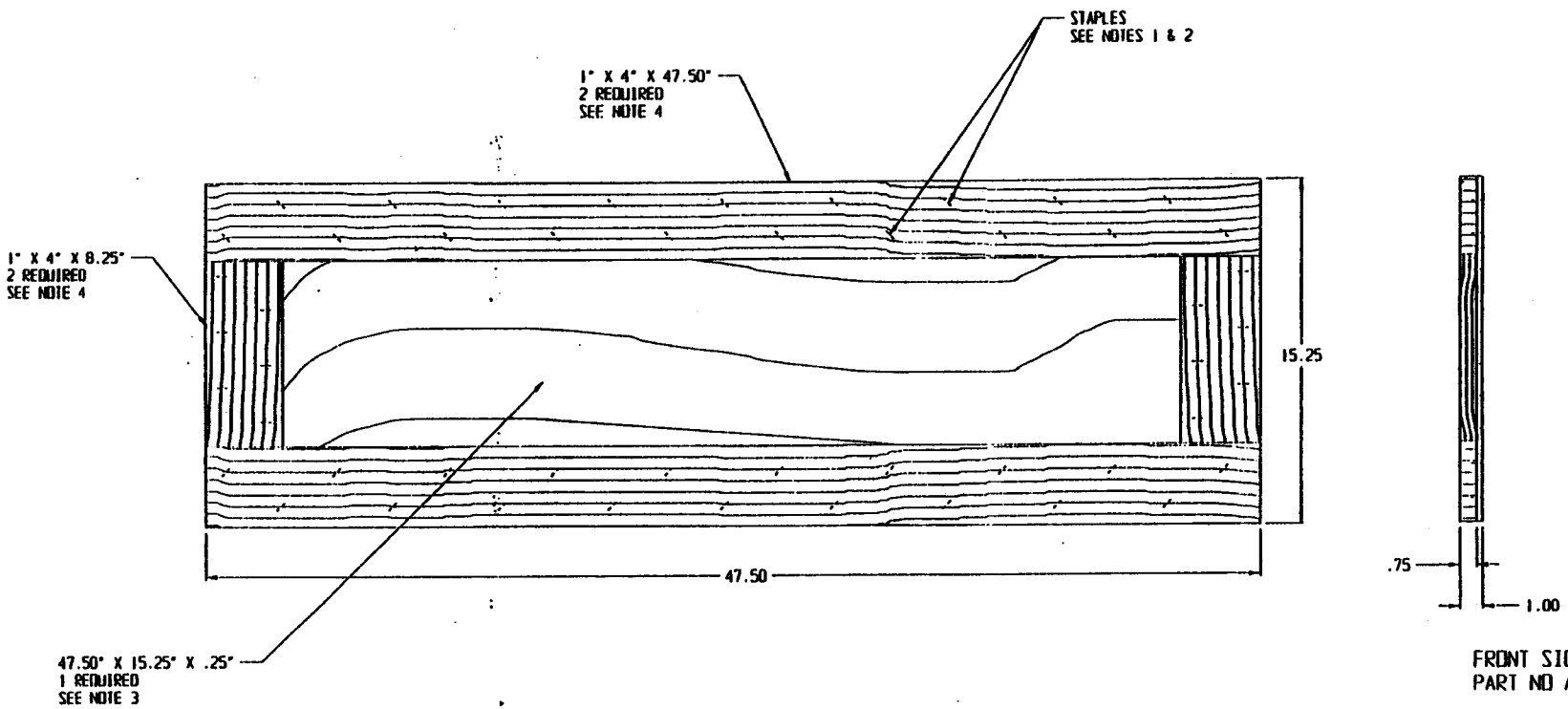

FRONT SIDE ASSEMBLY
PART NO ACV00574-4

1 REQUIRED

DISTRIBUTION STATEMENT A.

APPROVED FOR PUBLIC RELEASE;
DISTRIBUTION IS UNLIMITED.

ACV00574	9 X 41 MRC
NEXT ASSY	USED ON
APPLICATION	

UNLESS OTHERWISE NOTED DIMENSIONS ARE IN INCHES. BREAK SHARP CORNERS AND EDGES.
TOLERANCES ON
FRACTIONS ±
DECIMALS ±.125
MATERIAL

DATE 97-04-17
DRAWN JFS
CHECKED
PROJECT JSURDYK

DESIGN ACTIVITY
U.S. ARMY
INDUSTRIAL OPERATIONS COMMAND
DEFENSE AMMUNITION CENTER
SAVANNA, ILLINOIS 61074-9630

SHIPPING CONTAINER
FOR 9 X 41 MRC

SIZE	CAGE CODE	
D	28620	ACV00574
SCALE	UNIT WT	SHEET 4 OF 7

REVISION			
LTR	DESCRIPTION	DATE	APPROVED
-	PRODUCT BASELINE	8/3/98	

NOTES:

1. PRIOR TO STAPLING, GLUE THE SOFTWOOD PIECES TO THE PLYWOOD WITH CARPENTERS WOOD GLUE OR ADHESIVE MEETING STANDARD MMM-A-187B. FASTEN STAPLES THROUGH THE PLYWOOD INTO THE SOFTWOOD USING A STAPLE GUN AND 16 GAUGE 3/4" LONG BY 1/2" WIDE STAPLES. USE ONE STAPLE FOR APPROXIMATELY EVERY 2" TO 3" OF BOARD.
2. STAPLES: ASTM F1667-95. FF-N-105B.
3. PLYWOOD: VOLUNTARY PRODUCT STANDARD PS 1-83 FOR CONSTRUCTION AND INDUSTRIAL PLYWOOD GRADE A-C.
4. LUMBER: FED SPEC MM-L-751; DOUGLAS FIR OR COMPARABLE LUMBER WITH STRAIGHT GRAIN AND FREE FROM MATERIAL DEFECTS.

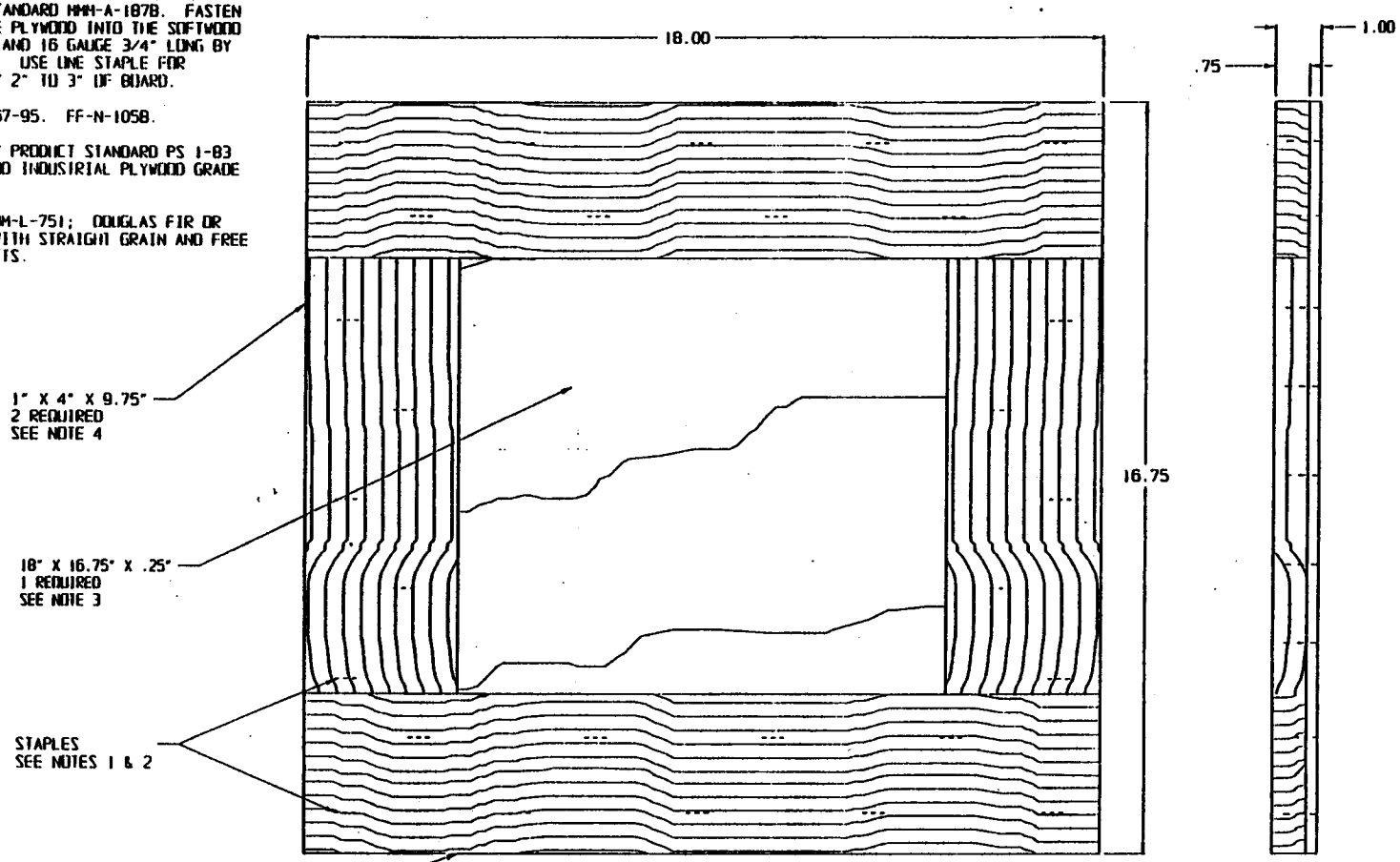

2 REQUIRED

END ASSEMBLY
PART NO ACV00574-7

DISTRIBUTION STATEMENT A.

APPROVED FOR PUBLIC RELEASE;
DISTRIBUTION IS UNLIMITED.

ACV00574	9 X 41 MRC
NEXT ASSY	USED ON
APPLICATION	

UNLESS OTHERWISE NOTED DIMENSIONS ARE IN INCHES. BREAK SHARP CORNERS AND EDGES.
TOLERANCES ON
FRACTIONS ±
DECIMALS ±.125
MATERIAL

DATE 97-04-17
DRAWN JFS
CHECKED
PREPARED JSURDYK

DESIGN ACTIVITY
U.S. ARMY
INDUSTRIAL OPERATIONS COMMAND
DEFENSE AMMUNITION CENTER
SAVANNA, ILLINOIS 61074-9639

SHIPPING CONTAINER
FOR 9 X 41 MRC

SIZE	CAGE CODE	
D	28620	ACV00574
SCALE	UNIT WT	SHEET 7 OF 7

REVISION			
LTR	DESCRIPTION	DATE	APPROVED
-	PRODUCT BASELINE	9/2/93	

NOTES:

1. NAIL THROUGH SOFTWOOD INTO PLYWOOD AS INDICATED USING 3d NAILS (6 REQUIRED).
2. NAILS: FED SPEC FF-N-105; COMMON.
3. NAILS MUST BE AT LEAST 1/2" FROM ANY EDGE.
4. PLYWOOD: VOLUNTARY PRODUCT STANDARD PS 1-83 FOR CONSTRUCTION AND INDUSTRIAL PLYWOOD GRADE A-C.
5. LUMBER: FED SPEC MM-L-751; DOUGLAS FIR OR COMPARABLE LUMBER WITH STRAIGHT GRAIN AND FREE FROM MATERIAL DEFECTS.

~~CUT 2 1/2" X 1/2" X 1/4" NOTCH AS INDICATED TO ACCOMMODATE HASP KNUCKLE.~~

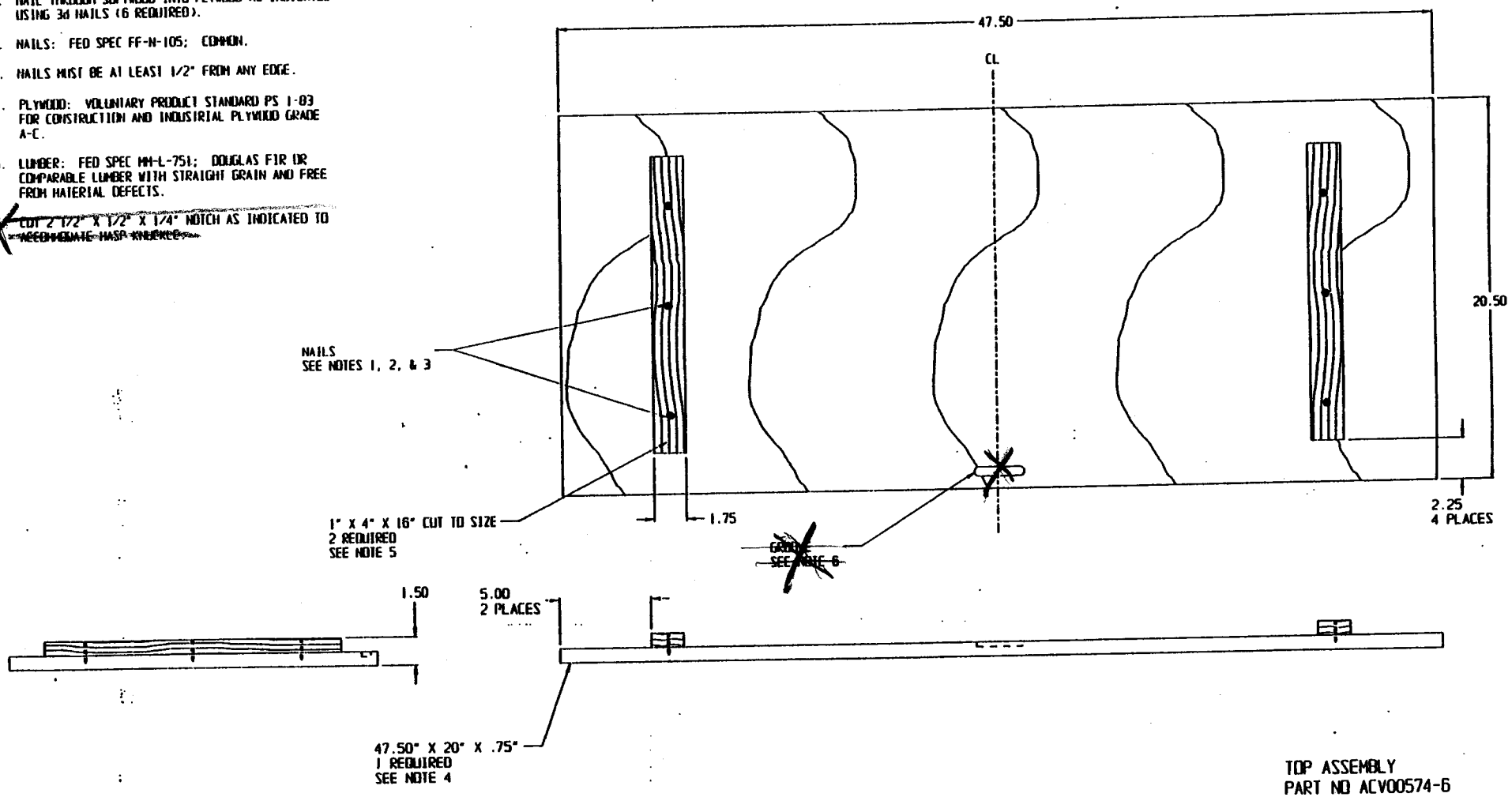

1 REQUIRED

TOP ASSEMBLY
PART NO ACV00574-6

DISTRIBUTION STATEMENT A.

APPROVED FOR PUBLIC RELEASE; DISTRIBUTION IS UNLIMITED.

ACV00574 NEXT ASSY	9 X 41 MRC USED ON
APPLICATION	

UNLESS OTHERWISE NOTED DIMENSIONS ARE IN INCHES. BREAK SHARP CORNERS AND EDGES.
TOLERANCES ON
FRACTIONS ±
DECIMALS ±.125
MATERIAL

97-04-17

DRAWN	CHECKED	PROJ ENGR
JFS		JSUROYK

DESIGN ACTIVITY
U.S. ARMY
INDUSTRIAL OPERATIONS COMMAND
DEFENSE AMMUNITION CENTER
SAVANNA, ILLINOIS 61074-9639

SHIPPING CONTAINER
FOR 9 X 41 MRC

SIZE	CAGE CODE	
D	28620	ACV00574
SCALE	UNIT WT	SHEET 6 OF 7

NOTES:

1. NAIL AS INDICATED USING 10d NAILS (4 REQUIRED).
2. NAILS: FED SPEC FF-N-105; COMMON.
3. NAILS MUST BE AT LEAST 1/2" FROM ANY EDGE.
4. LUMBER: FED SPEC MM-L-751; DOUGLAS FIR OR COMPARABLE LUMBER WITH STRAIGHT GRAIN AND FREE FROM MATERIAL DEFECTS.
5. ALL DIMENSIONS GIVEN IN DRAWING ARE NOMINAL UNLESS OTHERWISE INDICATED.

REVISION			
LTR	DESCRIPTION	DATE	APP
-	PRODUCT BASELINE	3/3/98	J. Surdyk

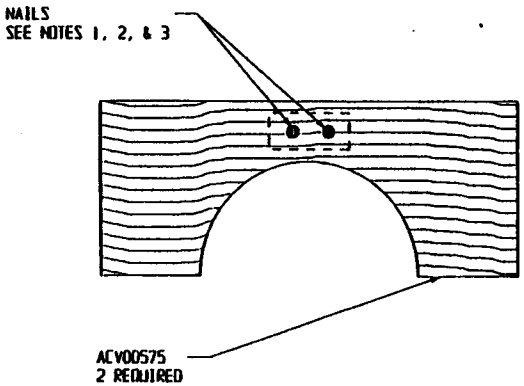

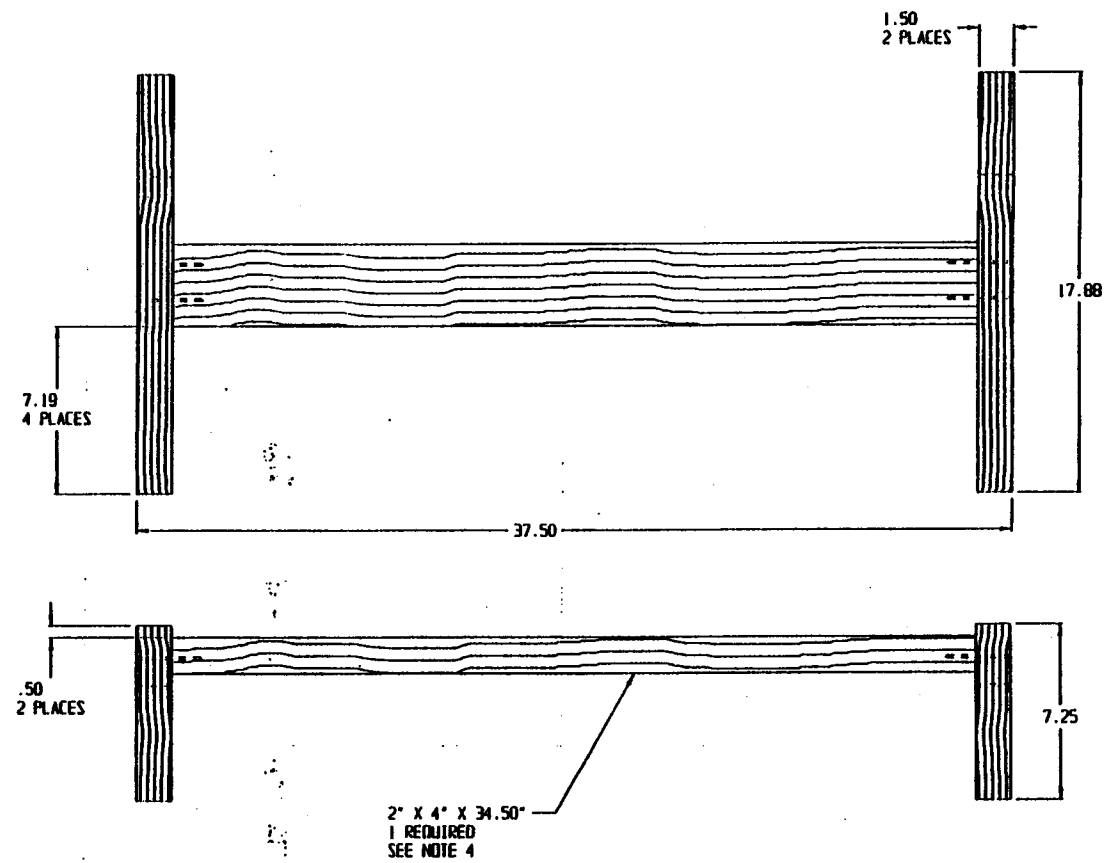

PART NO ACV00576

DISTRIBUTION STATEMENT A.

APPROVED FOR PUBLIC RELEASE; DISTRIBUTION IS UNLIMITED.

ACV00574	9 X 41 MRC	UNLESS OTHERWISE NOTED DIMENSIONS ARE IN INCHES. BREAK SHARP CORNERS AND EDGES. TOLERANCES ON FRACTIONS 1 DECIMALS 1.125	DATE 97-04-17	DESIGN ACTIVITY U.S. ARMY INDUSTRIAL OPERATIONS COMMAND DEFENSE AMMUNITION CENTER SAVANNA, ILLINOIS 61074-9630
NEXT ASSY	USED ON	MATERIAL	DRAWN JFS / CHECKED / PROJECT JSURDYK	UPPER CRADLE ASSEMBLY FOR SHIPPING CONTAINER FOR 9 X 41 MRC
APPLICATION				SIZE D / CAGE CODE 28620 / ACV00576
				SCALE / UNIT WT / SHEET 1 OF 1

REVISION			
LTR	DESCRIPTION	DATE	APPROVED
-	PRODUCT BASELINE	8/3/98	[signature]

NOTES:

1. LUMBER: FED SPEC MM-L-751; DOUGLAS FIR OR COMPARABLE LUMBER WITH STRAIGHT GRAIN AND FREE FROM MATERIAL DEFECTS.
2. ALL DIMENSIONS GIVEN IN DRAWING ARE NOMINAL UNLESS OTHERWISE INDICATED.

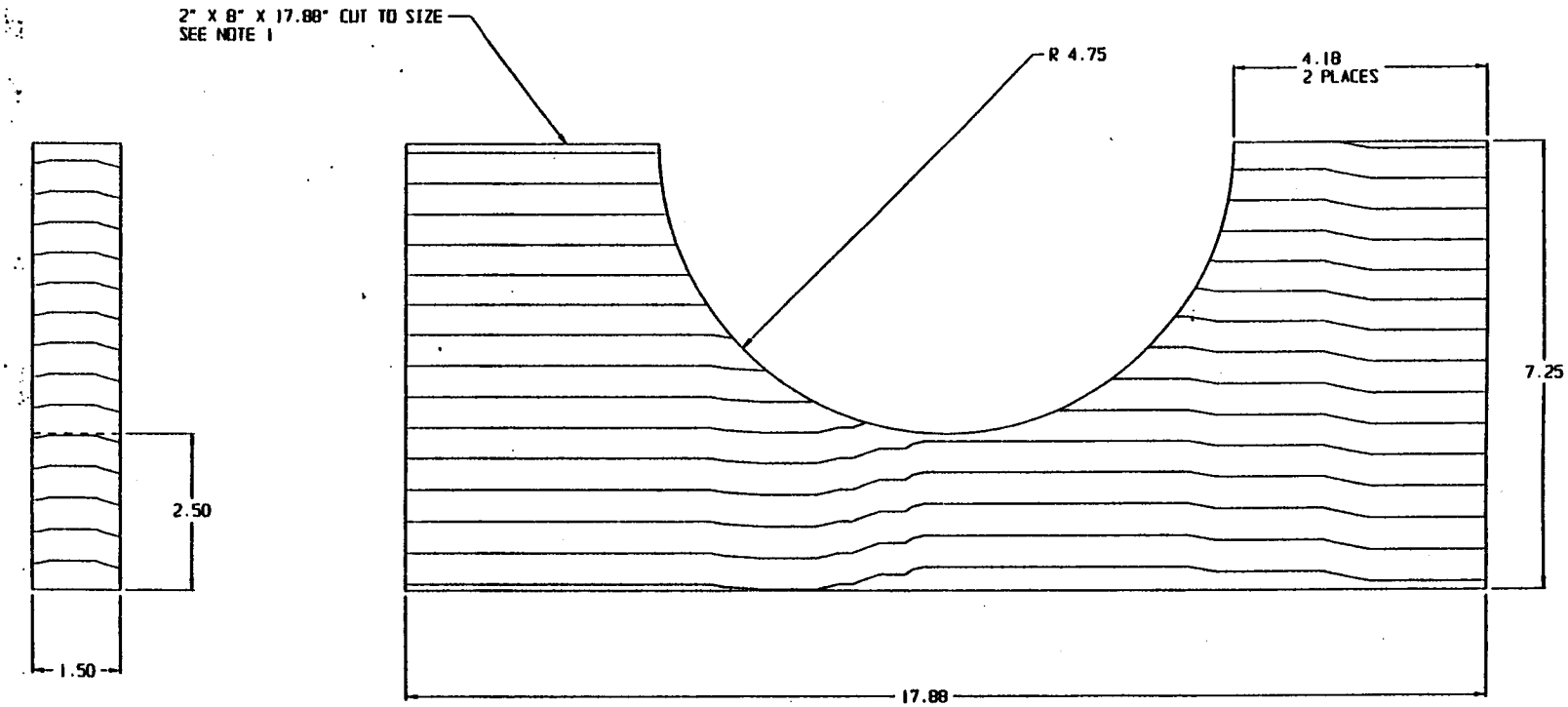

PART NO ACV00575

4 REQUIRED

DISTRIBUTION STATEMENT A.

APPROVED FOR PUBLIC RELEASE; DISTRIBUTION IS UNLIMITED.

ACV00574	9 X 41 MRC
NEXT ASSY	USED ON
APPLICATION	

UNLESS OTHERWISE NOTED DIMENSIONS ARE IN INCHES. BREAK SHARP CORNERS AND EDGES.
TOLERANCES ON
FRACTIONS ± 1
DECIMALS ± .125
MATERIAL

DATE 97-04-17
JFS | JSUROYK

DESIGN ACTIVITY
U.S. ARMY
INDUSTRIAL OPERATIONS COMMAND
DEFENSE AMMUNITION CENTER
SAVANNA, ILLINOIS 61074-9639

CRADLE OF SHIPPING CONTAINER FOR 9 X 41 MRC

SIZE	CAGE CODE	
D	28620	ACV00575
SCALE	UNIT WT	SHEET 1 OF 1

NOTES:

1. STENCIL IN BLACK INK APPROXIMATELY 1/2 TO 3/4 INCH HIGH LETTERING.

REVISION			
LTR	DESCRIPTION	DATE	APPROVED
-	PRODUCT BASELINE	03-06-02	

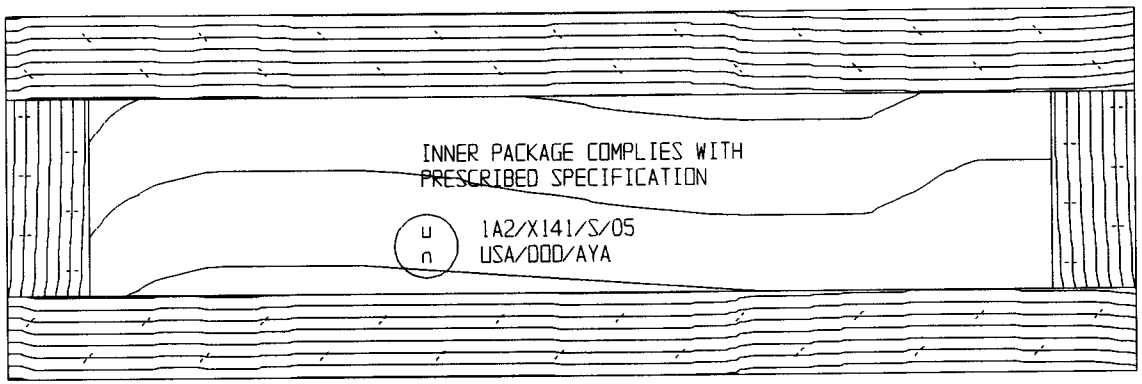

BOX FRONT SIDE ASSEMBLY

1 REQUIRED

DISTRIBUTION STATEMENT A.

APPROVED FOR PUBLIC RELEASE;
DISTRIBUTION IS UNLIMITED.

DESIGN ACTIVITY U.S. ARMY EDGEWOOD CHEMICAL BIOLOGICAL COMMAND ROCK ISLAND ARSENAL ROCK ISLAND, ILLINOIS 61299		
SHIPPING CONTAINER FOR 9x41 INCH MULTIPLE ROUND CONTAINER		
SIZE D	CAGE CODE 81361	M941BOXMARK
SCALE #/#	UNIT WT	SHEET 1 of 3

NOTES:

1. STENCIL IN BLACK INK IN 1/2 INCH TO 3/4 INCH HIGH LETTERING.

REVISION			
LTR	DESCRIPTION	DATE	APPROVED
-	PRODUCT BASELINE	05-??-??	

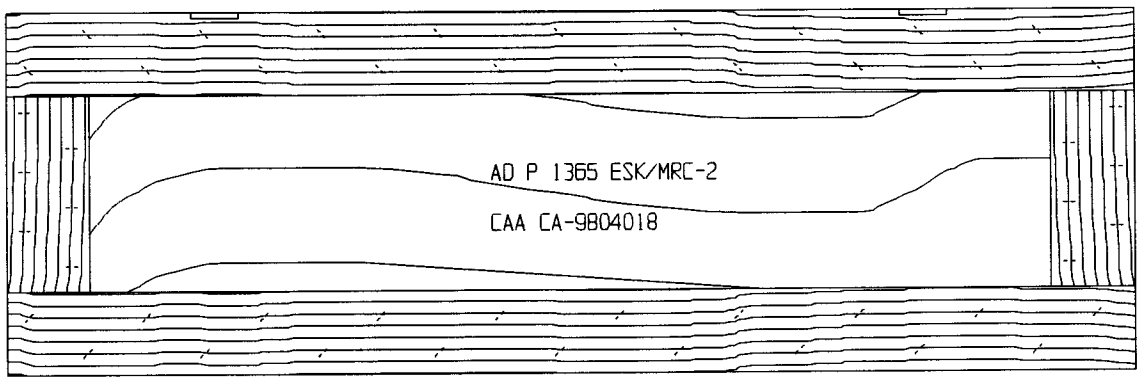

BOX BACK SIDE ASSEMBLY

DESIGN ACTIVITY
U.S. ARMY
EDGEWOOD CHEMICAL BIOLOGICAL CENTER
ROCK ISLAND ARSENAL
ROCK ISLAND, ILLINOIS 61299

SHIPPING CONTAINER FOR 9x41 INCH MULTIPLE ROUND CONTAINER

SIZE	CAGE CODE	
D	81361	M9418OXMARK
SCALE #/#	UNIT WT	SHEET 2 OF 3

DISTRIBUTION STATEMENT A.

APPROVED FOR PUBLIC RELEASE;
DISTRIBUTION IS UNLIMITED.

REVISION			
LTR	DESCRIPTION	DATE	APPROVED
-	PRODUCT BASELINE	05-??-??	

NOTES:

1. STENCIL IN BLACK INK 1/2 TO 3/4 INCHES HIGH A SERIAL NUMBER ON EACH END IN THE FORMAT

KK ### PB

WHERE ### STARTS WITH 001 FOR THE FIRST SHIPPING BOX AND RUNS THROUGH 550 FOR THE LAST.

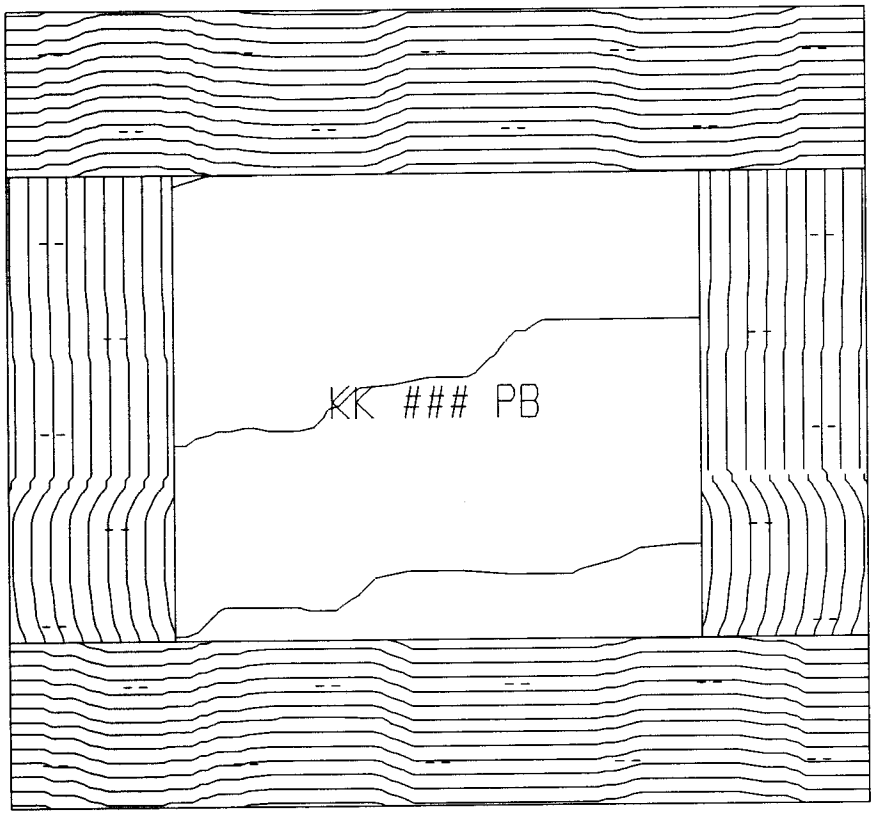

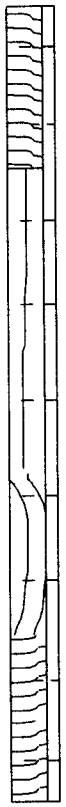

2 REQUIRED

BOX END ASSEMBLY

DISTRIBUTION STATEMENT A.

APPROVED FOR PUBLIC RELEASE;
DISTRIBUTION IS UNLIMITED.

DESIGN ACTIVITY
U.S. ARMY
EDGEWOOD CHEMICAL BIOLOGICAL CENTER
ROCK ISLAND ARSENAL
ROCK ISLAND, ILLINOIS 61299

SHIPPING CONTAINER FOR 9x41 INCH MULTIPLE ROUND CONTAINER

SIZE	CAGE CODE	
D	81361	M941BOXMARK

SCALE #/# | UNIT WT | SHEET 3 OF 3

8796520_19203_-_E_0001_0001_U_N
February 25, 2004 7:58 AM

00 FORM 1176

NOTICE.—When Government drawings, specifications, or other data are used for any purpose other than in connection with a definitely related Government procurement operation, the United States Government thereby incurs no responsibility nor any obligation whatsoever; and the fact that the Government may have formulated, furnished, or in any way supplied the said drawings, specifications or other data is not to be regarded by implication or otherwise as in any manner licensing the holder or any other person or corporation, or conveying any rights or permission to manufacture, use, or sell any patented invention that may in any way be related thereto.

REVISIONS

SYM	DESCRIPTION	DATE	APPROVAL
A	REDRAWN. FORMERLY SHOWN ON DRAWING A8796520	7-22-57	
B	EO PA 911	12-5-57	
C	EO PA-8896	11-17-61	
D	EOPA 48912-4/7-28-67	7-28-67	
E	EOPA 50315-4/11-1-67	11-20-67	

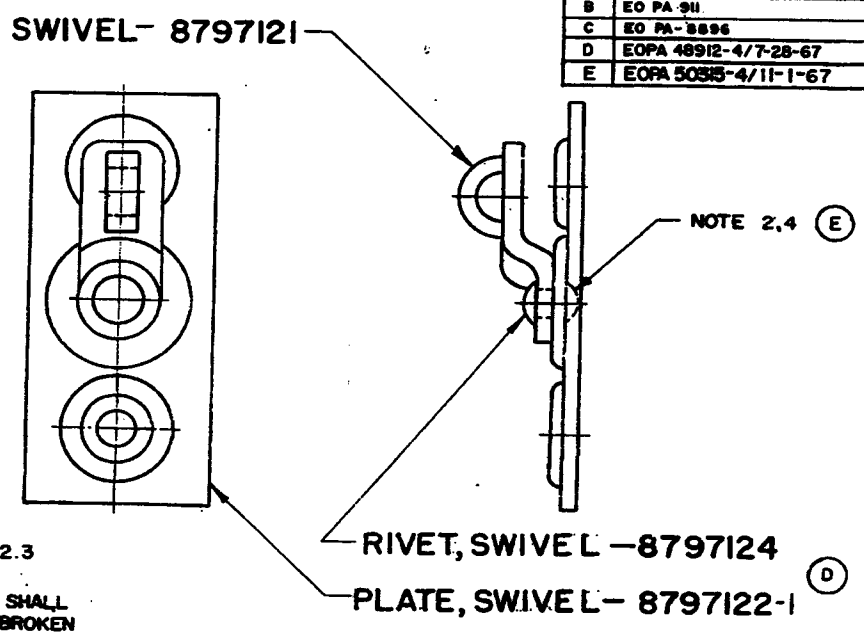

NOTES:-

(C) 1-SPEC MIL-A-2550 APPLIES.

(B) 2-PEEN OR STAKE TO PROVIDE A RESISTANCE TO WITHDRAWAL OF 180 LBS MIN. SWIVEL MUST MOVE FREELY AFTER ASSEMBLY.

3-PROTECTIVE FINISH:- FINISH NO. 1.1.2.3 OR 1.9.2.3 OF MIL-STD-171.

(E) 4-WHEN HOLLOW END RIVET IS USED, END SHALL BE ROLLED OUTWARD WITH SMOOTH UNBROKEN FINISH AND SHALL MEET OTHER REQUIREMENTS OF NOTE 2.

FOR ASSOCIATED LIST SEE 8796520

ORDNANCE PART NO. 8796520

(D) PACKING BOX

SEE ENGINEERING RECORDS

NEXT ASSY	USED ON
APPLICATION	
DO NOT	APPLY PART NO.

PHYSICAL PROPERTIES: YP, TS, EL2, RA, BH, RH

UNLESS OTHERWISE SPECIFIED
DIMENSIONS ARE IN INCHES
TOLERANCES ON FRACTIONS DECIMALS ANGLES

MATERIAL

HEAT TREATMENT

FINAL PROTECTIVE FINISH: SEE NOTE 3

ORIGINAL DATE OF DRAWING OCT 12, 1956

DRAFTSMAN A.B. CHECKER
TRACER A.B. CHECKER
ENGR ENGR

SUBMITTED G.R. Buck ORD ENGR, ORD CORPS

APPROVED BY ORDER OF THE CHIEF OF ORDNANCE ORD CORPS

SWIVEL ASSEMBLY

SCALE 2/1 UNIT WT

PICATINNY ARSENAL
ORDNANCE CORPS
DEPT OF THE ARMY
DOVER, NEW JERSEY

DWG SIZE B 8796520

SHEET OF

30, FORM 1177

H	NOR A3K2502 83-07-21	83-07-29	KT/
J	NOR M5K2008 950501	960426	JB

REVISIONS

LTR	DESCRIPTION	DATE	APPROVAL
A	REDRAWN. FORMERLY SHOWN ON DRAWING A8796523.	7-22-67	
B	EO PA 98	12-5-67	
C	EO PA-4059	5-20-60	
D	EO PA-32964	9-21-64	
E	EO PA-5085-4	9-20-67	
F	EOPA52862-4 6-11-68	6-17-68	
G	TDS1561 04/10/75	4-4-75	

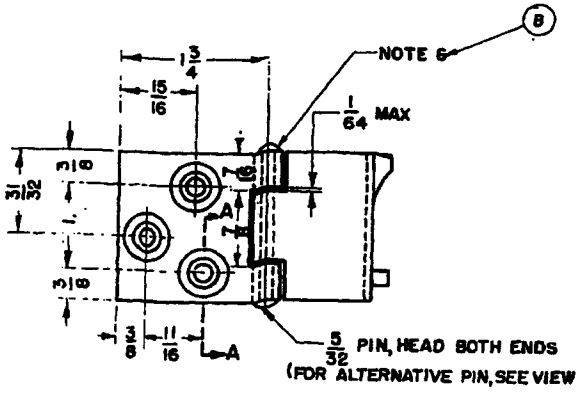

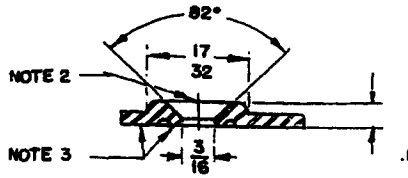

SECTION A-A
SCALE, 2/1

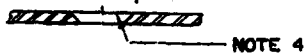

SECTION A-A ALTERNATIVE
SCALE, 2/1

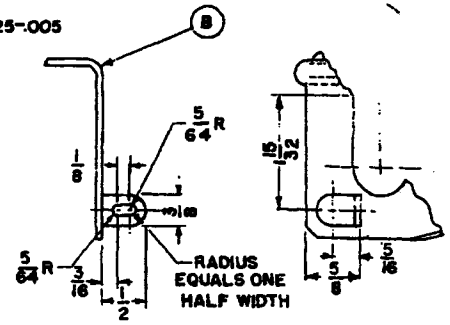

VIEW A
HASP, ALTERNATIVE

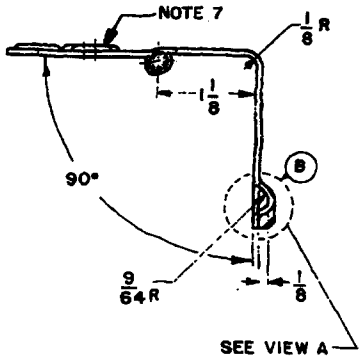

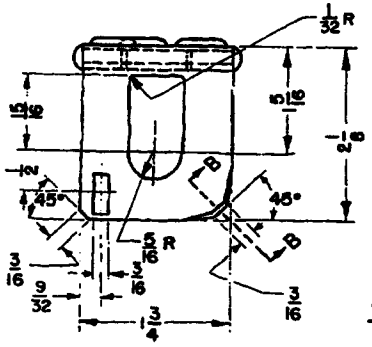

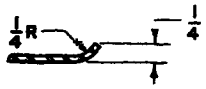

SECTION B-B

CURRENT DESIGN ACTIVE CAGE CODE 19200
U.S. ARMY
ARMAMENT RESEARCH, DEVELOPMENT AND ENGINEERING CENTER
PICATINNY ARSENAL, NEW JERSEY 07806-5000

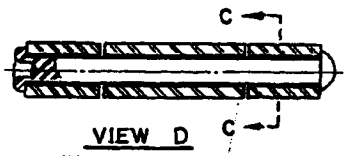

VIEW D
PIN, ALTERNATIVE
SCALE, 2/1

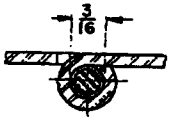

SECTION C-C

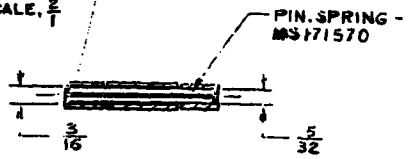

VIEW E
PIN, ALTERNATIVE

NOTES:

1 - SPEC MIL-A-2550 APPLIES.
2 - FORM HOLES SO THAT TOP OF NO.7 F.H WOOD SCREW WILL BE FLUSH OR BELOW TOP SURFACE.
3 - EMBOSSING MUST NOT PROTRUDE BELOW THIS SURFACE.
4 - COUNTERSINK FOR NO.7 FLATHEAD WOOD SCREW. (SCREW HEAD MUST BE FLUSH OR BELOW TOP SURFACE)
5 - PROTECTIVE FINISH:- FINISH NO. 1.1.2.3 OR NO.1.9.2.3 OF MIL-STD-171.
6 - ALTERNATIVE METHOD OF CONSTRUCTION, HASP KNUCKLES SHOWN MAY BE INTERCHANGED TO OPPOSITE LEAF OF ASSEMBLY.
7 - MATERIAL:- WIRE STEEL, 1010-1020 SPECIFICATION ASTM-A510 OR ASTM-A853, STRIP STEEL, 1010-1020, HOT ROLLED, PICKLED AND OILED, COMMERCIAL QUALITY NO.15 GAGE (.072±.006) OR COLD ROLLED NO.16 GAGE (.065±.003) ASTM-A569 OR ASTM-A109.

PART NO. 8796523

DISTRIBUTION STATEMENT A.
APPROVED FOR PUBLIC RELEASE;
DISTRIBUTION IS UNLIMITED.

SEE ENGINEERING RECORDS		PHYSICAL PROPERTIES	UNLESS OTHERWISE SPECIFIED DIMENSIONS ARE IN INCHES TOLERANCES ON FRACTIONS ± 1/64 DECIMALS ± ANGLES	ORIGINAL DATE OF DRAWING OCT 12, 1966	HASP
NEXT ASSY	USED ON	TP	MATERIAL SEE NOTE 7	DRAFTSMAN A.B.	PICATINNY ARSENAL ORDNANCE CORPS DEPT OF THE ARMY DOVER, NEW JERSEY
APPLICATION		TS	HEAT TREATMENT	TRACED A.B.	CODE IDENT 19203
DO NOT USE	APPLY PART NO.	EL2	FINAL PROTECTIVE FINISH SEE NOTE 5	SUBMITTED	SCALE 1/1
		RA		APPROVED	UNIT WT
		BH			C 8796523
		RH			SHEET

NOTICE: When Government drawings, specifications, or other data are used for any purpose other than in connection with a definitely related Government procurement operation, the United States Government thereby incurs no responsibility nor any obligation whatsoever; and the fact that the Government may have formulated, furnished, or in any way supplied the said drawings, specifications, or other data is not to be regarded by implication or otherwise as in any manner licensing the holder of any patent or patent application, or conveying any rights or permission to manufacture, use or sell any patented invention that may in any way be related thereto.

8796524_19203__J_0001_0001_U_N
February 25, 2004 7:52 AM

00 Form No. 1177

REVISIONS			
SYM	DESCRIPTION	DATE	APPROVAL
A	REDRAWN. FORMERLY SHOWN ON DRAWING A8796524.	7-22-57	
B	EO PA 911	12-5-57	
C	EO PA-4059	5-26-60	
D	EO PA-32984	9-21-64	
E	EO PA-50815-4/11-1-67	11-20-67	
F	EOPA52862-4/6-11-68	6-17-68	
G	NOR A3K2502 83-07-21	83 07 29	
H	NOR M7J3011/670630	690303	
J	NOR M5K2008 950501	960426	JB

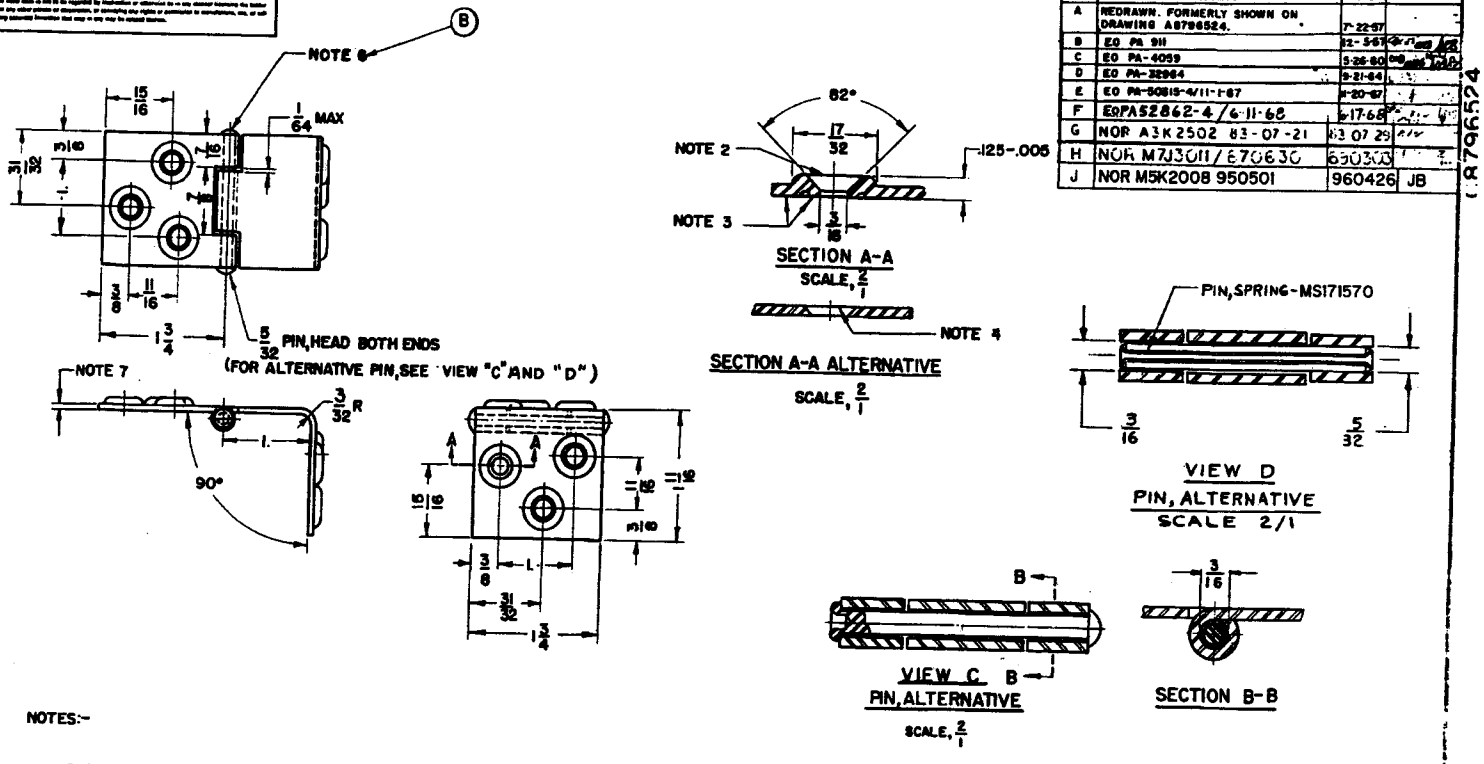

NOTES:-

1-SPEC MIL-A-2550 APPLIES.
2-FORM HOLES SO THAT TOP OF NO.7 F.H. WOOD SCREW WILL BE FLUSH OR BELOW TOP SURFACE.
3-EMBOSSING MUST NOT PROTRUDE BELOW THIS SURFACE.
4-COUNTERSINK FOR NO.7 FLATHEAD WOOD SCREW. (SCREW HEAD MUST BE FLUSH OR BELOW TOP SURFACE.)
5-PROTECTIVE FINISH:- FINISH NO. 1.1.2.3 OR 1.9.2.3 OF MIL-STD-171.
6-ALTERNATIVE METHOD OF CONSTRUCTION, HINGE KNUCKLES SHOWN MAY BE INTERCHANGED TO OPPOSITE LEAF ASSEMBLY.
7-MATERIAL:- WIRE STEEL, 1010-1020 SPECIFICATION ASTM-A510 OR ASTM-A853, STRIP, STEEL, 1010- 1020, HOT ROLLED, PICKLED AND OILED, COMMERCIAL QUALITY, NO.15 GAGE (.072±.006) OR COLD ROLLED NO.16 GAGE (.065±.003) ASTM-A415 OR ASTM-A109.

CURRENT DESIGN ACTIVITY CAGE CODE 19200
U.S. ARMY
ARMAMENT RESEARCH, DEVELOPMENT AND ENGINEERING CENTER
PICATINNY ARSENAL, NEW JERSEY 07806-5000

PART NO. 8796524

DISTRIBUTION STATEMENT A.
APPROVED FOR PUBLIC RELEASE;
DISTRIBUTION IS UNLIMITED

SEE ENGINEERING RECORDS	PHYSICAL PROPERTIES	UNLESS OTHERWISE SPECIFIED DIMENSIONS ARE IN INCHES TOLERANCES ON FRACTIONS ± 1/64 DECIMALS ANGLES	ORIGINAL DATE OF DRAWING OCT 12 1956
APPLICATION	MATERIAL SEE NOTE 7	HEAT TREATMENT	SUBMITTED GR Buck GRD ENGR.
DO NOT APPLY PART NO.	FINAL PROTECTIVE FINISH SEE NOTE 5		APPROVED BY ORDER OF THE CHIEF OF ORDNANCE

HINGE

PICATINNY ARSENAL
ORDNANCE CORPS
DEPT OF THE ARMY
DOVER, NEW JERSEY

CODE IDENT NO 19203

SCALE 1/1 | UNIT WT | C | 8796524 | SHEET OF