REVISION			
LTR	DESCRIPTION	DATE	APPROVED
-	PRODUCT BASELINE		

ES:

NAIL THROUGH SOFTWOOD AND PLYWOOD OF FRONT AND BACK SIDE ASSEMBLY AND INTO SOFTWOOD OF END ASSEMBLY AS INDICATED USING 6d NAILS (20 REQUIRED).

NAIL THROUGH FRONT AND BACK SIDE ASSEMBLY INTO BOTTOM ASSEMBLY AS INDICATED USING 6d NAILS (10 REQUIRED).

NAIL THROUGH END ASSEMBLY INTO BOTTOM ASSEMBLY AS INDICATED USING 6d NAILS (8 REQUIRED).

NAIL THROUGH PLYWOOD OF FRONT AND BACK SIDE ASSEMBLY INTO ACV00560-2 AS INDICATED USING 6d NAILS (4 REQUIRED).

SECURE SWIVEL ASSEMBLY TO FRONT SIDE ASSEMBLY WITH TWO 3/4" NO. 7 SCREWS TO ALLOW CONNECTION OF SWIVEL ASSEMBLY AND HASP.

SECURE HINGES TO BACK SIDE ASSEMBLY USING 3/4" NO. 7 SCREWS (6 REQUIRED).

PARTS LIST

QTY REQ	PART NUMBER	NOMENCLATURE
4	ACV00560-2	INNER CRADLE
2	ACV00560-3	BASE PIECE
1	ACV00591-1	PLYWOOD
1	ACV00591-2	PLYWOOD
2	ACV00591-3	PLYWOOD
2	ACV00591-4	PLYWOOD
1	ACV00591-5	PLYWOOD
4	ACV00592-1	SOFTWOOD
4	ACV00592-2	SOFTWOOD
2	ACV00592-3	SOFTWOOD
3	ACV00592-4	SOFTWOOD
1	ACV00592-5	SOFTWOOD
1	ACV00592-6	SOFTWOOD
2	ACV00592-7	SOFTWOOD
2	ACV00592-8	SOFTWOOD
1	8798523	HASP
2	8798524	HINGE
1	8798520	SWIVEL ASSEMBLY
4	CCH-5305	HANDLE

75	18 GAUGE 1"	STAPLES
56	6d	NAILS
4	4d	NAILS
17	NO. 7	SCREWS
20	10-24	SCREWS
20	10-24	TEE NUTS

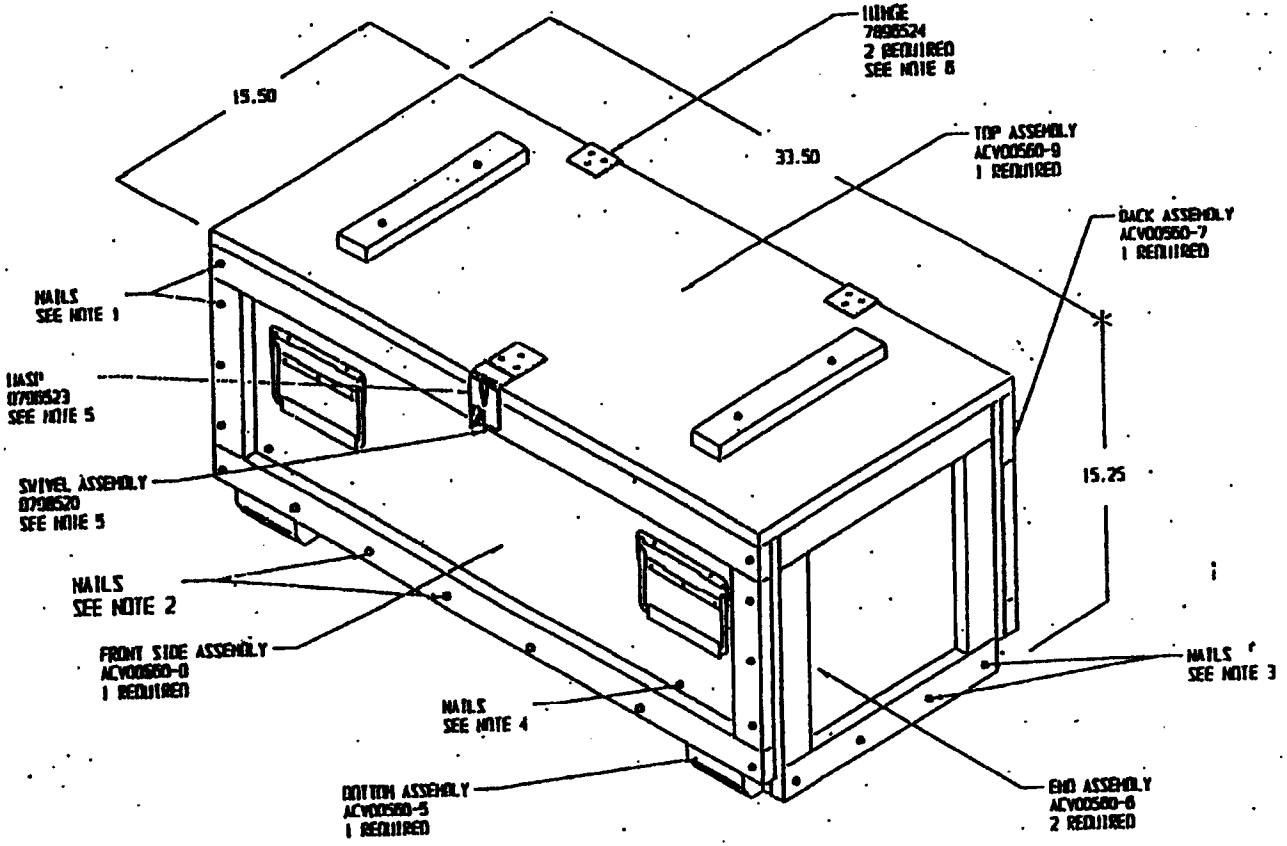

PART NO ACV00560

DISTRIBUTION STATEMENT A.

APPROVED FOR PUBLIC RELEASE; DISTRIBUTION IS UNLIMITED.

NEXT ASSY	USED ON		
APPLICATION			

97-05-20

JFS | JSURDYK

DESIGN ACTIVITY

SHIPPING CONTAINER FOR 7" X 27" HRC

SIZE B | CAGE CODE 28820 | ACV00560

SCALE | UNIT WT | SHEET 1 OF 10

REVISION			
LTR	DESCRIPTION	DATE	APPROVED
-	PRODUCT BASELINE		

ES:

LUMBER: FED SPEC MM-L-751: DOUGLAS FIR OR COMPARABLE LUMBER WITH STRAIGHT GRAIN AND FREE FROM MATERIAL DEFECTS.

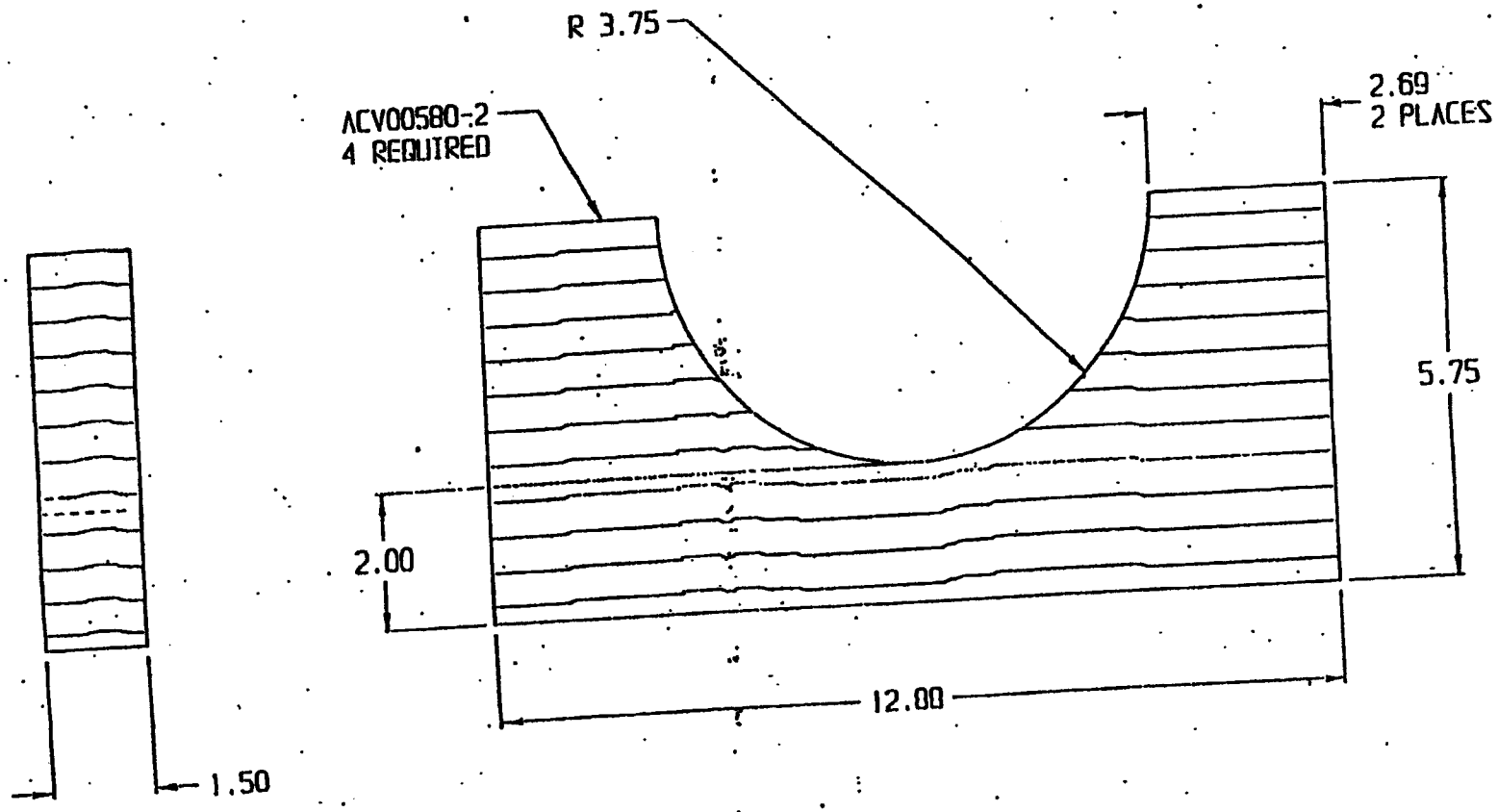

PART NO ACV00560-2

DISTRIBUTION STATEMENT A.

APPROVED FOR PUBLIC RELEASE; DISTRIBUTION IS UNLIMITED.

NEXT ASSY	USED ON	APPLICATION	
DATE 97-05-29	JFS	JSUROYK	DESIGN ACTIVITY
INNER CRADLE OF SHIPPING CONTAINER FOR 7" X 27" HRC			
SIZE B	CAGE CODE 28820	ACV00560	
SCALE	UNIT WT	SHEET 2 OF 1	

DISTRIBUTION IS UNLIMITED.

APPLICATION

REVISION			
LTR	DESCRIPTION	DATE	APPROVED
-	PRODUCT BASELINE		

ER: FED SPEC MM-L-751; DOUGLAS FIR OR
ARABLE LUMBER WITH STRAIGHT GRAIN AND
FROM MATERIAL DEFECTS.

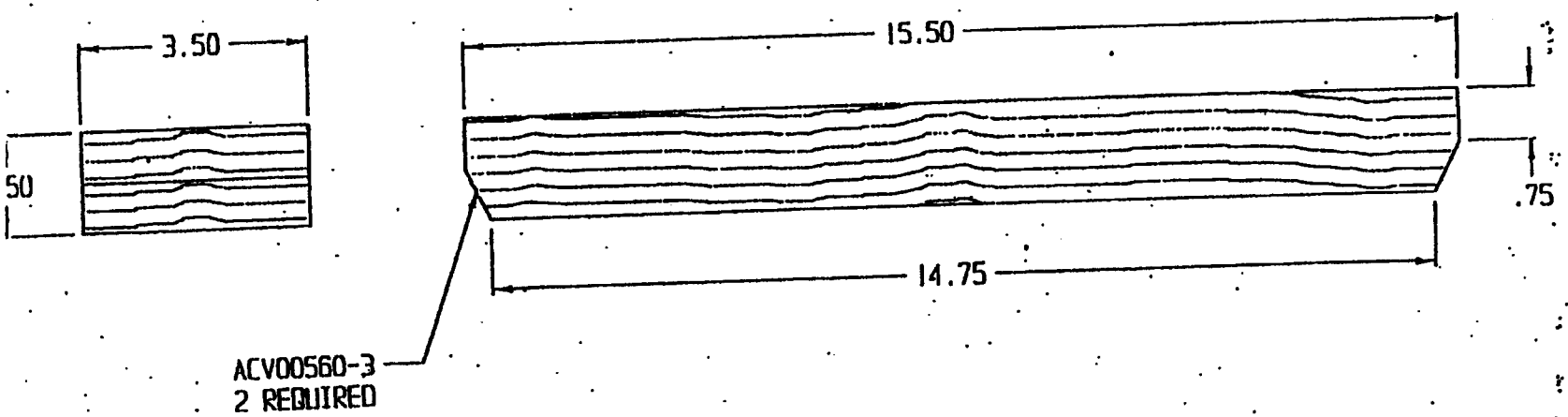

PART NO ACV00560-3

DISTRIBUTION STATEMENT A.

APPROVED FOR PUBLIC RELEASE;
DISTRIBUTION IS UNLIMITED.

NEXT ASSY	USED ON		
APPLICATION			

DATE 97-04-17

JFS | JSHROYK

DESIGN ACTIVITY

BASE PIECE OF SHIPPING CONTAINER FOR 7" X 27" MRC

SIZE D | CAGE CODE 28620 | ACV00560

SCALE | UNIT WT | SHEET 3 OF 10

REVISIONS			
	DESCRIPTION	DATE	APPROVED
-	PRODUCT BASELINE		

.IL THROUGH ACV00560-2 INTO ACV00592-5
.ING 6d NAILS (4 REQUIRED).

.ILS: FED SPEC FF-N-105: COMMON.

.ILS MUST BE AT LEAST 1/2" FROM ANY EDGE.

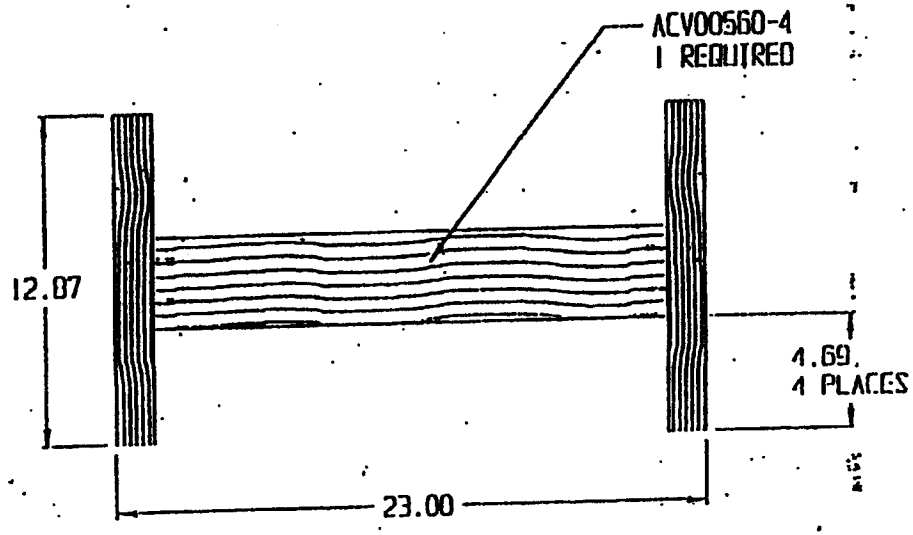

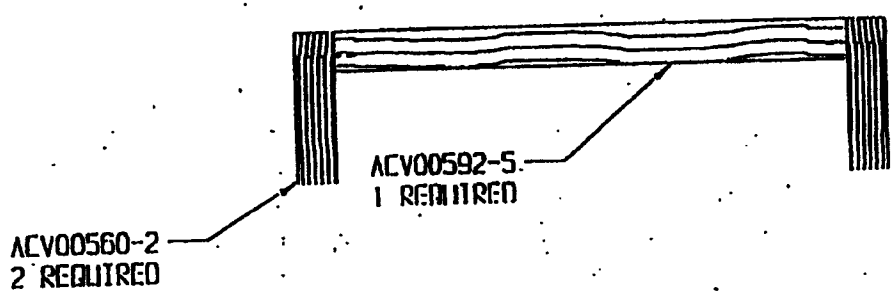

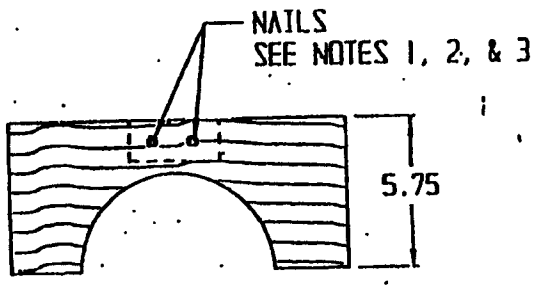

PART NO ACV00560-4

DISTRIBUTION STATEMENT A.

APPROVED FOR PUBLIC RELEASE;
DISTRIBUTION IS UNLIMITED.

07-05-29			
JFS		JSIROVK	
TOP CRADLE ASSEMBLY FOR SHIPPING CONTAINER FOR 7" X 27" HSC			
SIZE D	CAGE CODE 28820	ACV00560	
SCALE	UNIT WT	SHEET 4 OF 10	

REVISIONS			
LTR	DESCRIPTION	DATE	APPROVED
-	PRODUCT BASELINE.		

. THROUGH ACV00591-2 INTO ACV00560-3
NG 6d NAILS (10 REQUIRED).

LS: FED SPEC FF-N-105; COMMON.

LS MUST BE AT LEAST 1/2" FROM ANY EDGE.

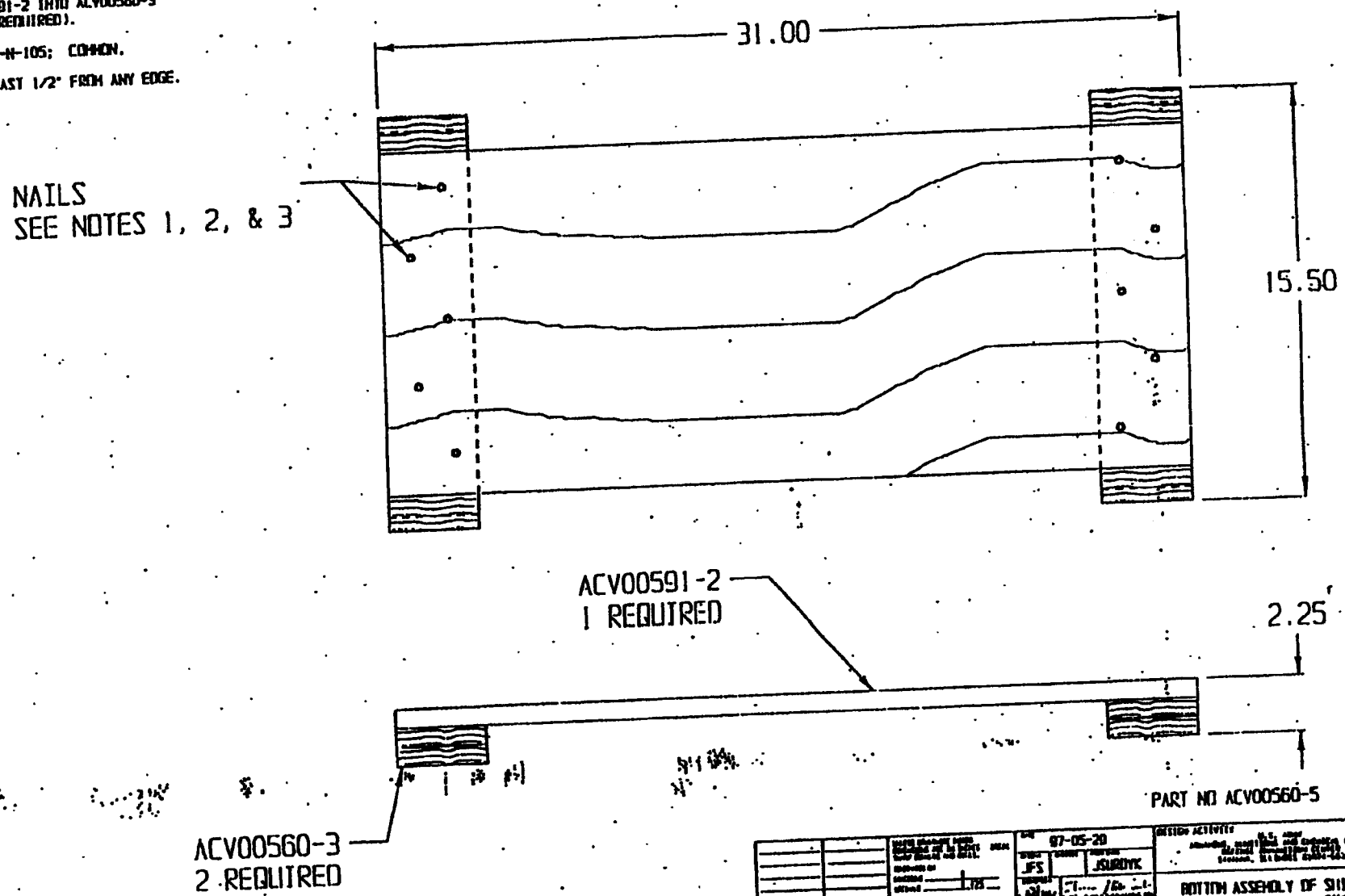

DISTRIBUTION STATEMENT A.

APPROVED FOR PUBLIC RELEASE;
DISTRIBUTION IS UNLIMITED.

NEXT ASSY	NEXT ON	APPLICATION	
97-05-20	JFS	JSURDYK	DESIGN ACTIVITY: U.S. ARMY
BOTTOM ASSEMBLY OF SHIPPING CONTAINER FOR 7" X 27" MRC			
SIZE D	CAGE CODE 28820	ACV00560	
SCALE	SHEET NO	SHEET 5 OF 10	

REVISION			
LTR	DESCRIPTION	DATE	APPROVED
-	PRODUCT BASELINE		

IOR TO STAPLING, GLUE THE SOFTWOOD
ECES TO THE PLYWOOD WITH CARPENTERS
OH GLUE OR ADHESIVE MEETING STANDARD
M-A-1070. FASTEN STAPLES THROUGH THE
YWOOD INTO THE SOFTWOOD USING A
APLE GUN AND 18 GAUGE 1" LONG BY 1/2"
UN STAPLES. USE ONE STAPLE FOR
PROXIMATELY EVERY 4" OF BOARD.

ITH F1667-05. STANDARD SPECIFICATION FOR
RIVEN FASTENERS: NAILS, SPIKES, AND STAPLES.
-H 1050 NAILS, BRADS, STAPLES AND SPIKES;
IRE, CUT AND WROUGHT.

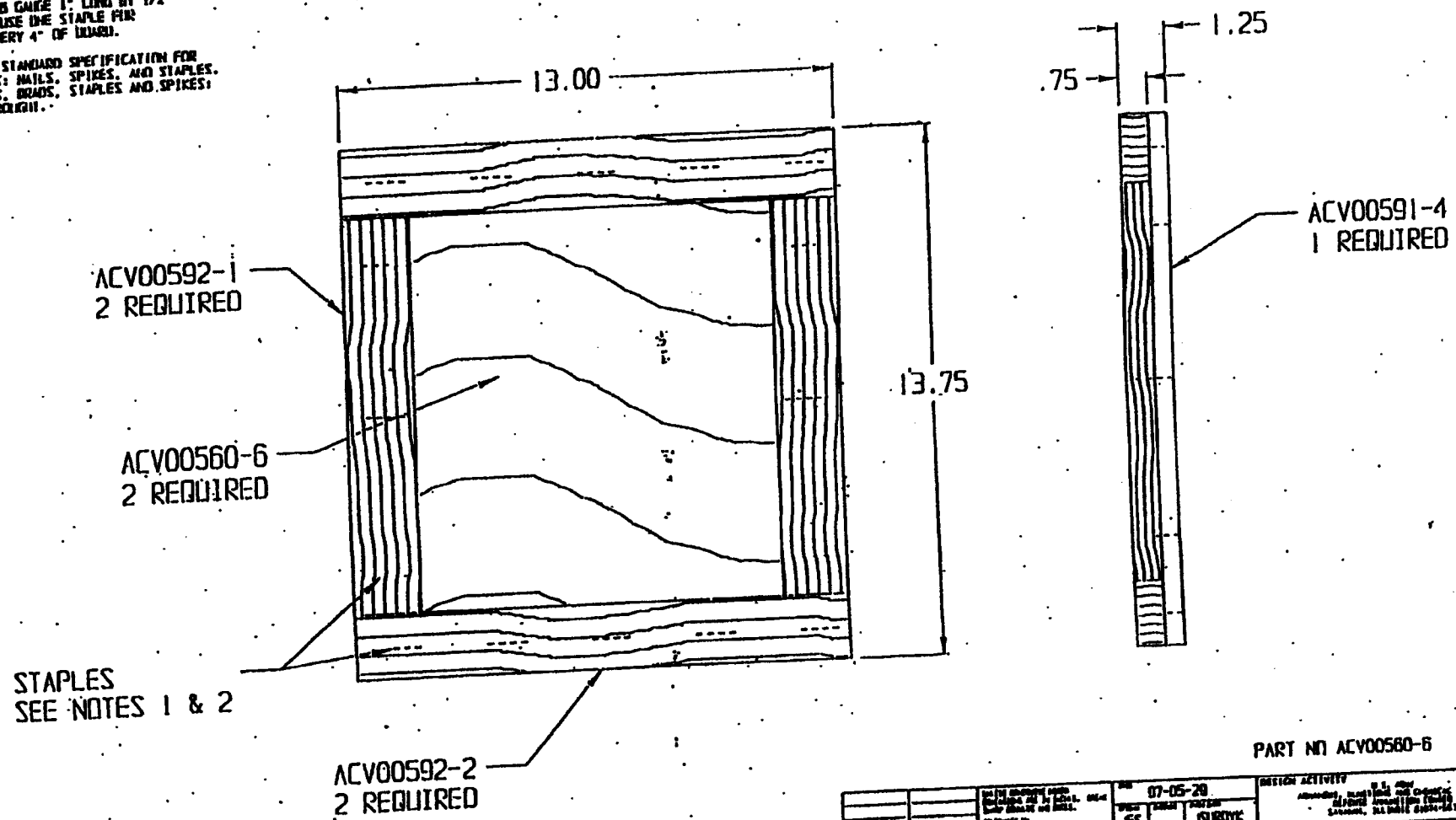

PART NO ACV00560-6

DISTRIBUTION STATEMENT A.

APPROVED FOR PUBLIC RELEASE;
DISTRIBUTION IS UNLIMITED.

NEXT ASSY	USED ON		
APPLICATION			

07-05-29

JFS | JSURDYK

DESIGN ACTIVITY

END ASSEMBLY OF SHIPPING CONTAINER FOR 7" X 27" MRC

SIZE	CAGE CODE	
B	28820	ACV00560

SCALE | SHEET 6 OF 10

REVISION			
LTR	DESCRIPTION	DATE	APPROVED
-	PRODUCT BASELINE		

IOR TO STAPLING, GLUE THE SOFTWOOD
ICES TO THE PLYWOOD WITH CARPENTERS
ID GLUE OR ADHESIVE MEETING
ANDARD MMM-A-1870. FASTEN STAPLES
ROUGH THE PLYWOOD INTO THE SOFTWOOD
ING A STAPLE GUN AND 18 GAUGE 1" LONG BY
2" WIDE STAPLES. USE ONE STAPLE FOR
PROXIMATELY EVERY 4" TO 6" OF BOARD.

TH F1667-05. STANDARD SPECIFICATION FOR
RIVEN FASTENERS: NAILS, SPIKES, AND
TAPLES. FF-N-105B NAILS, BRADS, STAPLES
D SPIKES: WIRE, CUT AND WROUGHT.

URFACE MOUNT HANDLE MODEL NUMBER
CN-5305 FROM AUSTIN HARDWARE, INC. OR
QUIVALENT. DRILL THROUGH ACV00591-3 AND
TTACH USING STAINLESS STEEL 1/2" LONG
0-24 ROUND HEAD PHILLIPS SCREWS AND ZINC
LATED STEEL TEE NUTS (10 EACH REQUIRED).

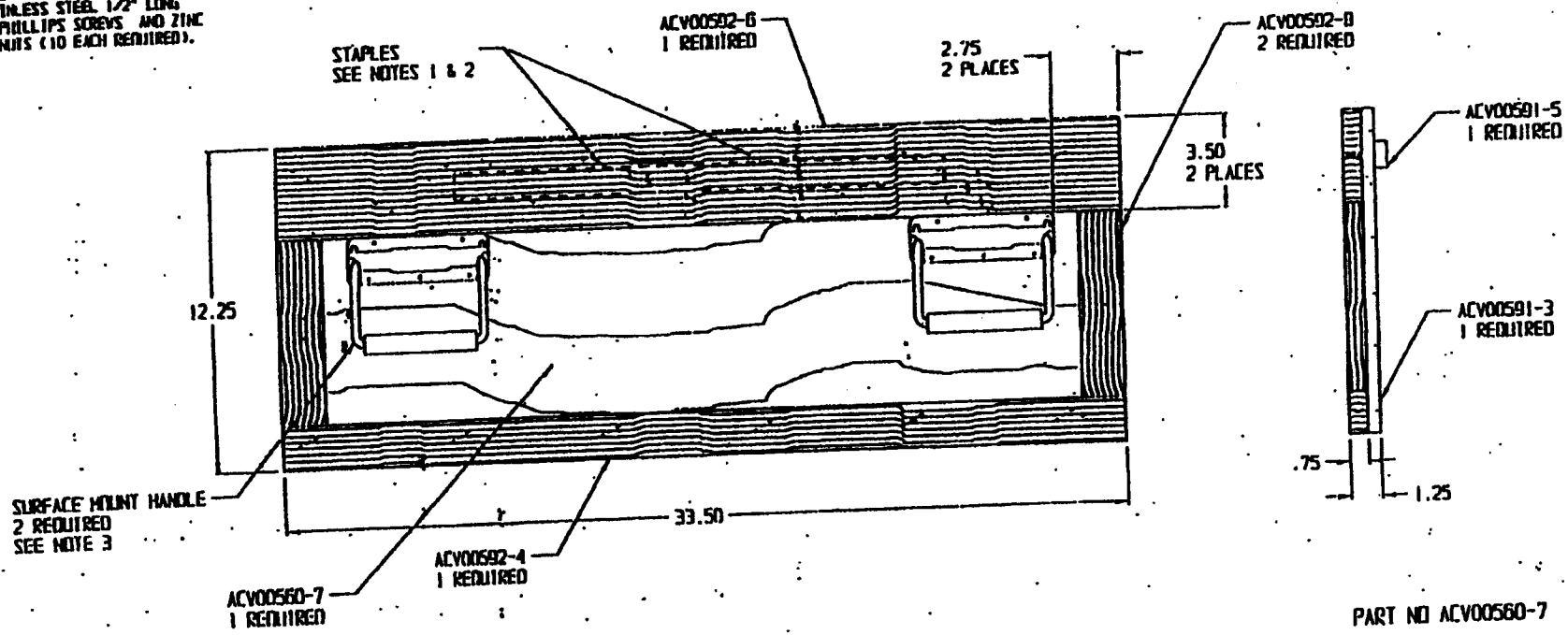

PART NO ACV00560-7

DISTRIBUTION STATEMENT A.

APPROVED FOR PUBLIC RELEASE;
DISTRIBUTION IS UNLIMITED.

97-05-29	JSJ	JSJ/DYK	BACK SIDE ASSEMBLY OF SHIPPING CONTAINER FOR 7" X 27" HRC
SIZE B	CAGE CODE 28820	ACV00560	SHEET 7 OF 10

REVISION			
NO	DESCRIPTION	DATE	APPROVED
-	PRODUCT BASELINE		

ES:

PRIOR TO STAPLING, GLUE THE SOFTWOOD PIECES TO THE PLYWOOD WITH CARPENTERS WOOD GLUE OR ADHESIVE MEETING STANDARD MMM-A-1878. FASTEN STAPLES THROUGH THE PLYWOOD INTO THE SOFTWOOD USING A STAPLE GUN AND 18 GAUGE 1" LONG BY 1/2" WIDE STAPLES. USE ONE STAPLE FOR APPROXIMATELY EVERY 4" TO 6" OF BOARD.

ASTM F1667-95. STANDARD SPECIFICATION FOR DRIVEN FASTENERS: NAILS, SPIKES, AND STAPLES. FF-N-105B NAILS, BRADS, STAPLES AND SPIKES: WIRE, CUT AND WROUGHT.

SURFACE MOUNT HANDLE MODEL NUMBER CCN-5305 FROM AUSTIN HARDWARE, INC. OR EQUIVALENT. DRILL THROUGH ACV00591-3 AND ATTACH TO ACV00592-0 USING STAINLESS STEEL 1/2" 10-24 ROUND HEAD PHILLIPS SCREWS AND ZINC PLATED STEEL TEE NUTS (10 EACH REQUIRED).

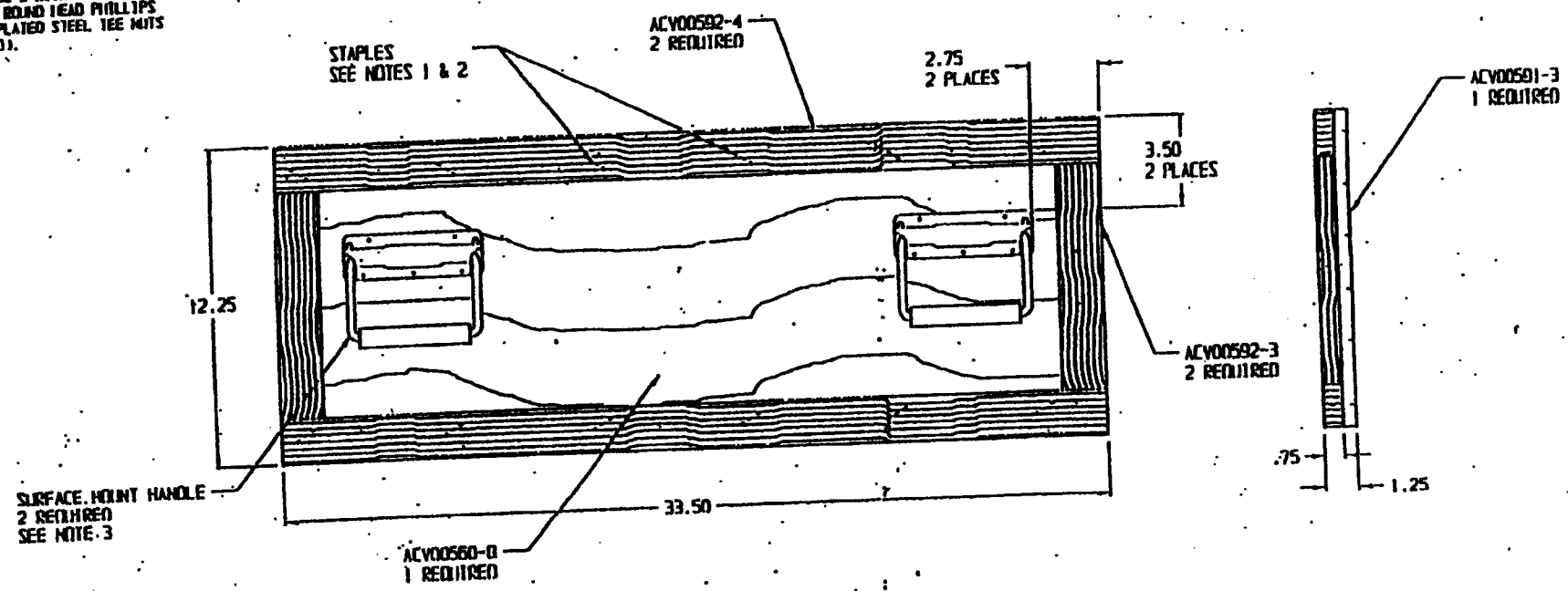

PART NO ACV00560-0

DISTRIBUTION STATEMENT A.

APPROVED FOR PUBLIC RELEASE; DISTRIBUTION IS UNLIMITED.

97-05-29			
JFS		JSURDYK	
FRONT SIDE ASSEMBLY OF SHIPPING CONTAINER FOR 7" X 27" HRC			
SIZE D	CAGE CODE 28820	ACV00560	

DISTRIBUTION IS UNLIMITED.

REVISION			
LTR	DESCRIPTION	DATE	APPROVED
-	PRODUCT BASELINE		

INSTALL ACV00592-7 INTO ACV00591-1
44 NAILS (4 REQUIRED).

; PER SPEC FF-N-105; COMMON.

MUST BE AT LEAST 1/2" FROM ANY EDGE.

S; PER SPEC FF-N-105.

/4" NO. 7 SCREWS FOR EACH HINGE AND HASP
(UIRED).

ADJUSTABLE AS REQUIRED TO ACCOMMODATE
AND HOLDER BUCKLES.

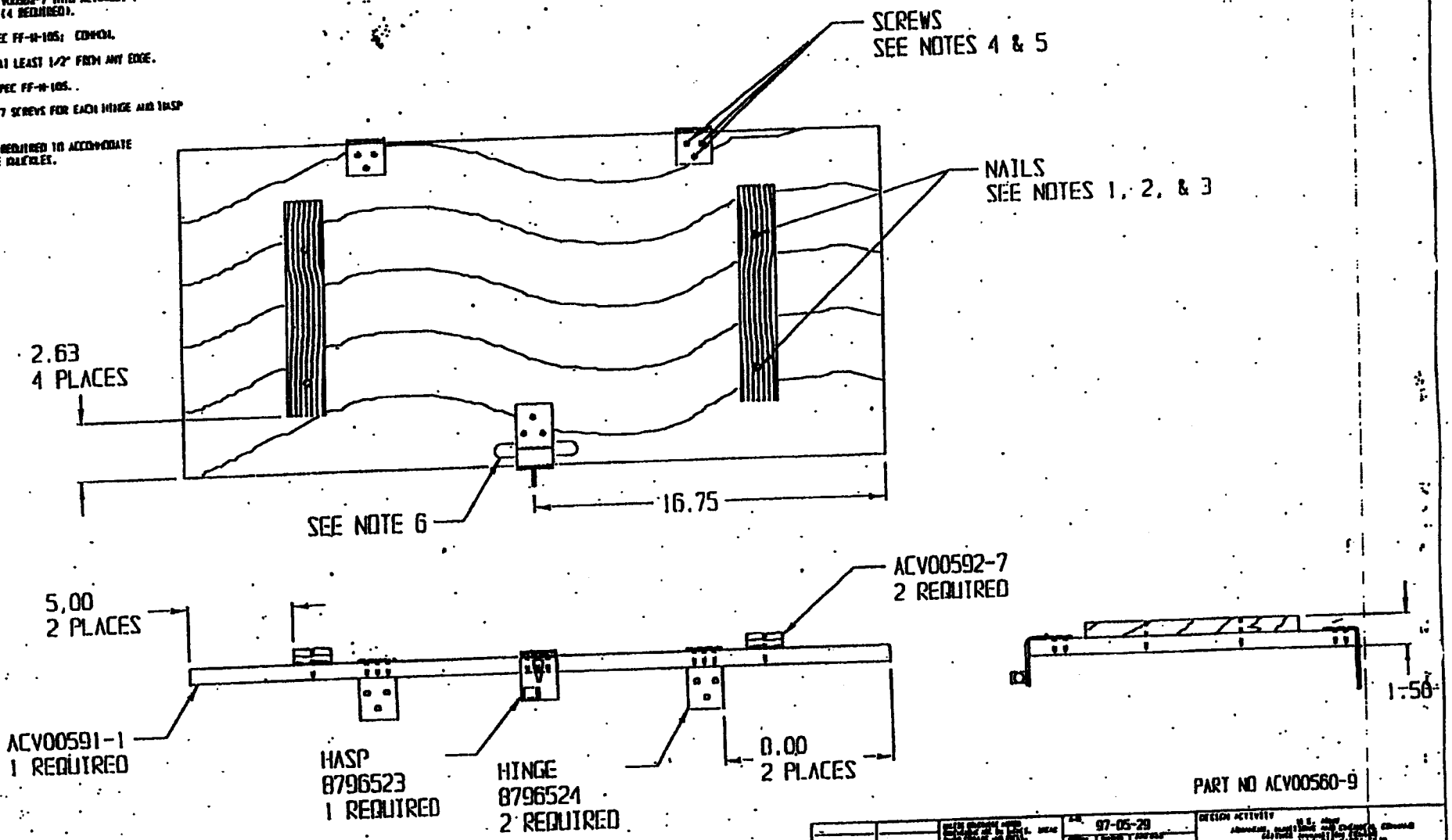

DISTRIBUTION STATEMENT A.

APPROVED FOR PUBLIC RELEASE;
DISTRIBUTION IS UNLIMITED.

APPLICATION

97-05-29

JFS

DESIGN ACTIVITY

TOP ASSEMBLY OF SHIPPING
CONTAINER FOR 7" X 27" HRC

SIZE B | CAGE CODE 28820 | ACV00560

SCALE | SHEET | SHEET 9 OF 10

REVISION			
LTR	DESCRIPTION	DATE	APPROVED
-	PRODUCT BASELINE		

1 ACV00560-4 OVER 7" X 27" HRC
WE CLOSING SHIPPING CONTAINER.

1F ACV00591-5 TO ACV00560-7 TO
HIZE MOVEMENT OF HRC.

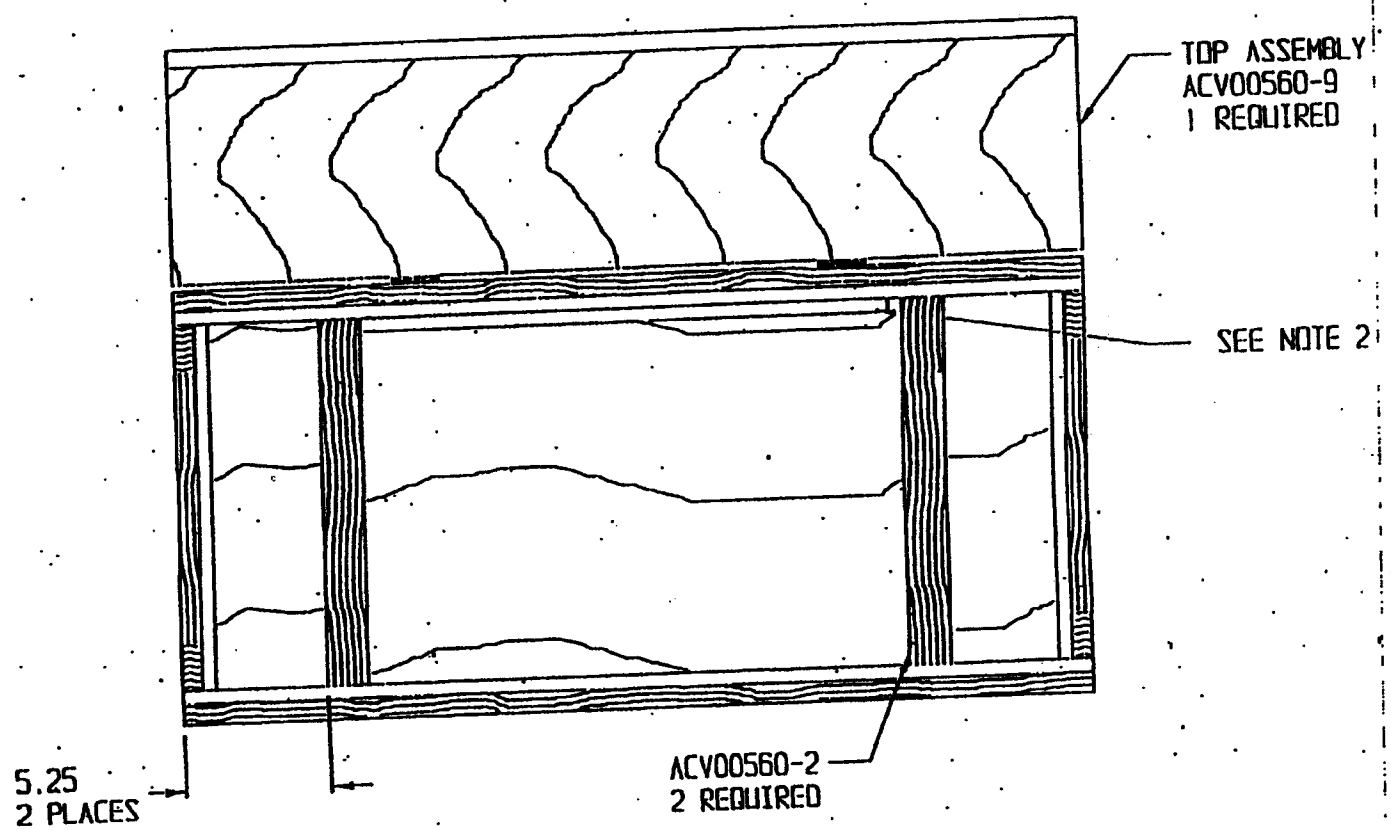

PART NO ACV00560-10

DISTRIBUTION STATEMENT A.

APPROVED FOR PUBLIC RELEASE;
DISTRIBUTION IS UNLIMITED.

NEXT ASSY	USED ON		
APPLICATION			

97-05-20

JFS | JSURDYK

DESIGN ACTIVITY

INSIDE VIEW OF SHIPPING CONTAINER FOR 7" X 27" HRC

SIZE	CAGE CODE	
D	28820	ACV00560

SCALE | SHEET NO | SHEET 10 OF 10

REVISION			
LTR	DESCRIPTION	DATE	APPROVED
-	PRODUCT BASELINE		

S:

LUMBER: FED SPEC MM-L-751: DOUGLAS FIR OR COMPARABLE LUMBER WITH STRAIGHT GRAIN AND FREE FROM MATERIAL DEFECTS.

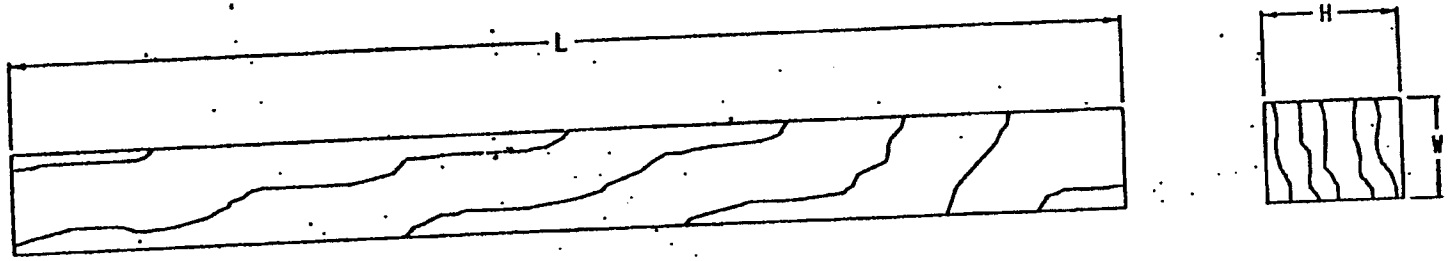

TYPICAL SOFTWOOD PIECE
SEE NOTE 1 AND DIMENSION TABLE

DIMENSION TABLE--DIMENSIONS IN INCHES

NO. NEEDED	PART NUMBER	L		W		H
4	ACV00592-1	10.25	X	.75	X	1.75
4	ACV00592-2	13	X	.75	X	1.75
2	ACV00592-3	11.75	X	.75	X	1.75
3	ACV00592-4	33.50	X	.75	X	1.75
1	ACV00592-5	20	X	1.50	X	3.50
1	ACV00592-6	33.50	X	.75	X	3.50
2	ACV00592-7	10.25	X	.75	X	1.75
2	ACV00592-8	7	X	.75	X	1.75

DISTRIBUTION STATEMENT A.

APPROVED FOR PUBLIC RELEASE; DISTRIBUTION IS UNLIMITED.

PART NO ACV00592

97-05-29

JFS

J SUROYK

SOFTWOOD PIECES OF SHIPPING CONTAINER FOR 7" X 27" HRC

SIZE B | CAGE CODE 28820 | ACV00592

SCALE | UNIT WT | SHEET 1 OF 1

REVISION			
LTR	DESCRIPTION	DATE	APPROVED
-	PRODUCT BASELINE		

PLYWOOD: VOLUNTARY PRODUCT STANDARD PS 1-03 FOR CONSTRUCTION AND INDUSTRIAL PLYWOOD, GRADE A-C.

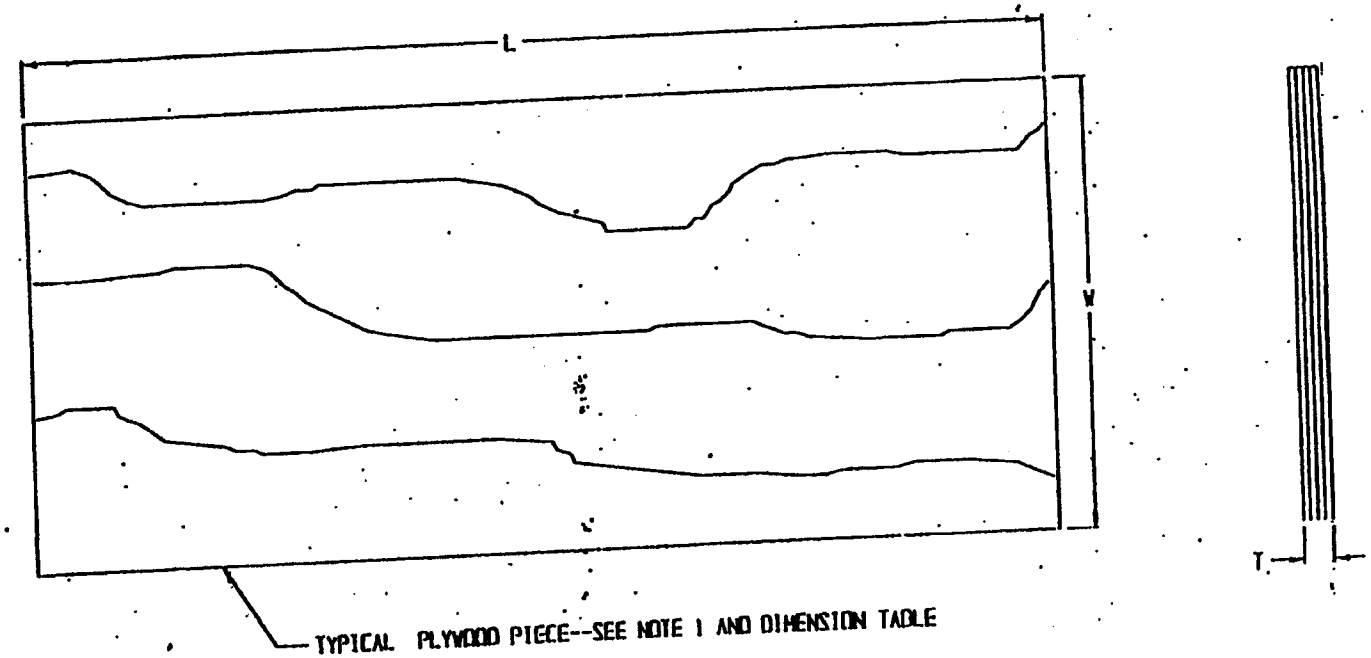

DIMENSION TABLE--DIMENSIONS IN INCHES

NO. REQUIRED	L	W	T	PART NUMBER
1	33.50 X	15.50 X	.75	ACV00591-1
1	31 X	13 X	.75	ACV00591-2
2	33.50 X	12.25 X	.50	ACV00591-3
2	13.75 X	13 X	.50	ACV00591-4
1	19.75 X	1 X	.50	ACV00591-5

DISTRIBUTION STATEMENT A.

APPROVED FOR PUBLIC RELEASE; DISTRIBUTION IS UNLIMITED.

PART NO ACV00591

07-05-20

JFS | J SHROYK

PLYWOOD PIECES OF SHIPPING CONTAINER FOR 7" X 27" MRC

SIZE B | CAGE CODE 28820 | ACV00591

SCALE | SHEET 1 OF 1

Attachment

Drawing Number and Title	Pages	Date
8796524 Hinge	1	NA
8796523 Hasp	1	NA
8796520 Swivel Assembly	1	NA

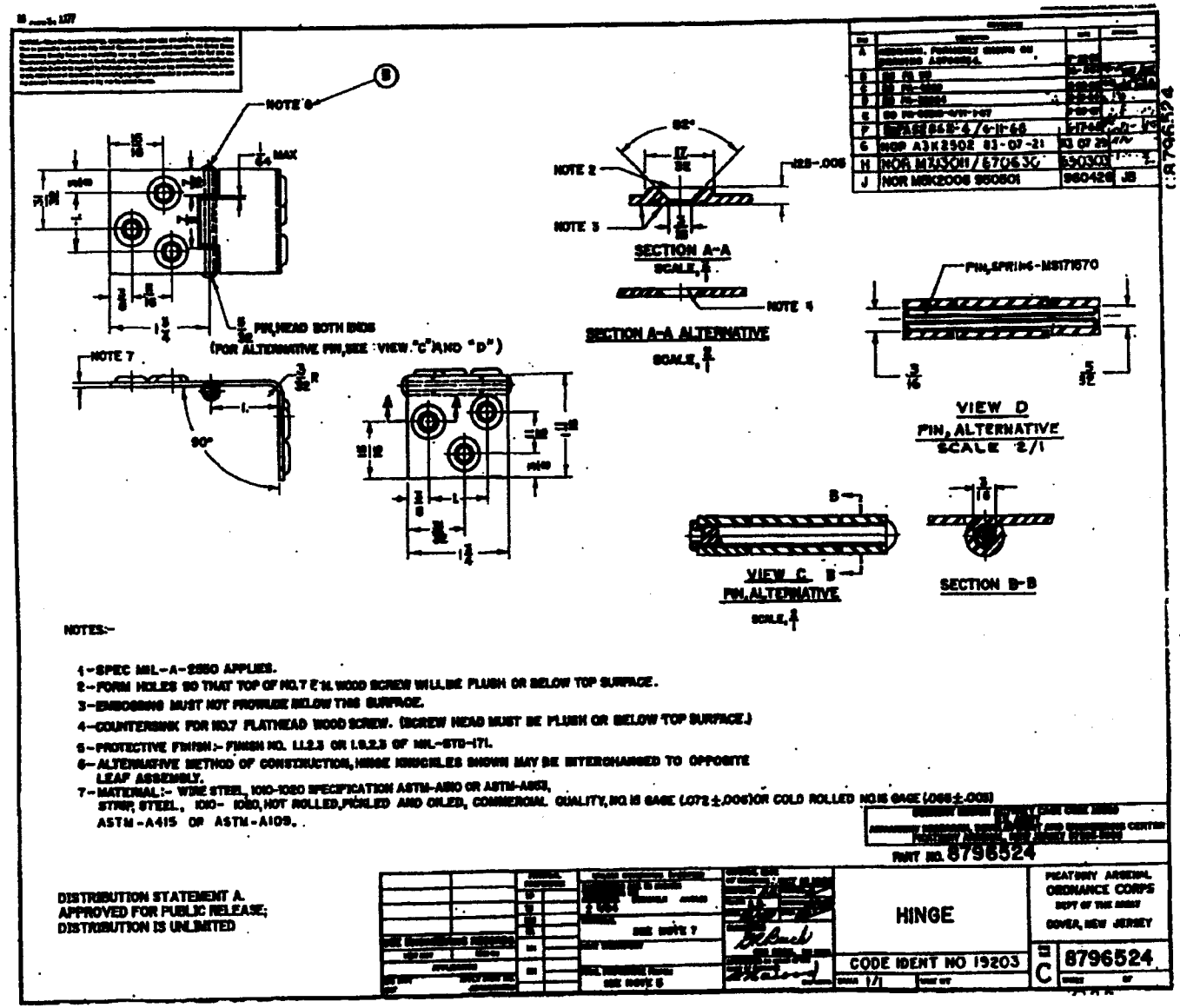

NOTES:-

1-SPEC MIL-A-2550 APPLIES.
2-FORM HOLES SO THAT TOP OF NO.7 2" N. WOOD SCREW WILL BE FLUSH OR BELOW TOP SURFACE.
3-EMBOSSING MUST NOT PROTRUDE BELOW THIS SURFACE.
4-COUNTERSINK FOR NO.7 FLATHEAD WOOD SCREW. (SCREW HEAD MUST BE FLUSH OR BELOW TOP SURFACE.)
5-PROTECTIVE FINISH:- FINISH NO. 1.1.2.3 OR 1.9.2.3 OF MIL-STD-171.
6-ALTERNATIVE METHOD OF CONSTRUCTION, HINGE KNUCKLES SHOWN MAY BE INTERCHANGED TO OPPOSITE LEAF ASSEMBLY.
7-MATERIAL:- WIRE STEEL, 1010-1020 SPECIFICATION ASTM-A510 OR ASTM-A853, STRIP STEEL, 1010-1020, HOT ROLLED, PICKLED AND OILED, COMMERCIAL QUALITY, NO.18 GAGE (.072±.006) OR COLD ROLLED NO.18 GAGE (.066±.003) ASTM-A415 OR ASTM-A109.

REV	DESCRIPTION	DATE	APPROVED
A	[illegible]	[illegible]	
B	[illegible]	[illegible]	
C	[illegible]	[illegible]	
D	[illegible]	[illegible]	
E	[illegible]	[illegible]	
F	[illegible] 6-11-68	[illegible]	
G	NOR A3K2502 83-07-21	83 07 29	
H	NOR MIJSOH/670630	930303	
J	NOR MSK2006 950801	960420	JB

PART NO. 8796524

DISTRIBUTION STATEMENT A.
APPROVED FOR PUBLIC RELEASE;
DISTRIBUTION IS UNLIMITED

HINGE

CODE IDENT NO 19203

SCALE 1/1

PICATINNY ARSENAL
ORDNANCE CORPS
DEPT OF THE ARMY
DOVER, NEW JERSEY

SIZE C

8796524

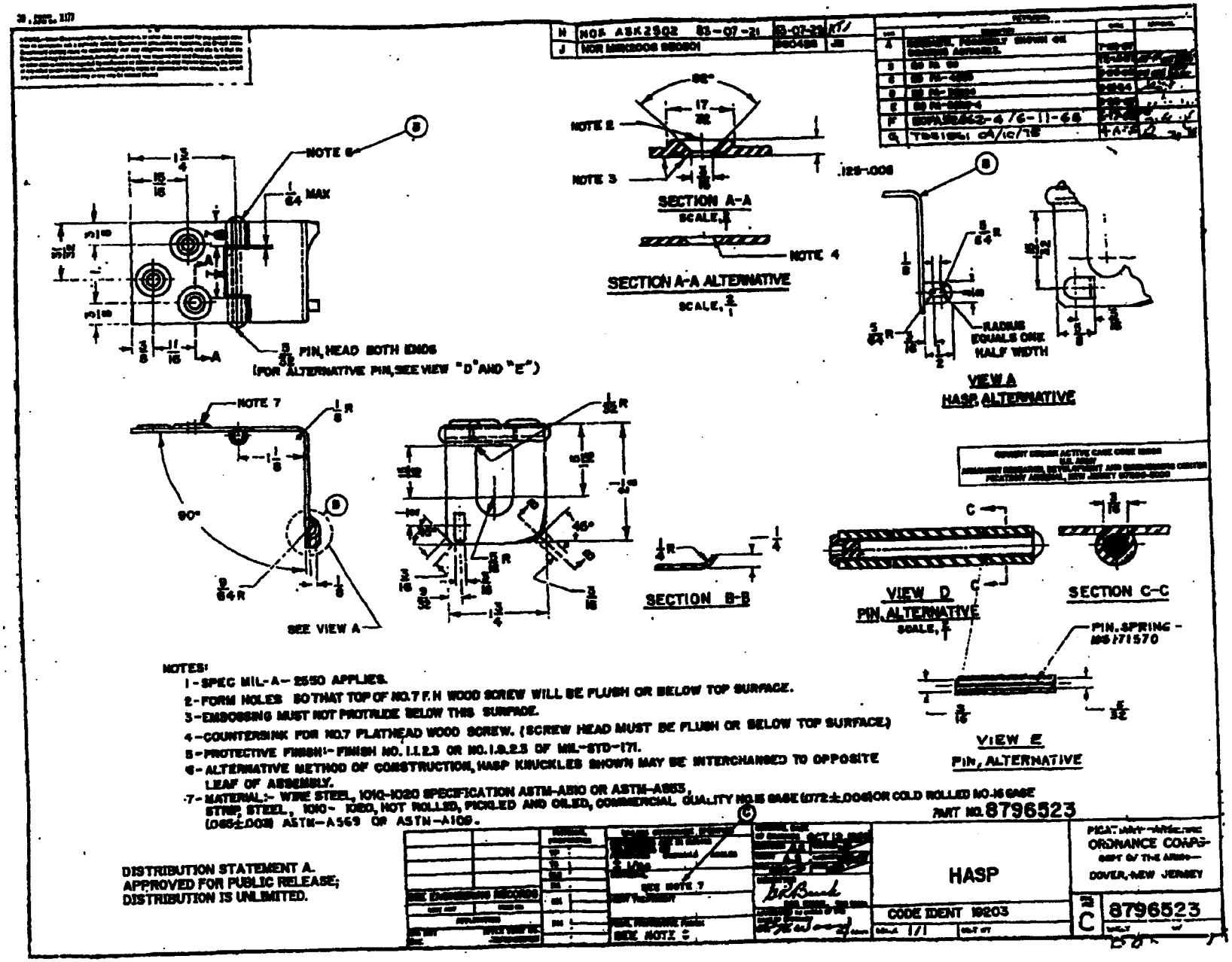

NOTES:

1 - SPEC MIL-A-2550 APPLIES.
2 - FORM HOLES SO THAT TOP OF NO.7 F.H WOOD SCREW WILL BE FLUSH OR BELOW TOP SURFACE.
3 - EMBOSSING MUST NOT PROTRUDE BELOW THIS SURFACE.
4 - COUNTERSINK FOR NO.7 FLATHEAD WOOD SCREW. (SCREW HEAD MUST BE FLUSH OR BELOW TOP SURFACE)
5 - PROTECTIVE FINISH:- FINISH NO. 1.1.2.3 OR NO. 1.9.2.3 OF MIL-STD-171.
6 - ALTERNATIVE METHOD OF CONSTRUCTION, HASP KNUCKLES SHOWN MAY BE INTERCHANGED TO OPPOSITE LEAF OF ASSEMBLY.
7 - MATERIAL:- WIRE STEEL, 1010-1020 SPECIFICATION ASTM-A510 OR ASTM-A853, (.072±.006) OR COLD ROLLED NO.16 GAGE STRIP STEEL, 1010- 1020, HOT ROLLED, PICKLED AND OILED, COMMERCIAL QUALITY NO.16 GAGE (.065±.006) ASTM-A569 OR ASTM-A109.

PART NO. 8796523

DISTRIBUTION STATEMENT A.
APPROVED FOR PUBLIC RELEASE;
DISTRIBUTION IS UNLIMITED.

N	NOR ABK2902	83-07-21	83-07-21 RTJ
J	NOR MRCDOOS 880801	880488	JB

4	GENERAL, PARTIALLY SHOWN ON DRAWING ABOVE.		
5	88 RL 89		
6	88 RL-4888		
8	88 RL-[illegible]		
E	89 RL-[illegible]-4		
F	SUPAUS443-4 76-11-68		
G	TS61[illegible] 04/10/78		

HASP

CODE IDENT 19203

PICATINNY ARSENAL
ORDNANCE CORPS
DEPT OF THE ARMY
DOVER, NEW JERSEY

C 8796523

8796520_19203_-_E_0001_0001_U_N
February 24, 2004 7:56 AM

REVISIONS			
REV	DESCRIPTION	DATE	APPROVAL
A	REDRAWN, FORMERLY SHOWN ON DRAWING A8723680		
B	EO PA 4[illegible]		
C	EO PA-[illegible]		
D	EOPA 4[illegible]-4/1-66-67		
E	EOPA 5[illegible]-4/11-1-67		

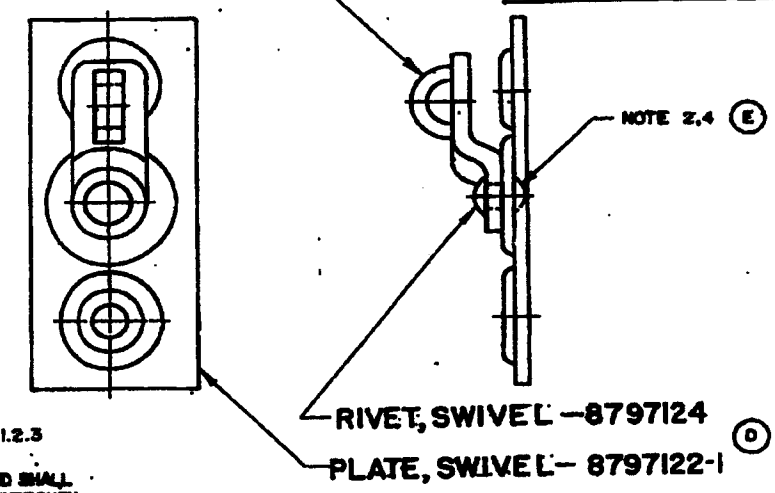

NOTES:-
(C) 1-SPEC MIL-A-2550 APPLIES.
(B) 2-PEEN OR STAKE TO PROVIDE A RESISTANCE TO WITHDRAWAL OF 150 LBS MIN. SWIVEL MUST MOVE FREELY AFTER ASSEMBLY.
3-PROTECTIVE FINISH:-FINISH NO.1.1.2.3 OR 1.9.2.3 OF MIL-STD-171.
(E) 4-WHEN HOLLOW END RIVET IS USED, END SHALL BE ROLLED OUTWARD WITH SMOOTH UNBROKEN FINISH AND SHALL MEET OTHER REQUIREMENTS OF NOTE 2.

FOR ASSOCIATED LIST SEE 8796520 (D)

ORDNANCE PART NO. 8796520

PACKING BOX			
SEE ENGINEERING RECORDS			
APPLICATION			
NEXT ASSY	APPLY NEXT ASSY		

MATERIAL PROPERTIES			

MATERIAL
HEAT TREATMENT
FINAL PROTECTIVE FINISH
SEE NOTE 3

GENERAL DATE OF DRAWING OCT 12 1966

SWIVEL ASSEMBLY

SCALE 2/1 | UNIT WT

PICATINNY ARSENAL
ORDNANCE CORPS
DEPT OF THE ARMY
DOVER, NEW JERSEY

SIZE B | 8796520