Monday, March 01, 2004 09:26:10

NOTES:

1. THIS DRAWING SHALL BE INTERPRETED IN ACCORDANCE WITH APPLICABLE STANDARDS LISTED IN DOD-STD-100. ASME Y14.5 DATED 1994 APPLIES.
2. SURFACE FINISH ON RECESSED AREA OF COVER BOTTOM SIDE 32 MICROINCHES MAXIMUM IN O-RING CONTACT AREA (INSIDE BOLT CIRCLE DIAMETER). ELSEWHERE 125 MICROINCHES MAXIMUM.
3. MATERIAL: STAINLESS STEEL PLATE, 304, PER ASTM A240 HOT ROLLED, ANNEALED AND PICKLED.

DRAFT

REVISION			
LTR	DESCRIPTION	DATE	APPROVED
-	PRODUCT BASELINE	04-XX-XX	

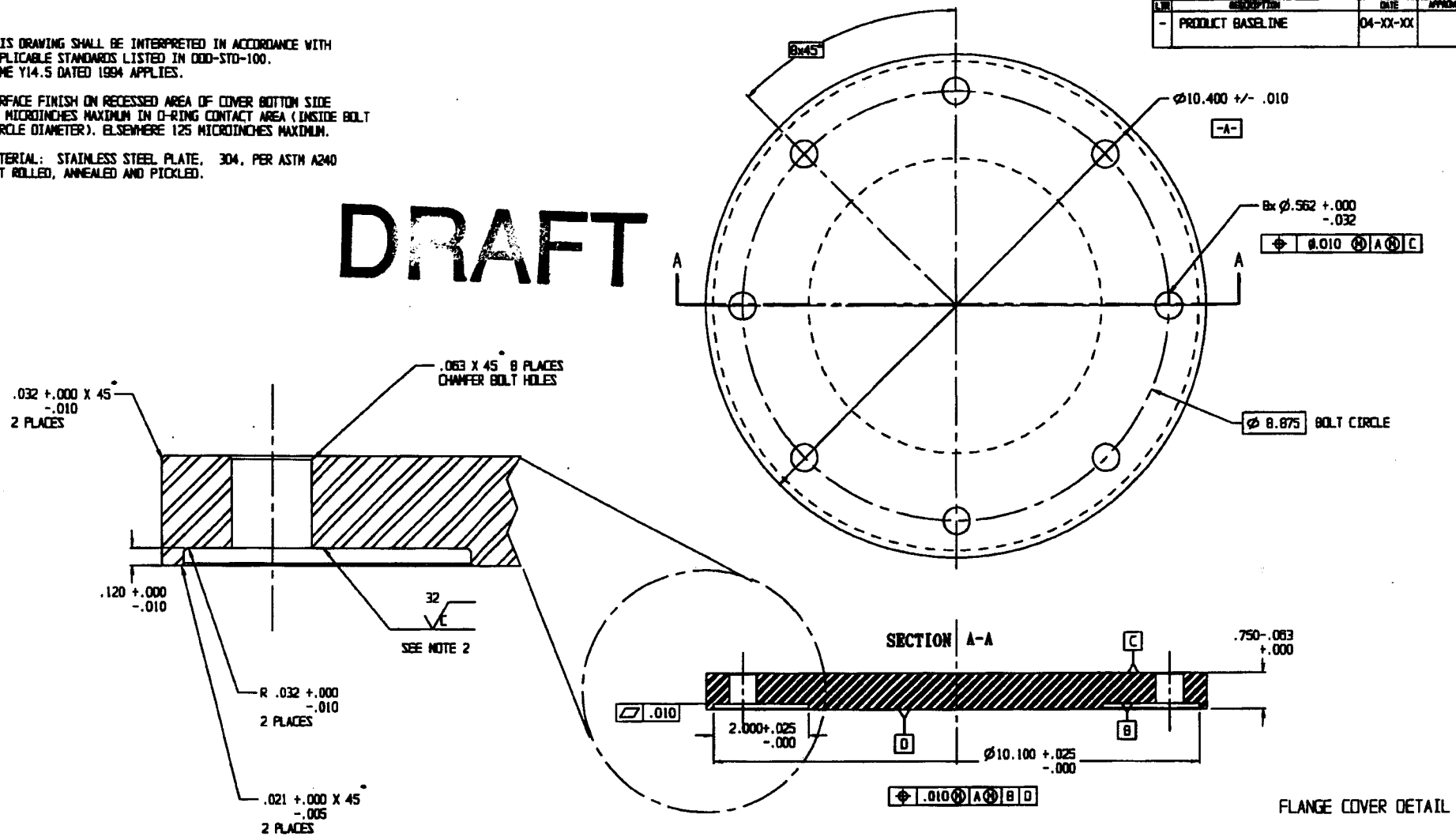

FLANGE COVER DETAIL

XXXXXXXX NEXT ASSY	USED ON	APPLICATION	
04-XX-XX	NLB	BONAVITO	DESIGN ACTIVITY U.S. ARMY RESEARCH DEVELOPMENT & ENGINEERING COMMAND SCIENCES CHEMICAL BIOLOGICAL CENTER
FLANGE COVER FOR 7X27 INCH MULTIPLE ROUND CONTAINER.			
SIZE D	CAGE CODE 81361	M727007	
SCALE NONE	UNIT WT	SHEET 1 OF 1	

DISTRIBUTION STATMENT A.

APPROVED FOR PUBLIC RELEASE; DISTRIBUTION IS UNLIMITED.

Monday, March 01, 2004 09:27:00

REVISION			
LTR	DESCRIPTION	DATE	APPROVED
-	PRODUCT BASELINE	04-XX-XX	

NOTES:

1. THIS DRAWING SHALL BE INTERPRETED IN ACCORDANCE WITH APPLICABLE STANDARDS LISTED IN DOD-STD-100. ASME Y14.5 DATED 1994 APPLIES.
2. THE REQUIRED FINISH AT THE TOP FLANGE SURFACE IS 125 MICROINCHES MAXIMUM. HOWEVER, THE O-RING GROOVE SURFACE FINISH, BOTH SIDES AND BOTTOM IS 32 MICROINCHES MAXIMUM.
3. BREAK THESE CORNERS APPROXIMATELY 0.005 RADIUS.
4. MATERIAL: STAINLESS STEEL PLATE, 304, PER ASTM A240 HOT ROLLED, ANNEALED, AND PICKLED..

DRAFT

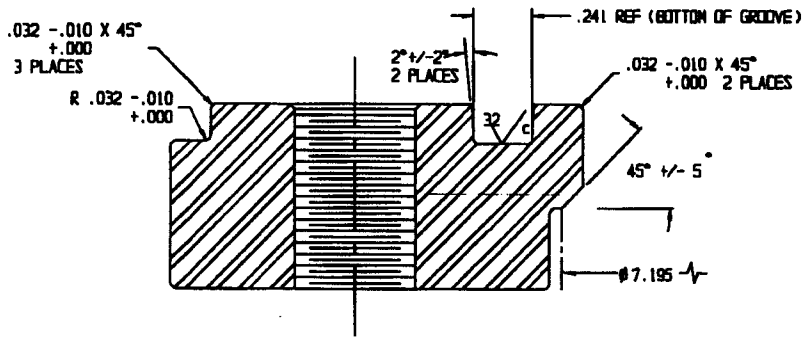

DETAIL-B

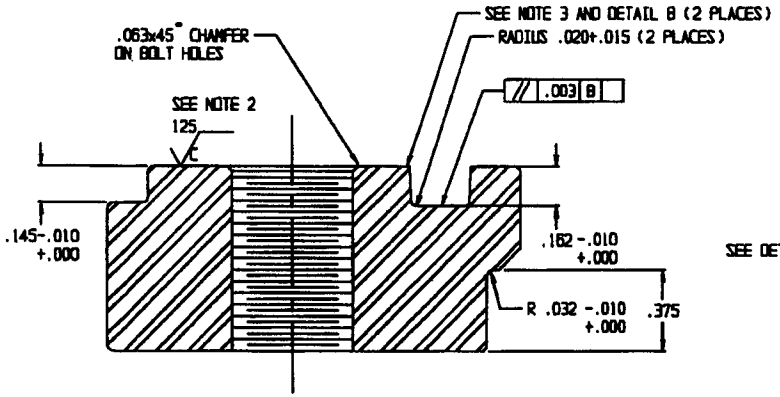

DETAIL-A

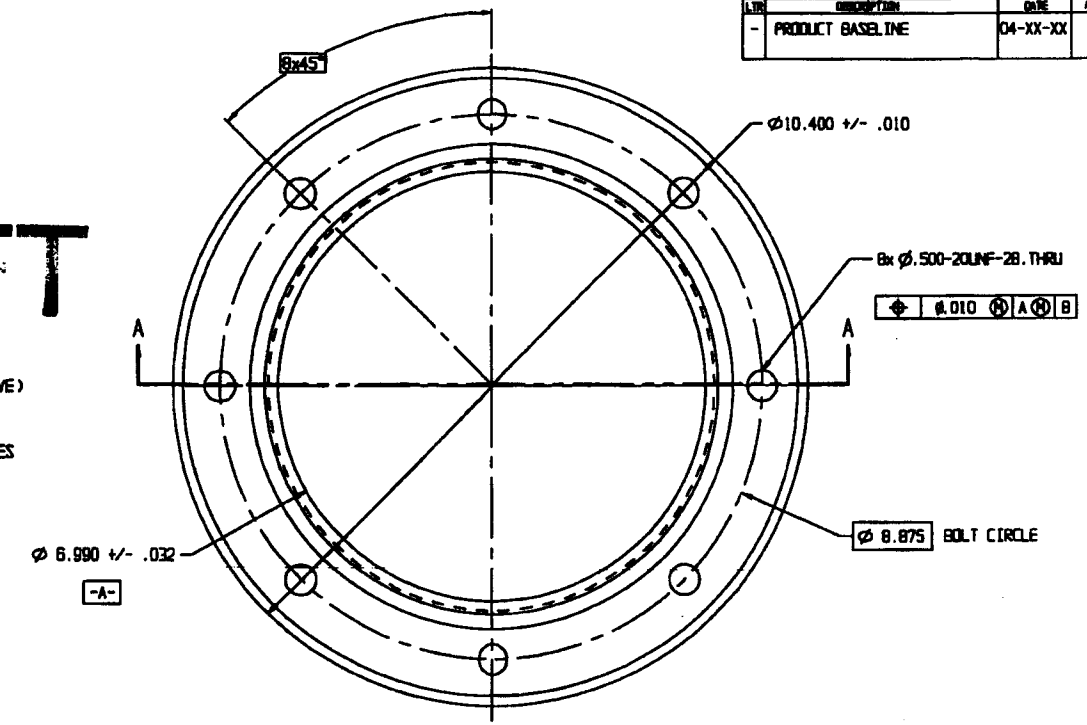

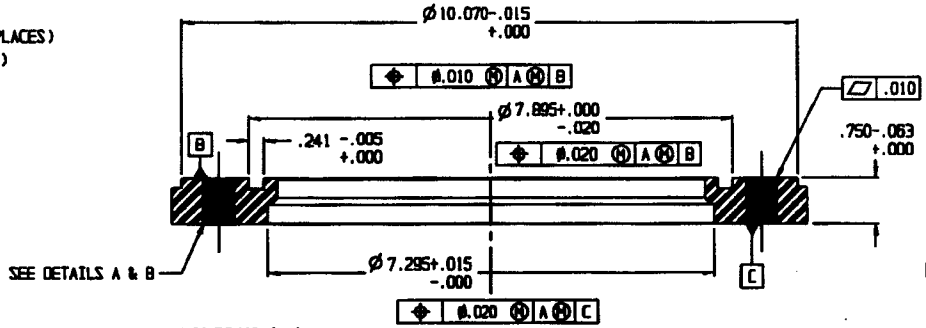

SECTION A-A

FLANGE DETAIL

DISTRIBUTION STATMENT A.

APPROVED FOR PUBLIC RELEASE;
DISTRIBUTION IS UNLIMITED.

NEXT ASSY	USED ON	04-XX-XX	DESIGN ACTIVITY: U.S. ARMY MEDICAL DEVELOPMENT & ENGINEERING COMMAND, GEOSPACE CHEMICAL BIOLOGICAL CENTER
APPLICATION		NLB / BONAVITO	FLANGE FOR 7X27 INCH MULTIPLE ROUND CONTAINER.
			SIZE B / CAGE CODE 81361 / M727005
			SCALE NONE / UNIT WT / SHEET 1 OF 1

Tuesday, May 11, 2004 16:04:33

REVISION			
LTR	DESCRIPTION	DATE	APPROVED
-	PRODUCT BASELINE		

NOTE:

1. SERIALIZE FLANGE AND FLANGE COVER WITH A SIZE 0.125 INCH METAL STAMP. PUNCH AT LEAST .015" DEEP. MARKINGS ON COVER AND FLANGE MUST BE IN LINE WITH EACH OTHER DIRECTLY BENEATH A BOLT HOLE AND BE IDENTICAL AS SHOWN IN THE FIGURES. STAMPINGS SHOULD BE ON SIDE EDGE AS SHOWN.

   THE SERIAL NUMBER FORMAT SHOULD START WITH: JJ 276 PB ON THE FIRST FLANGE/COVER PAIR AND RUN THROUGH JJ 550 PB ON THE LAST PAIR.

2. STENCIL UN POP MARKINGS IN BLACK INK WITH 1/2 INCH HIGH LETTERING MINIMUM ALONG THE LENGTH OF THE CONTAINER TUBE BODY AS SHOWN IN THE DRAWING. THE UN MARKINGS SHOULD READ:

U
n

1A2/X70.5/S/05
USA/DOD/AYA

DRAFT

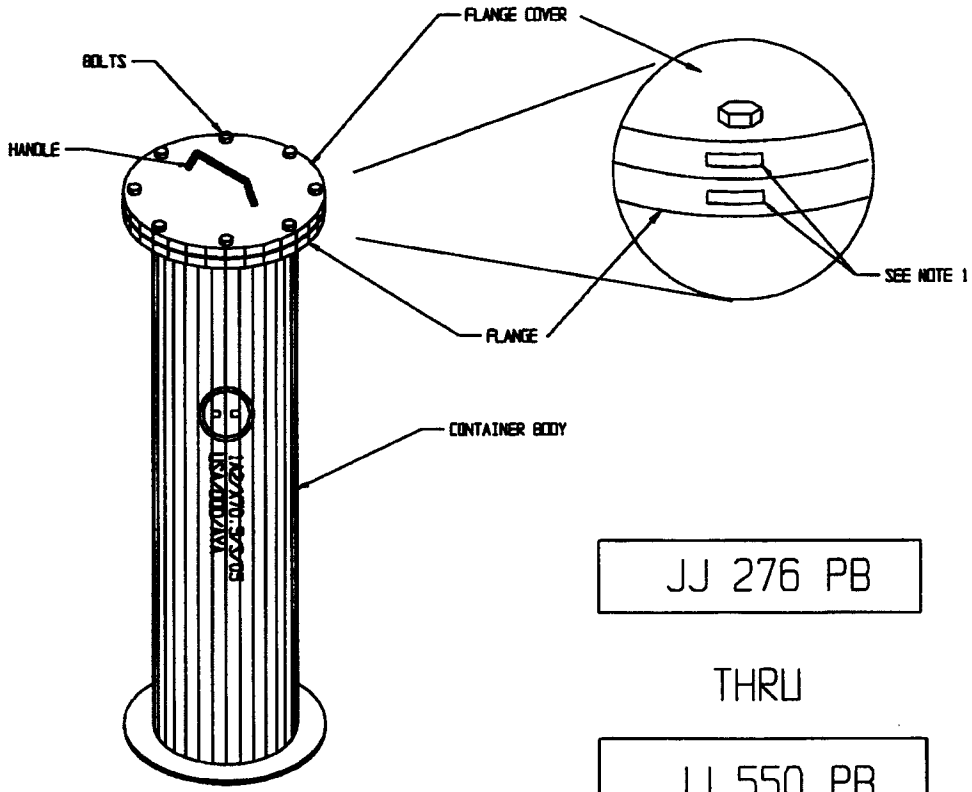

JJ 276 PB

THRU

JJ 550 PB

DISTRIBUTION STATEMENT A.

APPROVED FOR PUBLIC RELEASE;
DISTRIBUTION IS UNLIMITED.

PUNCH DESC	2/24/04	DESIGN ACTIVITY: U.S. ARMY, GOODWIN CHEMICAL BIOLOGICAL CENTER, ROCK ISLAND ARSENAL, ROCK ISLAND, ILLINOIS
NEXT ASSEMBLY	BONAVITO / BONAVITO	MARKINGS FOR 7X27 INCH MULTIPLE ROUND CONTAINER (SERIAL NUMBERS AND UN POP)
APPLICATION		SIZE D · CAGE CODE 81361 · SN M727 2005
		SCALE NONE · UNIT WT · SHEET 1 OF 1