NOTES:—
1—SPEC MIL-A-2550 ANSI Y14.5M-1982 AND MIL-F-70546 APPLY.
2—MATERIAL:—ALUMINUM ALLOY, BAR, 7075-T76, SPEC ASTM B221.
3—FINISH 125/ ALL OVER EXCEPT AS NOTED.
4—NO BURRS PERMITTED ON THIS SURFACE.
5—NO BURRS PERMITTED IN FLASH HOLES. SEE NOTE 6.

6—AFTER HOLES ARE FINISHED, CAVITY MUST RECEIVE PLUG GAGE (.675 MIN. DIA) OF 7.27 MIN. LENGTH.
7—INSPECT TO KNURL.
8—

10—MECHANICAL PROPERTIES 0.2 % YIELD STRENGTH—63,000 PSI MIN ELONGATION—7% MIN.

11—SURFACE TREATMENT: FINISH 7.2.1 OF MIL-STD-171. FRONT THREAD AND CAVITY SHALL BE MASKED.
ALTERNATE: FINISH 7.2.1 OF MIL-STD-171. THE ENTIRE SURFACE IS PERMISSIBLE PROVIDED THAT THE PROCESS IS APPROVED BY THE TECHNICAL AGENCY. HOUSING SHALL WITHSTAND A 96 HOUR SALT SPRAY TEST ON BOTH FINISHES.

REVISIONS			
SYM	DESCRIPTION	DATE	APPROVAL
M	NOR M4J2019 940901	950123	RLV
N	NOR R9J2012 990422	990611	TPT
P	NOR R3J2059 031112	031204	FET

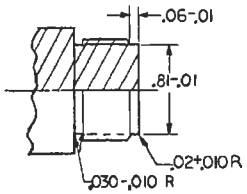

DETAIL C
SCALE 2/1

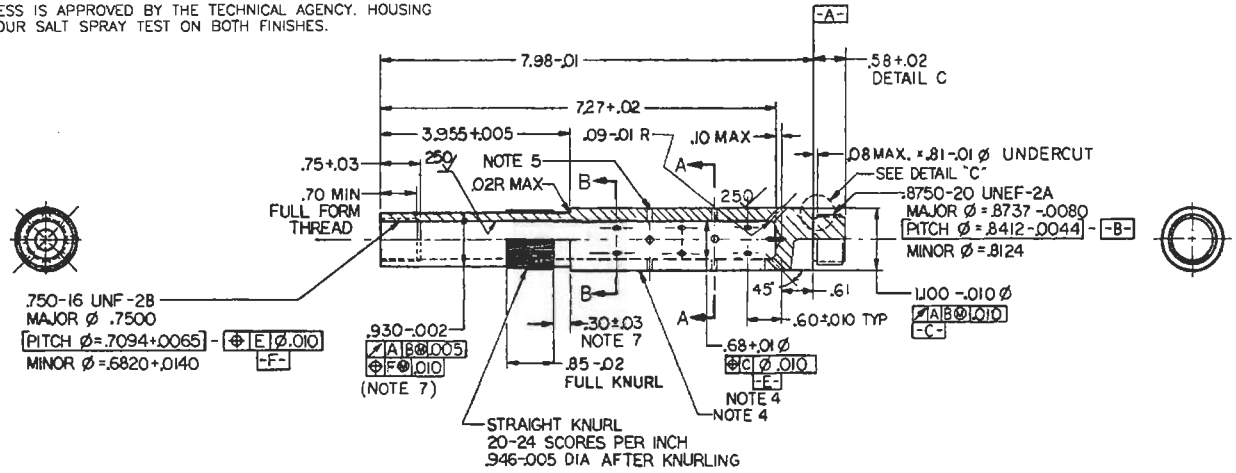

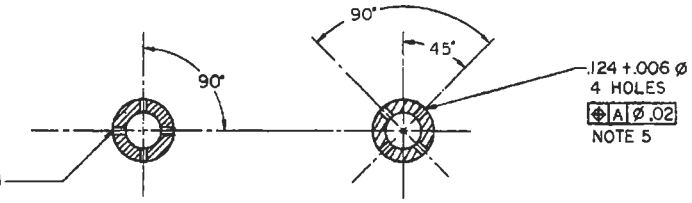

SECTION A-A
TYP. 3 PLACES
SPACED AS SHOWN
(FIRST ROW OF HOLES AT 45°)

SECTION B-B
TYP. 3 PLACES
SPACED AS SHOWN

DISTRIBUTION STATEMENT A
APPROVED FOR PUBLIC RELEASE;
DISTRIBUTION IS UNLIMITED.

PART NO. 9327833

NEXT ASSY	USED ON
9381586	M816 8MM MORT
9381586	M853A1 8MM MORT
9327831	M819

APPLICATION

MECHANICAL PROPERTIES

DO NOT SCALE DRAWING
UNLESS OTHERWISE SPECIFIED DIMENSIONS ARE IN INCHES
TOLERANCES ON DECIMALS ±
FRACTIONS ± ANGLES ± 1°

ORIGINAL DATE OF DRAWING 78-03-22

U.S. ARMY ARMAMENT RESEARCH AND DEVELOPMENT CENTER
DOVER, NEW JERSEY 07801

HOUSING, CARTRIDGE

SIZE D | FSCM NO 19200 | 9327833

SCALE 1/1 | UNIT IN | SHEET