REVISIONS			
SYM	DESCRIPTION	DATE	APPROVAL
G	NOR M4J2019 940901	950123	RLV
H	NOR R3J2059 031112	031204	FET

NOTES:—

1-SPEC MIL-A-2550, ANSI Y14.5M-1982 AND SPEC MIL- F - 70546 APPLY.

2-THE MAXIMUM PERMISSIBLE HORIZONTAL TIR INCLUDING TWIST (EXCLUSIVE OF CANT) SHALL BE ±.025" WHEN REFERENCED TO SURFACES -A- AND -B- SIMULTANEOUSLY AND THE AVERAGE OF THE ALGEBRAIC SUM OF ALL SIX BLADES SHALL NOT EXCEED ±.013" TIR.

3-ASSEMBLE BY PRESSING ON FIN HUB UNTIL SEATED ON SURFACE INDICATED. MAX GAP OF .010 IS PERMITTED.

4-MARK LOT NUMBER, YEAR OF MANUFACTURE AND DESIGNATION. MARK WITH LETTERS AND FIGURES .125 HIGH USING INK, STENCIL, BLACK NO. 37038, SPEC A-A-208, TYPE I, III, OR IV. SEE NOTE 5.

5-ALTERNATIVE:-INK, MARKING, OPAQUE, FOR NONPOROUS SURFACES (FOR AUTOMATIC OR SEMI-AUTOMATIC MACHINE APPLICATION) DRAWING NO. 9211788, COLOR BLACK NO. 37038.

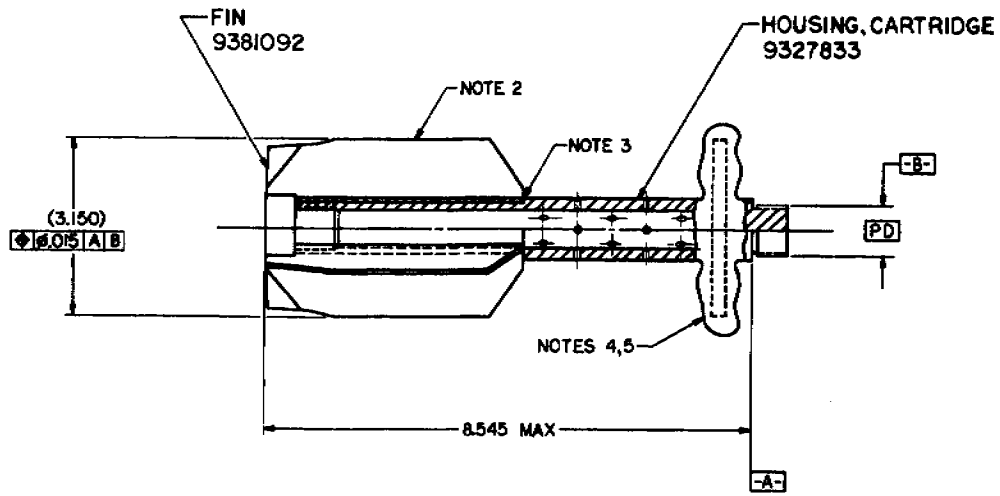

DISTRIBUTION STATEMENT A

APPROVED FOR PUBLIC RELEASE;
DISTRIBUTION IS UNLIMITED.

PART NO. 9381586

12953389	M816	81MM MORT M853A1	
9352621			
NEXT ASSY	USED ON		
APPLICATION			

DO NOT SCALE DRAWING

ORIGINAL DATE OF DRAWING 84-05-01

U.S. ARMY ARMAMENT RESEARCH AND DEVELOPMENT CENTER DOVER, NEW JERSEY 07801

FIN, MORTAR CARTRIDGE: 81 MM, M 29

SIZE D | CAGE CODE 19200 | 9381586

SCALE 1/1 | UNIT WT. | SHEET 1 OF 1

NOTES:-

1-SPEC MIL-A-2550 ANSI Y14.5M-1982 AND MIL-F-70546 APPLY.
2-MATERIAL:-ALUMINUM ALLOY, BAR, 7075-T76, SPEC ASTM B221.
3-FINISH 125/ ALL OVER EXCEPT AS NOTED.
4-NO BURRS PERMITTED ON THIS SURFACE.
5-NO BURRS PERMITTED IN FLASH HOLES. SEE NOTE 6.

6-AFTER HOLES ARE FINISHED, CAVITY MUST RECEIVE PLUG GAGE (.675 MIN. DIA) OF 7.27 MIN. LENGTH.
7-INSPECT TO KNURL.
8-

10-MECHANICAL PROPERTIES 0.2 % YIELD STRENGTH-63,000 PSI MIN ELONGATION-7% MIN.

11-SURFACE TREATMENT: FINISH 7.2.1 OF MIL-STD-171. FRONT THREAD AND CAVITY SHALL BE MASKED.
ALTERNATE: FINISH 7.2.1 OF MIL-STD-171. THE ENTIRE SURFACE IS PERMISSIBLE PROVIDED THAT THE PROCESS IS APPROVED BY THE TECHNICAL AGENCY. HOUSING SHALL WITHSTAND A 96 HOUR SALT SPRAY TEST ON BOTH FINISHES.

REVISIONS			
SYM	DESCRIPTION	DATE	APPROVAL
M	NOR M4J2019 940901	950123	RLV
N	NOR R9J2012 990422	990611	TPT
P	NOR R3J2059 031112	031204	FET

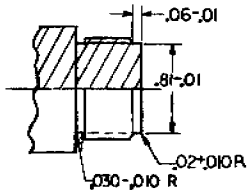

DETAIL C
SCALE 2/1

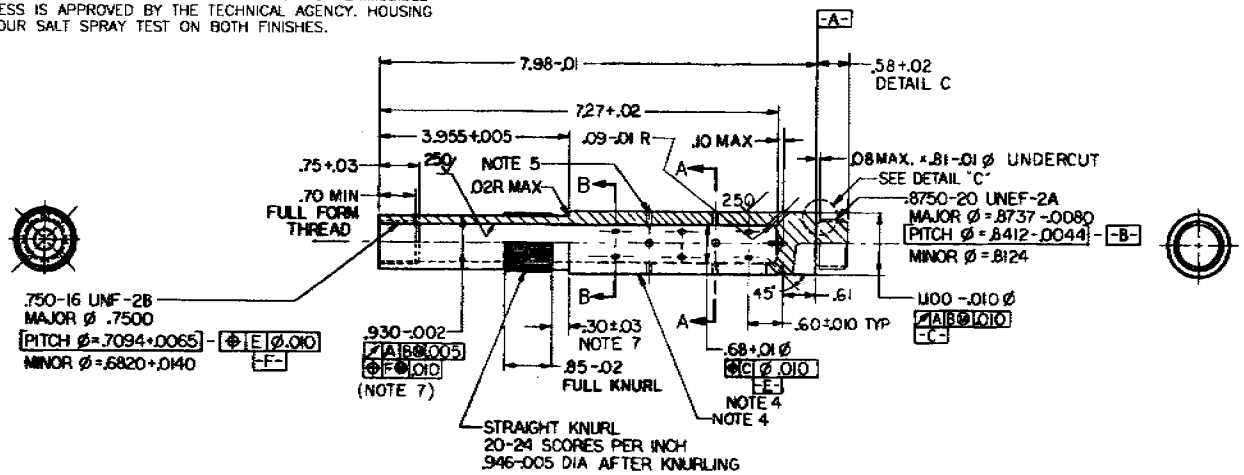

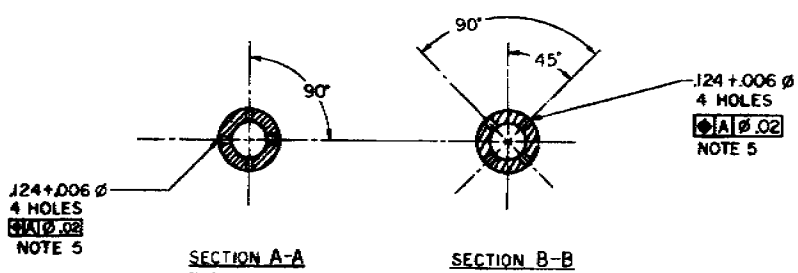

SECTION A-A
TYP. 3 PLACES
SPACED AS SHOWN
(FIRST ROW OF HOLES AT 45°)

SECTION B-B
TYP. 3 PLACES
SPACED AS SHOWN

DISTRIBUTION STATEMENT A
APPROVED FOR PUBLIC RELEASE; DISTRIBUTION IS UNLIMITED.

9381586	M816	
9381586	M853A1	
9327831	M819	
NEXT ASSY	USED ON	
APPLICATION		

DO NOT SCALE DRAWING
UNLESS OTHERWISE SPECIFIED DIMENSIONS ARE IN INCHES
TOLERANCES ON DECIMALS ±
FRACTIONS ± ANGLES ± 1°

ORIGINAL DATE OF DRAWING 78-03-22

PART NO. 9327833

U S ARMY ARMAMENT RESEARCH AND DEVELOPMENT CENTER
DOVER, NEW JERSEY 07801

HOUSING, CARTRIDGE

SIZE D | FSCM NO 19200 | 9327833

SCALE 1/1 | UNIT 9" | SHEET

NOTES:-

1-SPEC MIL-A-2550, MIL-F-70546 AND ANSI Y14.5 — 1973 APPLY.
2-MATERIAL:-EXTRUDED ALUMINUM ALLOY, 2014-T6, SPEC ASTM B221.
3-SURFACE FINISH 125 ALL OVER.
4-NO HOLLOW EXTRUSIONS PERMITTED.
5-CUTTER FOR RADIUSING BLADE EDGES MAY CUT INTO .15 R AND 1.115-.015Ø FOR A TOTAL WIDTH OF .15 MAX BUT MUST NOT BREAK INTO .02+.01 X 45°.
6-MECHANICAL PROPERTIES:-
YP=53,000 MIN
EL2=7% MIN
7- SURFACE TREATMENT: FINISH 7.2.1 OF MIL-STD-171. FIN SHALL WITHSTAND A 96 HOUR SALT SPRAY TEST.

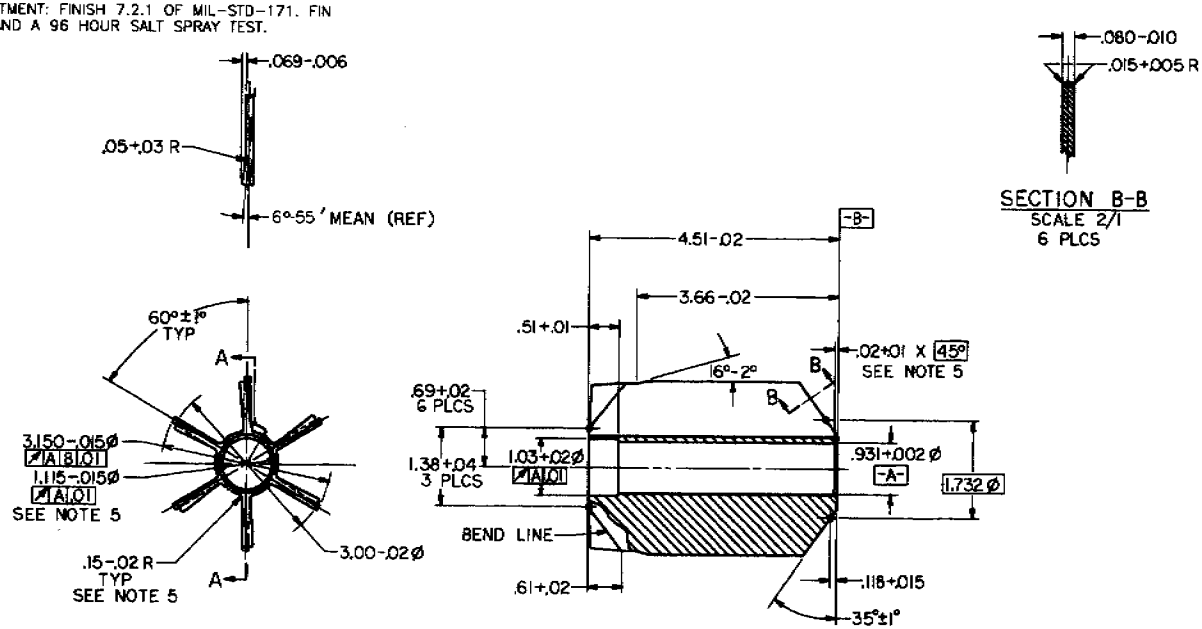

REVISIONS			
SYM	DESCRIPTION	DATE	APPROVAL
F	NOR M4J2019 940901	950123	RLV
G	NOR 9RJ2012 990422	990611	TPT
H	NOR R3J2059 031112	031204	FET

PART NO. 9381092

DISTRIBUTION STATEMENT A
APPROVED FOR PUBLIC RELEASE; DISTRIBUTION IS UNLIMITED.

9381586	M816	
9381586	6MM MORT M653A1	
NEXT ASSY	USED ON	
APPLICATION		

MECHANICAL PROPERTIES

DO NOT SCALE DRAWING
UNLESS OTHERWISE SPECIFIED DIMENSIONS ARE IN INCHES
TOLERANCES ON DECIMALS ±
FRACTIONS ± ANGLES ±

ORIGINAL DATE OF DRAWING 84-04-01
DRAFTSMAN JS3 CHECKER
ENGR HTR ENGR
ENGR ENGR

U S ARMY ARMAMENT RESEARCH AND DEVELOPMENT CENTER
DOVER, NEW JERSEY 07801

FIN

SIZE D | CAGE CODE 19200 | 9381092
SCALE 1/1 | UNIT WT | SHEET