NOTES:-

1-SPEC MIL-A-2550, MIL-F-70546 AND ANSI Y14.5 — 1973 APPLY.
2-MATERIAL:-EXTRUDED ALUMINUM ALLOY, 2014-T6, SPEC ASTM B221.
3-SURFACE FINISH 125 ALL OVER.
4-NO HOLLOW EXTRUSIONS PERMITTED.
5-CUTTER FOR RADIUSING BLADE EDGES MAY CUT INTO .15 R AND 1.115-.015Ø FOR A TOTAL WIDTH OF .15 MAX BUT MUST NOT BREAK INTO .02+.01 X 45°.
6-MECHANICAL PROPERTIES:-
YP=53,000 MIN
EL2=7% MIN
7- SURFACE TREATMENT: FINISH 7.2.1 OF MIL-STD-171. FIN SHALL WITHSTAND A 96 HOUR SALT SPRAY TEST.

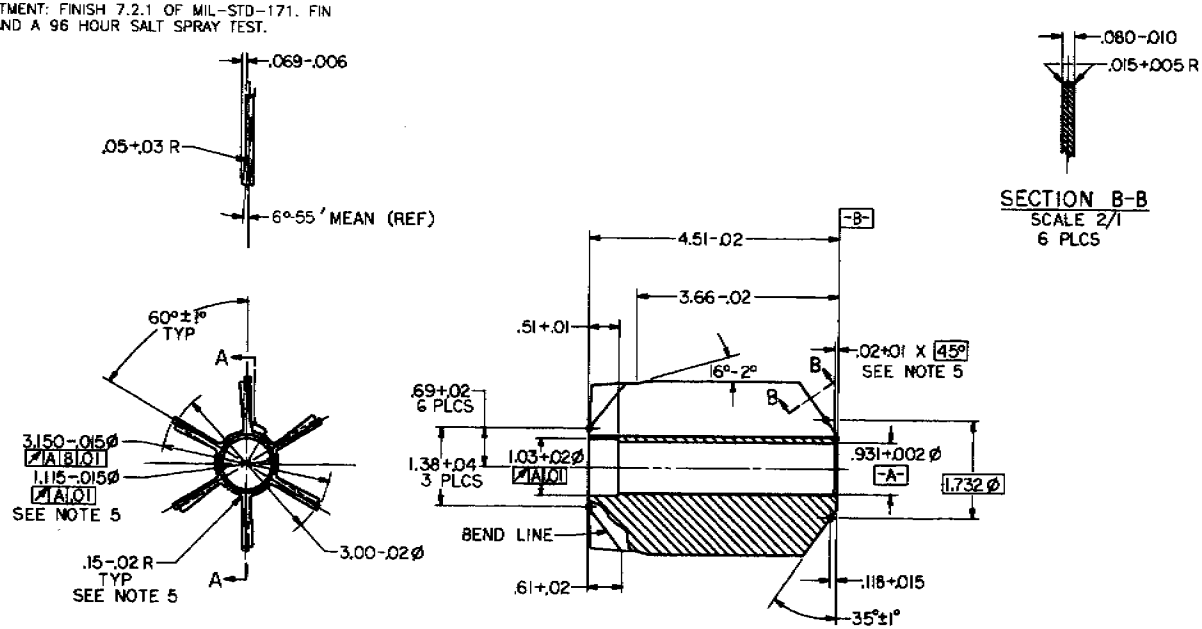

REVISIONS			
SYM	DESCRIPTION	DATE	APPROVAL
F	NOR M4J2019 940901	950123	RLV
G	NOR 9RJ2012 990422	990611	TPT
H	NOR R3J2059 031112	031204	FET

PART NO. 9381092

DISTRIBUTION STATEMENT A
APPROVED FOR PUBLIC RELEASE; DISTRIBUTION IS UNLIMITED.

9381586	M816	
9381586	6MM MORT M653A1	
NEXT ASSY	USED ON	
APPLICATION		

MECHANICAL PROPERTIES

DO NOT SCALE DRAWING
UNLESS OTHERWISE SPECIFIED DIMENSIONS ARE IN INCHES
TOLERANCES ON DECIMALS ±
FRACTIONS ± ANGLES ±

ORIGINAL DATE OF DRAWING 84-04-01
DRAFTSMAN JS3 CHECKER
ENGR HTR ENGR
ENGR ENGR

U S ARMY ARMAMENT RESEARCH AND DEVELOPMENT CENTER
DOVER, NEW JERSEY 07801

FIN

SIZE D | CAGE CODE 19200 | 9381092
SCALE 1/1 | UNIT WT | SHEET