Department of the Army
Program Manager for
Chemical Demilitarization
Aberdeen Proving Ground, Maryland

Chemical Stockpile Disposal Project

Programmatic Process Functional Analysis Workbook (FAWB)

Book 28

DFS, LIC, and MPF Pollution Abatement System and PAS Filter System

PAS/PFS

Revision 1, *Change 9*
January 23, 2004

NOTE: The PAS/PFS programmatic process FAWB applies to ANCDF, PBCDF, TOCDF and UMCDF.

ALL FAWB SYSTEMS

Book (Chapter[1])	System Identifier	FAWB Title
UTILITY SYSTEMS (Site-specific)		
1 (5.15)	NGLPG	Fuel Gas System (Natural Gas and Liquefied Petroleum Gas)
2 (5.14)	HYPU	Hydraulic Power Unit and Distribution System
3 (5.19)	BCS	Bulk Chemical Storage System
4 (5.16)	CAS	Compressed Air Systems (Plant, Instrument, and Life Support)
5 (5.22)	SGS	Steam Generation System
6 (5.26)	DMS	Door Monitoring System
7 (5.28)	PCS	Primary Cooling Systems
8 (5.12)	EPS	Electrical Distribution and Emergency Power System
9 (5.13)	—	(HVAC FAWB moved to Book 20 (Process Systems))
10 (5.17)	WATER	Water Systems (Process Water, Potable Water, and Water Treatment Systems)
11 (5.21)	CDSS	Central Decon Supply System
12 (5.18)	TSHS	Toxic Storage and Handling Systems (Agent Collection, Spent Decon, and Sumps)
13 (5.20)	ACSWS	Acid and Caustic Storage and Wash System (DELETED[2])
14 (5.27)	FDSS	Fire Detection and Suppression System
15 -19	—	(not assigned; reserved for future use)
PROCESS SYSTEMS (Programmatic)		
20	HVAC	Heating, Ventilation, and Air Conditioning System
21	RHS	Rocket Handling System
22	PHS	Projectile Handling System
23	MHS	Mine Handling System
24	BCHS	Bulk Container Handling System
25	DFS	Deactivation Furnace System
26	LIC	Liquid Incineration System
27	MPF	Metal Parts Furnace System
28[3]	PAS/PFS	DFS, LIC and MPF Pollution Abatement System and PAS Filter System
29	BRA	Brine Reduction Area and BRA PAS
30	CHB	Container Handling Building
31	ACAMS	Automatic Continuous Air Monitoring System
32	TCE	Treaty Compliance Equipment
33[4]	DUN	Dunnage Incineration System and DUN PAS

[1] TOCDF has original “chapter” numbers for utility system FAWBs.

[2] The ACSWS FAWB was deleted.

[3] The PAS and PFS draft FAWBs were combined into a single PAS/PFS FAWB (Book 28).

[4] A DUN FAWB is not being developed per direction of PM-CSD on 9-10-98.

CONTENTS

SECTION 1 INTRODUCTION 1-1
1.1 CSD Project Baseline Technology Overview 1-1
1.2 Background 1-1
1.3 Programmatic Process FAWB Systems 1-2
1.4 *Programmatic* Process FAWB *Purpose* 1-4
1.5 *Programmatic* Process FAWB Organization 1-5
1.6 *Programmatic* Process FAWB Revisions 1-*5*

SECTION 2 SYSTEM OVERVIEW 2-1
2.1 Purpose and Function 2-1
2.2 Operational Summary 2-1
2.3 Process Design Basis Summary 2-2
2.4 System Boundaries and Interfaces 2-4

SECTION 3 PROCESS DESCRIPTION 3-1
3.1 Introduction 3-1
3.2 Description of Subsystems 3-1
3.2.1 Quench Tower 3-1
3.2.2 Venturi Scrubber 3-3
3.2.3 Quench Brine 3-4
3.2.4 Packed-Bed Scrubber Tower 3-5
3.2.4.1 Clean Liquor 3-6
3.2.5 Mist Eliminator Vessel 3-*8*
3.2.6 PAS Filter System 3-*9*
3.2.6.1 PFS Clean Liquor Air Coolers 3-9
3.2.6.2 PFS Gas Reheater Unit 3-10
3.2.6.3 PFS Carbon Filter Unit 3-*12*
3.2.6.4 PFS Carbon Filter Unit Switching 3-13
3.2.7 Exhaust Blower 3-*14*
3.2.7.1 TOCDF Exhaust Blower Lube Oil System 3-*15*
3.2.7.2 TOCDF Emergency Exhaust Blowers 3-*16*
3.2.8 Common Stack and Monitoring 3-*16*
3.2.9 TOCDF PAS Condensate Removal System 3-*17*
3.2.10 Recovered Water System 3-*17*
3.2.11 PAS Sump System 3-*18*
3.3 Control Sequence List 3-*18*
3.3.1 PAS/PFS Startup Sequence 3-*18*
3.3.2 PAS Normal 3-*21*
3.3.3 Normal PAS/PFS Shutdown 3-*22*
3.3.4 PAS/PFS Valve Manifold 3-22
3.3.4.1 DFS 3-23
3.3.4.2 LIC 1 System 3-25
3.3.4.3 LIC 2 System 3-25

CONTENTS (cont'd)

SECTION 3 (cont'd)
3.3.4.4 MPF ... 3-26
3.3.4.5 Common Manifold and Spare Filter ... 3-26
3.3.4.6 Uninterlocked Valves ... 3-27
3.3.5 Emergency PAS/PFS Shutdown ... 3-*27*
3.3.6 Loss of Power ... 3-*27*

SECTION 4 COMPONENT SUMMARY ... 4-1
4.1 PAS/PFS System Components ... 4-1
4.1.1 Quench Tower ... 4-1
4.1.2 Venturi Scrubber ... 4-3
4.1.3 Scrubber Tower ... 4-4
4.1.4 Mist Eliminator Vessel ... 4-5
4.1.5 PAS Filter System (ANCDF, PBCDF, and UMCDF) ... 4-8
4.1.5.1 PFS Clean Liquor Air Cooler ... 4-8
4.1.5.2 PFS Gas Reheater Unit ... 4-10
4.1.5.3 PFS Carbon Filter Unit ... 4-12
4.1.6 Exhaust Blower ... 4-12
4.1.7 Recirculation, Transfer and Feed Pumps ... 4-14
4.1.7.1 Quench Brine Pumps ... 4-14
4.1.7.2 Clean Liquor Pumps ... 4-16
4.1.7.3 Mist Eliminator Water Return Pump ... 4-17
4.1.7.4 Mist Eliminator Recirculation Pump ... 4-19
4.1.7.5 Recovered Water Feed Pump ... 4-19
4.1.7.6 PAS Area Sump Pump ... 4-20
4.1.8 Recovered Water Tank ... 4-20
4.1.9 Common Stack ... 4-21
4.2 Equipment Power Sources ... 4-22

APPENDIXES

A Acronyms and Abbreviations ... A-1
B FAWB Notes ... B-1
C Alarm and Interlock Matrices ... C-1
D PLC Automatic Control Sequences ... D-1
D.1 PAS/PFS PLC Automatic Control Sequences ... D-1
E Operator Screens ... E-1
F Instrument Ranges ... F-1
G Intercontroller Communications ... G-1
H References ... H-1

CONTENTS (cont'd)

FIGURES

E-1 ANCDF Advisor PC Screen DFS PAS Quench, DFQ E-3
E-2 ANCDF Advisor PC Screen DFS PAS Venturi, DFV E-3
E-3 ANCDF Advisor PC Screen DFS PAS Scrubber, DFS E-4
E-4 ANCDF Advisor PC Screen DFS PAS Mist Eliminator, DFD E-4
E-5 ANCDF Advisor PC Screen DFS Induced Draft, DFI E-5
E-6 ANCDF Advisor PC Screen DFS Clean Liquor Cooler 1 (DC1) E-5
E-7 ANCDF Advisor PC Screen DFS Clean Liquor Cooler 2 (DC2) E-6
E-8 ANCDF Advisor PC Screen DFS PAS Filter System (DFF) E-6
E-9 ANCDF Advisor PC Screen LIC 2 PAS Quench, LQ2 ..... E-7
E-10 ANCDF Advisor PC Screen LIC 2 PAS Venturi, LV2 ..... E-7
E-11 ANCDF Advisor PC Screen LIC 2 PAS Scrubber, LS2 ..... E-8
E-12 ANCDF Advisor PC Screen LIC 2 PAS Mist Eliminator, LD2 ..... E-8
E-13 ANCDF Advisor PC Screen LIC PAS Spare Mist Eliminator, LDS E-9
E-14 ANCDF Advisor PC Screen LIC 2 Induced Draft, LI2 ..... E-9
E-15 ANCDF Advisor PC Screen LIC2 Clean Liquor Cooler (L2C) E-10
E-16 ANCDF Advisor PC Screen LIC2 PAS Filter System (L2F) E-10
E-17 ANCDF Advisor PC Screen MPF PAS Quench, MPQ E-11
E-18 ANCDF Advisor PC Screen MPF PAS Venturi, MPV E-11
E-19 ANCDF Advisor PC Screen MPF PAS Scrubber, MPS E-12
E-20 ANCDF Advisor PC Screen MPF PAS Mist Eliminator, MPD E-12
E-21 ANCDF Advisor PC Screen MPF/DFS PAS Spare Mist Eliminator, MDS E-13
E-22 ANCDF Advisor PC Screen MPF Induced Draft, MPI E-13
E-23 ANCDF Advisor PC Screen MPF Clean Liquor Cooler (MFC) E-14
E-24 ANCDF Advisor PC Screen MPF PAS Filter System (MFF) E-14
E-*25* TOCDF Advisor PC Screen DFS PAS Quench, DFQ E-*15*
E-*26* TOCDF Advisor PC Screen DFS PAS Venturi, DFV E-*15*
E-*27* TOCDF Advisor PC Screen DFS PAS Scrubber, DFS E-*16*
E-*28* TOCDF Advisor PC Screen DFS PAS *Mist Eliminator*, DFD E-*16*
E-*29* TOCDF Advisor PC Screen DFS Induced Draft, DFI E-*17*
E-*30* TOCDF Advisor PC Screen DFS Emergency Induced Draft, DFE E-*17*
E-*31* TOCDF Advisor PC Screen LIC 1 PAS Quench, LQ1 ..... E-*18*
E-*32* TOCDF Advisor PC Screen LIC 1 PAS Venturi, LV1 ..... E-*18*
E-*33* TOCDF Advisor PC Screen LIC 1 PAS Scrubber, LS1 ..... E-*19*
E-*34* TOCDF Advisor PC Screen LIC 1 PAS *Mist Eliminator*, LD1 ..... E-*19*
E-*35* TOCDF Advisor PC Screen LIC PAS Spare *Mist Eliminator*, LDS E-*20*
E-*36* TOCDF Advisor PC Screen LIC 1 Induced Draft, LI1 ..... E-*20*
E-*37* TOCDF Advisor PC Screen LIC 2 PAS Quench, LQ2 ..... E-*21*
E-*38* TOCDF Advisor PC Screen LIC 2 PAS Venturi, LV2 ..... E-*21*
E-*39* TOCDF Advisor PC Screen LIC 2 PAS Scrubber, LS2 ..... E-*22*
E-*40* TOCDF Advisor PC Screen LIC 2 PAS *Mist Eliminator*, LD2 ..... E-*22*
E-*41* TOCDF Advisor PC Screen LIC 2 Induced Draft, LI2 ..... E-*23*

CONTENTS (cont'd)

FIGURES (cont'd)

E-42 TOCDF Advisor PC Screen MPF PAS Quench, MPQ.....E-23
E-43 TOCDF Advisor PC Screen MPF PAS Venturi, MPV.....E-24
E-44 TOCDF Advisor PC Screen MPF PAS Scrubber, MPS E-24
E-45 TOCDF Advisor PC Screen MPF PAS *Mist Eliminator*, MPD.....E-25
E-46 TOCDF Advisor PC Screen MPF/DFS PAS Spare *Mist Eliminator*, MDS E-25
E-47 TOCDF Advisor PC Screen MPF Induced Draft, MPI E-26
E-48 TOCDF Advisor PC Screen MPF Emergency Induced Draft, MPE.....E-26
E-49 TOCDF Advisor PC Screen Recovered Water System (RWS).....E-27
E-50 UMCDF Advisor PC Screen DFS Clean Liquor Cooler 1 (DC1).....E-27
E-51 UMCDF Advisor PC Screen DFS Clean Liquor Cooler 2 (DC2).....E-28
E-52 UMCDF Advisor PC Screen DFS PAS Filter System (DFF).....E-28
E-53 UMCDF Advisor PC Screen LIC1 Clean Liquor Cooler (L1C).....E-29
E-54 UMCDF Advisor PC Screen LIC1 PAS Filter System (L1F).....E-29
E-55 UMCDF Advisor PC Screen LIC2 Clean Liquor Cooler (L2C).....E-30
E-56 UMCDF Preliminary Advisor PC Screen LIC2 PAS Filter System (L2F).....E-30
E-57 UMCDF Preliminary Advisor PC Screen MPF Clean Liquor Cooler (MFC).....E-31
E-58 UMCDF Preliminary Advisor PC Screen MPF PAS Filter System (MFF) E-31

CONTENTS (cont'd)

TABLES

1.1 Programmatic Process FAWBs 1-3
1.2 Site-Specific Utility FAWBs 1-4
1.3 Organization of the Programmatic Process FAWBs 1-6
2.1 UMCDF PAS Exhaust Gas Constituent Removal Efficiencies 2-3
2.2 UMCDF PFS Process Design Parameters 2-3
3.1 Quench Tower Spray Bank Nozzle Configuration (Normal/Emergency) 3-2
3.2 *Maximum* Quench Tower Brine Flow Rates (gpm) 3-2
3.3 Venturi Scrubber Brine Flow Rates (gpm) 3-4
3.4 *Maximum* Scrubber Tower Clean Liquor Flow Rates (gpm) 3-7
3.5 DFS PFS Filter Combinations 3-24
4.1 DFS PAS Quench Tower Design Parameters 4-2
4.2 LIC PAS Quench Tower Design Parameters 4-2
4.3 MPF PAS Quench Tower Design Parameters 4-2
4.4 DFS PAS Venturi Scrubber Design Parameters 4-3
4.5 LIC PAS Venturi Scrubber Design Parameters 4-3
4.6 MPF PAS Venturi Scrubber Design Parameters 4-4
4.7 DFS PAS Scrubber Tower Design Parameters 4-4
4.8 LIC PAS Scrubber Tower Design Parameters 4-5
4.9 MPF PAS Scrubber Tower Design Parameters 4-5
4.10 DFS PAS Mist Eliminator Vessel Design Parameters 4-6
4.11 LIC PAS Mist Eliminator Vessel Design Parameters 4-6
4.12 MPF PAS Mist Eliminator Vessel Design Parameters 4-7
4.13 MPF/DFS Mist Eliminator Vessel (Spare) Design Parameters 4-7
4.14 LIC Mist Eliminator Vessel (Spare) Design Parameters 4-8
4.15 DFS PFS Clean Liquor Air Cooler Design Parameters 4-9
4.16 LIC PFS Clean Liquor Air Cooler Design Parameters 4-9
4.17 MPF PFS Clean Liquor Air Cooler Design Parameters 4-10
4.18 Air Cooler Empty-Out Pump Design Parameters 4-10
4.19 DFS PFS Gas Reheater Design Parameters 4-10
4.20 LIC PFS Gas Reheater Design Parameters 4-11
4.21 MPF PFS Gas Reheater Design Parameters 4-11
4.22 DFS PFS Reheater Blower Design Parameters 4-11
4.23 LIC PFS Reheater Blower Design Parameters 4-12
4.24 MPF PFS Reheater Blower Design Parameters 4-12
4.25 DFS Exhaust Blower Design Parameters 4-13
4.26 LIC Exhaust Blower Design Parameters 4-13
4.27 MPF Exhaust Blower Design Parameters 4-14
4.28 TOCDF MPF and DFS Emergency Exhaust Blower Design Parameters 4-14
4.29 DFS Quench Brine Pump Design Parameters 4-15

CONTENTS (cont'd)

TABLES (cont'd)

4.30 LIC Quench Brine Pump Design Parameters 4-15
4.31 MPF Quench Brine Pump Design Parameters 4-16
4.32 DFS Clean Liquor Pump Design Parameters 4-16
4.33 LIC Clean Liquor Pump Design Parameters 4-17
4.34 MPF Clean Liquor Pump Design Parameters 4-17
4.35 DFS Mist Eliminator Water Return Pump Design Parameters 4-18
4.36 LIC Mist Eliminator Water Return Pump Design Parameters 4-18
4.37 MPF Mist Eliminator Water Return Pump Design Parameters 4-19
4.38 Mist Eliminator Recirculation Pump Design Parameters 4-19
4.39 Recovered Water Feed Pump Design Parameters 4-20
4.40 PAS Area Sump Pump Design Parameters 4-20
4.41 Recovered Water Tank Design Parameters 4-21
4.42 Common Stack Design Parameters 4-21
4.43 PAS/PFS Equipment Power Sources 4-22
D.1 PAS Advisor PC Screens D-3
D.2 Preliminary PFS Advisor PC Screens D-3
D.3 *ANCDF and* TOCDF DFS PAS PLC Automatic Control Sequences. Advisor PC Screen DFQ D-4
D.4 *ANCDF and* TOCDF DFS PAS PLC Automatic Control Sequences. Advisor PC Screen DFV D-5
D.5 *ANCDF and* TOCDF DFS PAS PLC Automatic Control Sequences. Advisor PC Screen DFS D-8
D.6 *ANCDF and* TOCDF DFS PAS PLC Automatic Control Sequences. Advisor PC Screen DFD D-12
D.7 *ANCDF and* TOCDF DFS PAS PLC Automatic Control Sequences. Advisor PC Screen DFI D-14
D.8 TOCDF DFS PAS PLC Automatic Control Sequences. Advisor PC Screen DFE D-16
D.9 *ANCDF and* TOCDF LIC PAS PLC Automatic Control Sequences. Advisor PC Screen LQ1 [LQ2] D-18
D.10 *ANCDF and* TOCDF LIC PAS PLC Automatic Control Sequences. Advisor PC Screen LV1 [LV2] D-20
D.11 *ANCDF and* TOCDF LIC PAS PLC Automatic Control Sequences. Advisor PC Screen LS1 [LS2] D-23
D.12 *ANCDF and* TOCDF LIC PAS PLC Automatic Control Sequences. Advisor PC Screen LD1 [LD2] D-27
D.13 *ANCDF and* TOCDF LIC PAS PLC Automatic Control Sequences. Advisor PC Screen LI1 [LI2] D-28
D.14 *ANCDF and* TOCDF MPF PAS PLC Automatic Control Sequences. Advisor PC Screen MPQ D-30
D.15 *ANCDF and* TOCDF MPF PAS PLC Automatic Control Sequences. Advisor PC Screen MPV D-31

CONTENTS (cont'd)

TABLES (cont'd)

D.16 *ANCDF and* TOCDF MPF PAS PLC Automatic Control Sequences. Advisor PC Screen MPS D-34
D.17 *ANCDF and* TOCDF MPF PAS PLC Automatic Control Sequences. Advisor PC Screen MPD..... D-38
D.18 *ANCDF and* TOCDF MPF PAS PLC Automatic Control Sequences. Advisor PC Screen MPI D-39
D.19 TOCDF MPF PAS PLC Automatic Control Sequences. Advisor PC Screen MPE..... D-41
D.20 ANCDF and TOCDF MPF PAS PLC Automatic Control Sequences. Advisor PC Screen RWS.....D-42
D.*21* UMCDF Preliminary DFS PFS PLC Automatic Control Sequences. Advisor PC Screen DFF..... D-*44*
D.*22* UMCDF Preliminary DFS PFS PLC Automatic Control Sequences. Advisor PC Screen DC1..... D-*56*
D.*23* UMCDF Preliminary DFS PFS PLC Automatic Control Sequences. Advisor PC Screen DC2..... D-*58*
D.*24* UMCDF Preliminary DFS PFS PLC Automatic Control Sequences. Advisor PC Screen MFF D-*60*
D.*25* UMCDF Preliminary DFS PFS PLC Automatic Control Sequences. Advisor PC Screen MFC..... D-*71*
D.*26* UMCDF Preliminary DFS PFS PLC Automatic Control Sequences. Advisor PC Screen L1F [L2F] D-*73*
D.*27* UMCDF Preliminary DFS PFS PLC Automatic Control Sequences. Advisor PC Screen L1C [L2C] D-*86*
E.1 PAS*/PFS* Advisor PC Screens E-1
F.1 PAS Instrumentation in TOCDF Loveland Instrument Calibration Database F-1

REVISION LOG

REV.#	PAGE(S)	REFERENCE AND DESCRIPTION OF CHANGE
0	NA	Initial Issue
1	*ii, B-1, C-1,2*	*Updated to reflect current status of programmatic process FAWBs.*
	2-1,4, 3-2,12,18,27, B-4, D-1,2, G-1	*Discussion clarification.*
	2-4, 3-3,17	*ECP TEMP2411PAS – Install piping from PAS-TANK-103 to MPF/DFS PAS*
	3-1,9, B-1,2,4 App.C, D-12,27,38.	*Updated to reflect changes identified during the October 2000 ANCDF PAS/PFS and January 2001 DFS/MPF review meetings.*
	3-2, B-3,4	*PLL DA 95-57-L – Quench tower liquid outlet modifications.*
	3-3,4,6,8,9,10, 11,12,13,14,16, 19,20,21,22,27, 28, B-2,3, App.D, App.E, App.F, App.H	*Updated to reflect current source documentation (e.g., P&IDs, PLC code, and SOPs).*
	3-5, 8, B-4, App C	*ECP TEMP2034PAS – PAS pH Piping Modifications. TEMP2090PAS & TEMP2149PAS – PAS Brine Corrosion Mod Piping Change*
	3-18	*ECP TEMP2614PAS – Install Minimum Flow Return Line for Recovered Water Pumps*
	3-18	*ECP TEMP2239PAS – PAS-SUMP-101 Discharge Piping Mod and Sample Drum Pumping Station*
	3-13,14, 3-22 thru 3-27	*DSIC input (PFS filter alignments).*
	3-27, 4-23	*ECP TEMP2578PAS – Generator Power for the Clean Liquor Pumps*
	4-6,7,8	*ECP ANEP1044PAS – Field Redlines for PAS Building & RFI C-PBCDF-003.*
	4-15	*ECP PBAP791PMP – PBCDF DFS quench brine pump motor power*
	4-16, 17	*ECP PBAC670PMP – PBCDF PFS Pumps*
	4-17	*ECP ANEP627PAS – PAS Filter System*
	4-17	*ECP UMAP477PAS – PAS Filter System Pumps*
	4-21	*PBCDF site input (common stack diameter)*
	Appendix A	*Updated with latest comprehensive acronym list.*
	B-4	*RFI C-PBCDF-001 – Clean liquor air cooler low temperature alarm time delay*
	C-85	*ECP TEMP2617PAS – Change Scrubber Packed Bed Alarm Setpoint*
	Appendix C	*Created new site-specific A&I matrices for ANCDF, PBCDF, and UMCDF based on the latest source documentation and site-specific input, including cited ECPs,*
	Appendix E	*Added ANCDF Advisor PC screens.*
1 CH 1	*Appendix C*	*Inserted revised UMCDF LIC PAS/PFS A&I matrix per ECP UMSF1083LIC.*
1 CH2	*Appendix C*	*Inserted revised UMCDF DFS PAS/PFS A&I matrix per ECP UMSF1128DFS.*
1 CH3	*Appendix C*	*Inserted revised UMCDF MPF PAS/PFS A&I matrix per ECPs UMSF1190ICS and UMSF1191MPF.*

REVISION LOG (CONT'D)

REV.#	PAGE(S)	REFERENCE AND DESCRIPTION OF CHANGE
1 CH4	*Appendix C*	*Inserted revised UMCDF LIC PAS/PFS A&I matrices per ECP UMSF1199LIC, which also splits the LIC PAS/PFS matrix into separate matrices for LIC 1 and LIC 2. Repaginated UMCDF MPF PAS/PFS matrix.*
1 CH5	*Appendix C*	*UMSF1199LIC corrections to UMCDF LIC 2 PAS/PFS A&I matrix.*
1 CH6	*C–3-14*	*Westinghouse Anniston (WA) Letter WSN-96-007830 – ANCDF Review of A&I Matrices for the MPF, MPF PAS, DFS, DFS PAS, LIC, and LIC PAS.*
	C–15-24	*WA Letter WSN-96-008536 – ANCDF Review of A&I Matrices for the LIC and LIC PAS per ECP-0993.*
	C–3-14	*WA Letter WSN-96-008537 – ANCDF Review of A&I Matrices for the DFS and DFS PAS per ECP-0992.*
	C–25-35	*WA Letter WSN-96-008538 – ANCDF Review of A&I Matrices for the MPF PAS per ECP-1003.*
	C–3-14	*WA Letter WSN-96-008300 – ANCDF Review of A&I Matrix for the DFS PAS in FAWB No.28.*
1 CH 7	*C-9,11,12, 13,23*	*WA Document Change Proposal (DCP) #04-014 – PASPFS Corrected Alarm and Interlock Matrixes to Reflect the As-Built and Tested Conditions*
	C-23	*WA DCP #3-0381 – Modification of Alarm and Interlock Table for PFS-BURN-201 Exhaust Temperature Condition*
	C-28	*WA ECP Closure Activity Request CAR-0973-DCC-00 – Software Changes for LIC/DFS/MPF*
1 CH 8	*C-4,5,6,19*	*WA DCP #AN-04-028 – Modification to the DFS, LIC and MPF PAS/PFS FAWB Book 28 A&I Matrix under AN-1069-ECP.*
1 CH 9	*C-6*	*WA DCP #AN-04-029 – Modification to the DFS, LIC and MPF PAS/PFS FAWB Book 28 A&I Matrix under AN-1223-ECP.*
	C-21,23,34	*WA DCP #AN-04-054 – Modification to the DFS, LIC and MPF PAS/PFS FAWB Book 28 A&I Matrix under AN-1216-ECP.*

SECTION 1
INTRODUCTION

1.1 CSD PROJECT BASELINE TECHNOLOGY OVERVIEW

The Office of the Project Manager for Chemical Stockpile Disposal (PMCSD) is responsible for the disposal of the United States' existing unitary chemical weapon stockpile. PMCSD manages execution of the design, construction, equipment acquisition/installation, systemization, plant operations, and closure of all CSD project sites.

The CSD project baseline technology consists of the following:

- mechanical disassembly or puncturing the munitions to remove chemical agent and any explosives or propellant,
- incineration of the chemical agent and any explosives and propellant, and
- thermal detoxification of metal parts and any contaminated dunnage.

This technology was demonstrated during a series of operational verification testing (OVT) campaigns at the Johnston Atoll Chemical Agent Disposal System (JACADS). JACADS represent*ed* the first generation of a full-scale facility implementation of the project baseline technology. JACADS *completed disposal* of the chemical agent and munitions stockpiled at Johnston Atoll *in November 2000.*

The second generation plants implementing the baseline technology include the following:

- Tooele Chemical Agent Disposal Facility (TOCDF), located at the Deseret Chemical Depot in Tooele, Utah;
- Anniston Chemical Agent Disposal Facility (ANCDF), located at the Anniston Army Depot near Anniston, Alabama;
- Umatilla Chemical Agent Disposal Facility (UMCDF), located at the Umatilla Chemical Depot near Hermiston, Oregon; and,
- Pine Bluff Chemical Agent Disposal Facility (PBCDF), located at the Pine Bluff Arsenal near Pine Bluff, Arkansas.

Unless otherwise noted, the programmatic functional analysis workbooks (FAWBs) for process systems apply to each of these CSD sites.

1.2 BACKGROUND

FAWBs for 25 plant systems were issued for JACADS in January 1985 by The Ralph M. Parsons Company (now the Parsons Infrastructure & Technology Group, Inc.). Parsons is the Design and Systems Integration Contractor (DSIC) for the CSD project. The FAWBs provided the basis for the facility control system's programmable logic

controller (PLC) and computer systems programming. The JACADS FAWBs were later revised by United Engineers & Constructors and, by the July 1989 issue, two additional systems had been added.

FAWBs for TOCDF were issued in April 1993 by Parsons. There were 28 plant systems defined for TOCDF; however, only 27 FAWBs were issued (The Residue Handling Area FAWB was not issued). Most of the TOCDF plant systems were the same as those for JACADS; however, there were some differences due to different plant configurations, system consolidations, and the inclusion of additional systems. The TOCDF systems contractor (SC) received the FAWBs and assumed responsibility for maintaining the set current with the TOCDF plant configuration and the evolution of its operational strategy. Utility system FAWBs also were developed for ANCDF, PBCDF and UMCDF. Their purpose is to assist the sites during utility systems equipment procurement, and to describe their use in facility operation. Utility system FAWBs are more site-specific, consist primarily of SC-procured equipment, and will be maintained by the individual demilitarization sites.

In September 1997, PMCSD began the development of programmatic process FAWBs for process systems common to all sites, eliminating the need to maintain separate process FAWBs at each site. Having a single set of process FAWBs provides a means to ensure operational consistency between the sites and to accurately record differences between the demil facilities. The programmatic process FAWBs serve as an invaluable training tool for the Systems Contractor for Training (SCT) to ensure consistent training on process systems for all sites, and to quickly identify site-specific training requirements.

1.3 PROGRAMMATIC PROCESS FAWB SYSTEMS

Sixteen process systems having minimal differences between sites were designated as programmatic systems. These programmatic process FAWBs are maintained as a single reference rather than at each site. Minor site configuration differences between the sites are highlighted in the FAWB discussions and tables. Fourteen of these 16 systems were included in the 28 original plant system FAWBs developed by the DSIC. For conciseness, the dunnage incinerator (DUN) and DUN pollution abatement system (PAS) FAWBs were to be combined into a single FAWB, for a total of 15 programmatic process FAWBs. However, development of a programmatic FAWB for the DUN and DUN PAS was suspended indefinitely at the direction of the PMCSD Operations Team (see FAWB Note B-1). In addition, FAWBs for the wet PAS and the PAS filter system (PFS) were combined into a single FAWB (see FAWB Note B-2). Therefore, a total of 13 programmatic FAWBs were developed for the process systems. The heating, ventilating, and air-conditioning (HVAC) FAWB originally was included as one of the utility system FAWBs produced for ANCDF in 1996 (HVAC FAWB was Book 9 for ANCDF Utility FAWBs). It has been recategorized as a process system and is included in the set of programmatic process FAWBs.

The programmatic process FAWBs are numbered in accordance with the convention established during production of the ANCDF and UMCDF utility system FAWBs. This convention reserves book numbers 1 through 19 for utility systems, and book numbers 20 through 34 for the process FAWBs. Programmatic process FAWB book numbers and

titles are listed in Table 1.1. The original TOCDF FAWB chapter numbers are shown for reference.

Twelve of the 28 original plant system FAWBs are designated as site-specific utility systems. For these systems, the SC is delivered an initial utility FAWB indicating the system design configuration and operational strategy. The SC maintains the utility FAWBs to reflect the site-specific configuration. The utility FAWBs are listed in Table 1.2; original TOCDF FAWB chapter numbers are shown for reference.

The two remaining systems of the 28 originally planned plant system FAWBs are the acid and caustic storage and wash system (ACSWS) (5.20) and the residue handling area (5.24). The ACSWS FAWB at TOCDF no longer is maintained and has not been developed for follow-on sites (see FAWB Note B-3). A FAWB for the residue handling area was not produced due to its lack of automatic control features.

Table 1.1 Programmatic Process FAWBs

FAWB Book #	FAWB Title (TOCDF FAWB Chapter #)
20	Munitions Demilitarization Building HVAC (5.13)
21	Rocket Handling System (5.1)
22	Projectile Handling System (5.2)
23	Mine Handling System (5.3)
24	Bulk Container Handling System (5.4)
25	Deactivation Furnace System (DFS) (5.5)
26	Liquid Incinerator (LIC) System (5.6)
27	Metal Parts Furnace (MPF) System (5.7)
28[1]	DFS, LIC, and MPF Pollution Abatement System and PAS Filter System (5.9)
29	Brine Reduction Area (BRA) and BRA PAS (5.23)
30	Container Handling Building (5.11)
31	Automatic Continuous Air Monitoring System (5.25)
32	Treaty Compliance Equipment (Not included in original FAWB)
33[2]	DUN System and DUN PAS (5.8 & 5.10)

[1] Per discussions held during the comment resolution matrix meeting for the PAS FAWB on 11-10-98, the draft programmatic process FAWBs for the PAS and PFS were combined into a single PAS/PFS FAWB, Book 28 (See FAWB Note B-2).

[2] As directed at the FAWB teleconference on 9-10-98, a programmatic process FAWB for the DUN/DUN PAS is not being developed (See FAWB Note B-1).

Table 1.2 Site-Specific Utility FAWBs

FAWB Book #	FAWB Title (TOCDF FAWB Chapter #)
1	Fuel Gas System (5.15)
2	Hydraulic Power Unit and Distribution System (5.14)
3	Bulk Chemical Storage System (5.19)
4	Compressed Air Systems (5.16)
5	Steam Generation System (5.22)
6	Door Monitoring System (5.26)
7	Primary Cooling System (5.28)
8	Electrical Distribution & Emergency Power System (5.12)
9	Not used; formerly HVAC
10	Water Systems (5.17)
11	Central Decon Supply System (5.21)
12	Toxic Storage and Handling Systems (5.18)
13	Not used; formerly acid and caustic storage and wash system
14	Fire Detection and Protection System (5.27)
15 - 19	Not assigned; reserved for future use

1.4 PROGRAMMATIC PROCESS FAWB PURPOSE

The programmatic process FAWBs serve as a repository for all control information for the automated aspects of the baseline technology demilitarization process systems. They serve as one of the source documents for PLC control system and computer system programming, operator training, and facility operation. These FAWBs also serve as programmatic reference documents that define how the process systems operate and capture the differences between facility operational configurations. Each programmatic process FAWB contains a subsection that defines the system boundaries and identifies the interfaces with other plant process and utility systems.

Programmatic process FAWBs are living documents, subject to configuration control under the CSD project Participant Quality Assurance Plan. They are meant to be continuously updated with user input whenever system modifications are made, or as needed to enhance the information presented. Programmatic process FAWB revisions are implemented as outlined in Section 1.6. The process by which the SCT maintains the programmatic process FAWBs and the roles and responsibilities of each organization affiliated with the CSD project are described in detail in the Programmatic Process FAWB Maintenance Plan.

Programmatic Process FAWB Limitations

Even though the FAWBs contain detailed descriptions of the configuration and control for each process system, they are not all-inclusive. Every effort is made to include the

level of detail necessary to fully describe the specific operating configuration for each process system. Each process FAWB includes supporting references to direct the user to relevant programmatic and site-specific documentation (e.g., standing operating procedures, drawings).

Because of the revision cycle time, there will be a slight lag time between recent changes and their reflection in the FAWB. Maintenance of the FAWBs will be done semiannually, or more frequently if needed, to reflect significant modifications.

The FAWB maintenance program relies heavily on input from each baseline technology demilitarization site. Timely and accurate input ensures that the FAWBs reflect the current configuration at each of the sites. All information received will be thoroughly reviewed to ensure consistent and accurate documentation.

As a programmatic document, the FAWBs describe the configuration and operation of four separate facilities. Care must be taken by the user to ensure that the information extracted from this document reflects the configuration for the facility of interest. Site-specific differences are highlighted in both the text and the appendices to avoid confusion.

1.5 PROGRAMMATIC PROCESS FAWB ORGANIZATION

The process FAWBs document the chemical demilitarization facility operations at ANCDF, PBCDF, TOCDF, and UMCDF. The format and structure of the programmatic process FAWBs differ from the original format prepared by the DSIC, and from the format previously maintained at TOCDF. The information from earlier versions has been retained and updated to reflect lessons learned from the design, construction, systemization, and operation of the demilitarization facilities, including JACADS and the Chemical Agent Munition Disposal System (CAMDS). The overall layout of the programmatic process FAWBs is shown in Table 1-3.

1.6 PROGRAMMATIC PROCESS FAWB REVISIONS

The programmatic process FAWBs are maintained by the SCT to reflect the operational and control system configuration at each CSD site that implements the baseline destruction technology. Each programmatic process FAWB will be reviewed and revised, as required, on a semiannual basis. Individual process FAWBs can be revised more frequently, if needed, to reflect significant configuration changes. Programmatic process FAWB modifications can be generated by the following:

- Engineering change proposals at any of the CSD sites
- CSD project programmatic lessons learned
- Operational modifications that do not involve configuration changes
- Programmatic changes
- Need for greater detail or clarification

The programmatic process FAWB maintenance plan identifies the organizations that participate in the FAWB maintenance program and the responsibilities of each to supply information that could result in revisions to the FAWB. All organizations are represented

on the FAWB Evolvement/Evaluation Team (FEET), and are involved with review of each FAWB revision to ensure that the site configuration and operating strategy is current.

Table 1.3 Organization of the Programmatic Process FAWBs

Section	Title	Contents
1	Introduction	General FAWB background, organization, and revision method
2	System Overview	Purpose of the system; operational and process design basis summary; system boundaries and interfaces
3	Process Description	Description of subsystems; control sequences
4	Component Summary	Tables listing parameters for primary components; power source listings
App. A	Acronyms and Abbreviations	
App. B	FAWB Notes	Notes that provide additional detail or background information
App. C	Alarm and Interlock Matrices	Programmatic matrices or matrices for each site
App. D	PLC Automatic Control Sequences	Automatic logic contained in the PLC code; burner management system automatic controls; sequencer logic for demil systems
App. E	Operator Screens	Advisor PC screens for each site
App. F	Instrument Ranges	Tables showing instrument ranges and setpoints
App. G	Intercontroller Communications	Tables listing the digital intercontroller inputs/outputs (DICIs/DICOs)
App. H	References	Listing of reference documents, including drawings, used to prepare and maintain the FAWB

SECTION 2
SYSTEM OVERVIEW

2.1 PURPOSE AND FUNCTION

The wet pollution abatement system (PAS) is designed to meet environmental requirements for the control of gaseous emissions from the deactivation furnace system (DFS), liquid incinerator (LIC) system, and metal parts furnace (MPF). The PAS filter system (PFS) has been incorporated into the PAS for the DFS, LIC and MPF at all sites except TOCDF as further protection against agent and trace organic emissions to areas outside of engineering control (see FAWB Note B-4). Each furnace system has a dedicated PAS/PFS[1] that discharges to a common stack.

The PAS equipment at all sites includes a quench tower, venturi scrubber, packed-bed scrubber tower and mist eliminator vessel to cool and remove acid gases, particles, NO_2 and SO_2 from the exhaust gas prior to discharge to the atmosphere. These PAS components are designed to:

- cool the exhaust gases to saturation temperature,
- remove priority pollutants such as NO_2 and SO_2,
- neutralize acid gases such as HCl, HF and H_3PO_4, and
- remove particles such as fiberglass, ash, and metal oxide.

The PFS equipment, located at all sites except TOCDF, includes a PFS gas reheater, PFS carbon filter units, and clean liquor air coolers. PFS gas reheater and PFS carbon filter units are located between the mist eliminators and the furnace exhaust blowers; the air coolers are located in the scrubber tower's clean liquor recirculation loops. PFS equipment removes trace levels of organic compounds and particles from the exhaust gas. This ensures that, in the unlikely event of a chemical agent release through the PAS, the agent is adsorbed by the carbon filters and not discharged to the atmosphere.

2.2 OPERATIONAL SUMMARY

The PAS/PFS operates automatically in conjunction with the associated furnace to remove air pollutants from the exhaust gas emissions. High-temperature exhaust gas from the furnace enters the PAS and travels upward through the quench tower where caustic brine and water sprays cool the gas to the saturation temperature, *ranging from 172°F to 191°F*. The exhaust gas then travels down through the venturi scrubber. The venturi scrubber mixes the exhaust gas at high velocity with more caustic scrubbing brine, removing most of the

[1] For the purpose of the FAWBs, the PAS and PFS are treated as a single system: the PAS/PFS system. Since TOCDF is not equipped with a PFS (see FAWB Note B-2), the PFS designation for the system does not apply; the TOCDF system is simply the PAS.

particles, acid gases, and other pollutant compounds. The exhaust gas then enters the bottom of the packed-bed scrubber and travels upward through the scrubber tower, where it reacts with a caustic brine solution, clean liquor, to further remove pollutant compounds. At PFS sites, the clean liquor serves as a direct-contact, counterflow heat exchanger that lowers the scrubber tower exhaust gas to 125°F, which condenses water out of the exhaust gas. Clean liquor, heated by the exhaust gas, flows through air coolers and returns to the scrubber tower.

At all sites, the scrubber tower exhaust gas flows through a mist eliminator[2] vessel to remove additional H_3PO_4 mist, solid particles, and other compounds entrained on mist droplets.

Process water supplied to the quench tower brine spray lines and to the scrubber tower clean liquor loop makes up for water lost by evaporation and brine purge. At PFS sites, normal operation requires no makeup to the clean liquor loop since significant water vapor condenses in the scrubber tower packed bed, causing continuous overflow of the chimney trays. Salts produced from the reaction of the caustic brine with the exhaust gas are removed from the system by bleeding brine to the brine reduction area (BRA).

At PFS sites, exhaust gas flows from the mist eliminator vessel to the PFS gas reheater, reducing the relative gas humidity by increasing gas temperature to approximately 160°F. Exhaust gas from the reheater flows to the PFS carbon filter unit(s) to remove any residual trace organic compounds and particles that could be present in the exhaust gas. The exhaust gas is drawn through the PAS and PFS by an adjustable-speed-drive (ASD), two-stage, induced-draft (ID) exhaust blower and discharged to the atmosphere through a common stack.

At TOCDF, exhaust gas is drawn through each furnace PAS by a two-stage, single-speed, ID exhaust blower and discharged to the atmosphere through a common stack.

2.3 PROCESS DESIGN BASIS SUMMARY

The quench tower, venturi scrubber, packed-bed scrubber tower, and mist eliminator components are designed to cool and chemically treat the exhaust gas from the DFS, MPF, and LIC furnace systems at all four sites. The PAS component removal efficiencies at UMCDF are shown in Table 2.1. Removal efficiencies are similar at all four sites.

At PFS sites, the PFS clean liquor air coolers, gas reheater unit and carbon filter unit components are designed to condition and filter the exhaust gas to remove residual particles and organic compounds. The UMCDF process design parameters for the exhaust gas and the PFS components are listed in Table 2.2. Process design parameters are similar at ANCDF and PBCDF.

[2] The TOCDF mist eliminator vessel also is referred to as a demister vessel.

Table 2.1 UMCDF PAS Exhaust Gas Constituent Removal Efficiencies

	Removal Efficiency (%)			
Constituent	Quench Venturi	Packed Scrubber	Mist Eliminator	Overall
SO_2	50	95	-	97.5
H_3PO_4	60	50	96 (99 for LIC)	99.2 (99.8 for LIC)
HCl	98	97	-	99.94
HF	99	98	-	99.98
NO_2	70	95	-	98.5
NO	0	0	-	0
CO_2	0	1.0	-	1.0

Table 2.2 UMCDF PFS Process Design Parameters

Design Parameter	Design Value
Reheater inlet temperature	125ºF
Reheater inlet relative humidity	100%
Reheater outlet temperature	160ºF
Carbon filter inlet temperature	160ºF
Carbon filter unit capacity	12,000 acfm
Maximum relative humidity of gas entering carbon filter unit	55%
Assumed isentropic efficiency of the exhaust blower	72%
Carbon filter hold-up time	1.5 seconds
Carbon filter efficiency	99.99%

2.4 SYSTEM BOUNDARIES AND INTERFACES

The PAS, supporting components, and instrumentation at all sites consist primarily of the government-furnished equipment (GFE). The PFS consists of GFE and equipment procured by the systems contractor (SC). SC-procured PFS equipment includes the clean liquor pumps, air cooler empty-out pump, gas reheaters, carbon filter units, and supporting components. The PFS air coolers and instrumentation are GFE.

For the purpose of the FAWB, the PAS area sump and the recovered water system are considered to be within the PAS/PFS system boundaries. These ancillary systems are described in the PAS/PFS FAWB.

The primary interfaces for the PAS/PFS include:

(1) Feed: High-temperature exhaust gases, approximately 2,000°F from the MPF and LIC and *2,000°F or higher* from the DFS, are drawn into the PAS/PFS (see FAWB Note B-5).

(2) Bulk Chemical Storage: Eighteen percent sodium hydroxide (18% NaOH) is supplied to the quench brine recirculation loops and the clean liquor loops for acid gas neutralization.

(3) Utilities: The PAS/PFS requires process water, plant air, instrument air, electrical power, and fuel gas (PFS only).

(4) Brine Reduction Area: Brine from the PAS quench brine recirculation loops, which receive overflow from the clean liquor loops, flows to the brine surge tanks. The PFS interface with the BRA at ANCDF, PBCDF, and UMCDF is through PFS air-cooler empty-out pump PFS-PUMP-142. PFS-PUMP-142 drains the clean liquor medium from the clean liquor air coolers to the BRA when the clean liquor air coolers are not in use.

(5) Steam Generation System: Water from the boiler blowdown is received by the recovered water system and supplied to any of the PAS quench towers (see FAWB Note B-6).

SECTION 3
PROCESS DESCRIPTION

3.1 INTRODUCTION

The deactivation furnace system (DFS), liquid incinerator (LIC), and metal parts furnace (MPF) each use a PAS at all sites that cools and chemically treats furnace exhaust gases, ensuring that emissions to the atmosphere are within acceptable levels. The PAS filter system (PFS) has been incorporated into the PAS for the DFS, LIC and MPF at all sites, except TOCDF, as further protection against agent and trace organic emissions to areas outside of engineering control (see FAWB Note B-4). The PFS equipment includes a PFS gas reheater, PFS carbon filter units, and clean liquor air coolers. The PFS gas reheater and PFS carbon filter units are located between the mist eliminators and the furnace exhaust blowers; the air coolers are located in the scrubber tower's clean liquor recirculation loops. Each PAS/PFS consists of the following principal equipment:

- Quench Tower
- Venturi Scrubber
- Packed-bed Scrubber Tower
- Clean Liquor Air Coolers[1]
- Mist Eliminator Vessel[2]
- PFS Gas Reheater[1]
- PFS Carbon Filter Unit(s)[1]
- Exhaust Blower

3.2 DESCRIPTION OF SUBSYSTEMS

3.2.1 Quench Tower

The first PAS step involves treatment of furnace exhaust gases in a counter-flow quench tower. The quench tower is a Hastelloy vertical vessel that contains multiple banks of spray nozzles. High temperature furnace exhaust gases, approximately 2,000°F for the MPF and LIC, *2,000°F or higher* for the DFS (see FAWB Note B-5), enter near the bottom of the quench tower through a refractory-lined inlet nozzle. The exhaust gases flow up through the caustic mist created by the sprays and are cooled to their adiabatic saturation temperature as water evaporates. Caustic spray inside the quench tower reacts with and neutralizes acids

[1] The Clean Liquor Air Coolers, *PFS Gas Reheater, and PFS Carbon Filter Unit(s) are* PFS equipment; TOCDF has no PFS.

[2] The TOCDF mist eliminator vessel, also known as the demister vessel, is referenced in programmatic FAWB discussions as the mist eliminator vessel.

in the exhaust gases. A process water line attached to a dedicated set of quench nozzles provides emergency water quench in the event of a high temperature condition. Exhaust gases exit the top of the quench tower and liquid brine falls to the bottom of the quench tower, where it drains by gravity to the bottom of the scrubber tower sump.

Grating has been added at the bottom of the quench towers to prevent salts and other solids from clogging the drain line to the scrubber tower sump (see FAWB Note B-15).

A quench brine pump supplies brine from the scrubber tower sump to the quench tower spray nozzles (see Section 3.2.3). The spray nozzle banks are configured in three levels in the quench tower. During normal operation, the lower two banks of spray nozzles are used for brine spray. The top level is used for emergency water quench. Each level of spray nozzles in the LIC and MPF quench towers is distributed in two branches. Each level of spray nozzles in the DFS quench tower is distributed in three branches.

The spray nozzle bank configuration for each of the quench towers at each site is listed in Table 3.1.

Table 3.1 Quench Tower Spray Bank Nozzle Configuration (Normal/Emergency)

	ANCDF	PBCDF	TOCDF	UMCDF
DFS	16/7	16/7	14/7	16/7
LIC[a]	8[b]/4	10/4	8/4	8[b]/4
MPF	8[b]/4	9/4	8/4	8/4

[a] TOCDF & UMCDF quench tower nozzle configuration for LIC1 & LIC2 are identical.
[b] Four each of two nozzle sizes.

A magnetic flowmeter, flow controller, and a flow control valve maintain the brine flow to the quench tower at a constant rate to maximize nozzle performance. *Current TOCDF operational setpoints, and follow-on site maximum* flow rates to each of the furnace quench towers are shown in Table 3.2. *Follow-on site actual flow control setpoints entered by the operator will vary based on the campaign being processed.*

Table 3.2 *Maximum* Quench Tower Brine Flow Rates (gpm)

	ANCDF	PBCDF	TOCDF[a]	UMCDF
DFS	302	281	250	302
LIC	114	117	100	115
MPF	112	103	120	137

[a] *TOCDF flow rates are current flow control setpoints entered by the operator.*

Process water supplied to the quench brine loop, *down*stream of the brine flow control valve, makes up for water lost by evaporation and brine purge. The makeup water flow to the quench towers is controlled by a level-control valve that takes its signal from the level in the scrubber tower sump. The scrubber tower sump level controller setpoint for all furnace

PAS scrubber towers is approximately 68 in. wc.[3] at PFS sites, and 35 in. wc. at TOCDF. As the level in the scrubber tower sump falls, the level control valve opens to allow more makeup water flow to the quench nozzles. Flow from the quench brine pump decreases as the makeup water flow increases. The quench flow controller modulates the brine flow control valve to maintain a constant flow to the quench nozzles. The increase in makeup water allows the brine level in the scrubber sump to rise. Conversely, as the level rises in the scrubber tower sump, the level control valve closes to reduce the amount of makeup water added. Flow from the quench brine pump increases as the makeup water decreases. The quench flow controller modulates the brine flow control valve to maintain a constant flow to the quench nozzles.

The process water header supplies makeup water to the quench brine loop. Water from the recovered water system also can be used to supply makeup water to the PAS quench brine loops (see Section 3.2.10).

Since the amount of liquid brine recycled through the quench system is significantly greater than the amount evaporated by the exhaust gases to achieve saturation temperature, there are negligible fluctuations in the temperature of gases leaving the quench tower. However, should exhaust gas rise above the high-high temperature setpoint *(see Appendix C for setpoints)*, a block valve automatically opens to allow process water flow through the highest bank of nozzles as an emergency quench (see FAWB Note B-7). The programmable logic controller (PLC) tests this emergency system once every 24 hours by opening the block valve and verifying flow by means of a flow switch (see FAWB Note B-8). Once flow is verified, the PDAR records “flow normal” and the block valve closes. If flow is not verified after 15 seconds, the PLC closes the valve and alarms. The test of the emergency quench water occurs only if the furnace is operating.

A high-high-high temperature switch initiates a total furnace shutdown when the quench tower exhaust temperature reaches 250°F. Response time for the temperature switch must be rapid to prevent downstream equipment damage from high temperatures (see FAWB Note B-7).

3.2.2 Venturi Scrubber

The venturi scrubber removes acid gases and particulate matter from the quenched furnace exhaust, with a 99% removal efficiency for particles 0.5 micron or larger. The venturi scrubber is a Hastelloy, variable-plug throat venturi, with multiple radial and tangential caustic brine spray nozzles at its inlet. Exhaust gases cooled in the quench tower flow down through the venturi scrubber where they encounter the radial and tangential sprays of caustic brine. The caustic brine droplets react to neutralize acid gases, and the moisture entraps fine solid particles. The exhaust gas and liquid streams combine and are accelerated to high velocity in the decreasing area of the throat of the venturi. The high velocity, combined with a 90-degree change in direction, causes the removal of particles from the gas stream.

A dedicated branch of the quench brine pump discharge supplies caustic brine to the venturi scrubber nozzles. A magnetic flowmeter, flow controller, and control valve maintain the

[3] Scrubber tower sump levels at follow-on sites may vary due to site-specific operating conditions.

brine flow to the venturi at a constant rate. *Current TOCDF operational setpoints, and follow-on site normal* brine flow rates[4] to each venturi scrubber are shown in Table 3.3. *Follow-on site actual flow control setpoints entered by the operator will vary based on the campaign being processed.*

The removal efficiency is determined by the velocity of the mixture, which is dependent on the differential pressure across the venturi. The differential pressure across the venturi is maintained at a constant value by means of a differential pressure transmitter, controller, and actuator that modulates the throat of the venturi. The CON operator (CRO) enters a controller setpoint, based on process requirements and operating experience. At TOCDF, the differential pressure setpoint is 30 in. wc. for the MPF and DFS PAS venturi, and 45 in. wc. for the LIC venturi. At PFS sites, the exhaust blowers are sized for 40 in. wc. across each venturi.

Table 3.3 Venturi Scrubber Brine Flow Rates[4] (gpm)

	ANCDF	PBCDF	TOCDF[a]	UMCDF
DFS	*325*	*325*	325	*325*
LIC	*135*	*TBD*[b]	110	*135*
MPF	*145*	*145*	110	*160*

[a] *TOCDF flow rates are current flow control setpoints entered by the operator.*

[b] *Unique pump head calculations are required to determine the PBCDF LIC venturi scrubber brine flow rate because it uses different flow nozzles than ANCDF and UMCDF (Ref: RFI-C-ANCDF-003R1).*

The venturi scrubber outlet connects to the inlet nozzle of the scrubber tower, enabling the gas and liquid mixture to flow to the scrubber tower sump with minimal friction loss. The cyclonic action caused by the tangential inlet removes additional particles and aids acid gas neutralization.

3.2.3 Quench Brine

A quench brine pump constantly recirculates quench brine from the scrubber tower sump to the lower two sets of spray bank nozzles in the quench tower and to the radial and tangential spray nozzles at the entrance to the venturi scrubber. The system uses two pumps; the CRO designates one of the pumps as primary. If the primary pump malfunctions or if the discharge pressure decreases below the low pressure setpoint, the standby pump automatically starts and the primary pump stops (see Appendix C for setpoints). Subsequent malfunction of the standby pump or low pump discharge pressure alarms at the CON. A decrease in quench brine pump discharge pressure below the low-low pressure setpoint initiates a stop feed and alarms in the CON.

The process water system circulates seal water to the quench brine pumps to prevent caustic brine leakage. Loss of seal water flow to the primary pump causes it to stop. *Shutdown of the primary pump will cause a device malfunction, leading to switchover to the standby pump* (see FAWB Note B-9). Subsequent loss of seal water flow to the standby pump activates an alarm only.

---

[4] *Follow-on site normal flow rates are specified in RFI C-ANCDF-003R1.*

Since quench tower and venturi scrubber exhaust gases contain acids, the brine is maintained at a pH above 7.0, with a controller setpoint of 8.0. The pH is maintained by the addition of eighteen percent sodium hydroxide (18% NaOH) to the quench brine loop to replace the caustic used for the neutralization of the acid exhaust gases. The caustic is added downstream of the venturi scrubber brine flow control valve. The pH of the brine controls the flow rate of the caustic. Parallel redundant sensors in a bleed line from the quench brine pump discharge measure the pH.

At TOCDF, isolation valves for both pH probes remain open during PAS operations, keeping the probes submerged at all times. The PLC program designates one probe as the active probe. A timer automatically switches which probe is active every hour. The operator can, however, hold a pH analyzer online while the other analyzer is taken out of service for calibration. *At follow-on sites, a timer automatically cycles the solenoid isolation valves for the two pH meters every hour so that one probe is online measuring the brine pH and the other probe is purged with process water (see FAWB Note B-16).*

At all sites, the signal from the active probe goes to a controller that modulates a valve to control caustic flow and maintain the brine pH at the setpoint. Although the caustic is first added at the venturi, it quickly ends up in the scrubber sump. So, the overall effect of the caustic addition is control of the scrubber sump pH. An alternative caustic line with a normally closed manual block valve allows the caustic to be added directly to the scrubber sump. If both quench brine pumps stop, the PLC closes the caustic control valve to prevent the uncontrolled addition of caustic to the PAS.

The reaction of the caustic brine with the acid gases also results in a buildup of dissolved salt byproducts in the recycle brine, which acts to increase the brine density in the scrubber tower sump. To compensate for this buildup, a bleed line from the quench brine pump discharge sends the high density brine to the brine reduction area (BRA). This stream is controlled by the density of the brine, which is measured at another bleed stream from the quench brine pump discharge. A density meter sends a signal to a density controller so that the amount of flow to the BRA increases as the density of the brine increases, and vice versa. Increased flow to the BRA lowers the sump level, which is compensated by an addition of process water, thus, lowering the density of the brine. At PFS sites, if the level in the scrubber tower sump reaches the high-high level, the signal from the density controller is overridden and the valve on the bleed line to the BRA goes to its fully open position, regardless of the brine density. The specific gravity of the purge brine solution is maintained at 1.09 for GB[5] operations, and at 1.15 for all other agents.

3.2.4 Packed-Bed Scrubber Tower

The packed-bed scrubber tower is a counter-current system that scrubs the remaining acids out of the exhaust gas stream. At PFS sites, the packed bed also serves as a counter-current heat exchanger that cools the up-flowing gases in the packed bed (see Sections 3.2.4.1 and 3.2.6.1). The scrubber tower is a vertical Hastelloy vessel with internals that include a chimney tray, packed bed, distribution weir, and mist eliminator pad. The two-phase stream from the venturi scrubber enters the scrubber tower through a

[5] The purge brine solution specific gravity design value is 1.08 @ 175°F for GB at follow-on sites.

tangential (rectangular) nozzle near the bottom of the tower. The gas portion of the stream flows up through the tower, while the entrained liquid droplets fall to the bottom or sides of the tower. Exhaust gases exit at the top of the scrubber tower.

The exhaust gases in the scrubber tower flow upward through a chimney tray and the packed bed. Clean liquor is sprayed over the top of the packed bed and distributed over the packing by distribution trays. The packing consists of pall rings at TOCDF, and Intalox saddles at other sites. The clean liquor flows down through the packing and falls into the chimney tray. In the packing, the exhaust gas is exposed to caustic from the clean liquor solution. The packed bed provides a large surface area for the exhaust gas to come in contact with the clean liquor. The packed bed also forces the exhaust gas to take a tortuous path to provide good mixing of the exhaust gas and the clean liquor. The clean liquor drains out of the packed bed, collects in the chimney tray, and is recirculated to the top of the packed bed. The clean liquor circulation loop is described in Section 3.2.4.1.

The purpose of the chimney tray and separate clean liquor loop is to maintain separation of the brine liquid that recirculates to the quench tower and venturi scrubber from the clean liquor that is sprayed on the packed bed. The brine solution from the quench tower and venturi scrubber contains suspended solids, which could cause plugging in the packed bed.

A mist eliminator pad at the top of the scrubber tower strips excess moisture from the exhaust gas exiting the packed bed. The differential pressure across the pad normally is less than 1 in. wc. During normal operation, moisture or particle buildup on the pad causes the differential pressure across the pad to increase. A water spray line, supplied by process water, is used to rinse the mist eliminator pad, reducing the differential pressure across the pad. When the furnace is operating, the PLC periodically opens the spray line valve to clean the pad automatically. An operator also can initiate the spray from the CON, provided there is no high or high-high level in the scrubber tower sump. For the MPF and LIC PASs, the spray cycle is 1 minute for every 8 hours of furnace operation. For the DFS PAS, the spray cycle is 5 minutes for every 8 hours of furnace operation. If flow is not verified by a flow switch, an alarm sounds in the CON. If the emergency quench spray starts or is in progress, a software interlock interrupts or inhibits the mist eliminator pad spray wash. This prevents the sudden, uncontrolled addition of too much water to the scrubber tower.

If a high-high-*high* level alarm *(high-high alarm at TOCDF)* occurs in the scrubber sump, the PLC automatically shuts off the mist eliminator water return pump, and closes the spray pad wash valve *and process water flush line valves for the pH probes. In addition, if the controllers for the following valves are in AUTO, the alarm drives the valves closed:* clean liquor caustic addition valve, clean liquor water addition valve, venturi caustic addition valve, and quench tower water addition valve. All of these potentially add liquid to the scrubber sump. The only source of liquid not affected by the sump level high-high-*high (high-high level at TOCDF)* is the emergency spray in the quench tower. Additionally, the high-high-*high* level switch *(high-high level switch at TOCDF)* causes the PLC to stop feed and shut down the furnace.

3.2.4.1 Clean Liquor

At PFS sites, the configuration, sizing, and operation of some equipment and instrumentation associated with the clean liquor recirculation loops changes significantly. At PFS sites, the clean liquor is used not only as a scrubbing medium in the packed-bed

section of the scrubber tower, but also as a direct-contact, counterflow heat exchanger that lowers the scrubber tower exhaust gas to 125°F and condenses out moisture.

At PFS sites, the clean liquor flows through the air coolers and returns, cooled, to the scrubber tower. The PFS clean liquor air coolers are described in Section 3.2.6.1. At TOCDF, a pump continuously recirculates clean liquor used in the scrubber tower from the chimney tray to the top of the packed bed, using two pumps that operate in a primary/standby manner identical to the quench brine pumps. Both the clean liquor and quench brine pump systems utilize seal water to prevent caustic leakage (see FAWB Note B-9). At PFS sites, the clean liquor pumps were given new PFS system tag numbers. The tag numbers and design parameters for all clean liquor pumps are shown in Section 4.1.7.2 in Tables 4.32 through 4.34.

At all sites, a magnetic flowmeter, flow controller, and control valve maintain the clean liquor flow to the packed bed at a constant rate that is set by the operator to optimize the gas-to-liquid ratio. *Current TOCDF operational setpoints, and follow-on site maximum* clean liquor flow rates to each scrubber tower are shown in Table 3.4. *Follow-on site actual flow control setpoints entered by the operator will vary based on the campaign being processed.*

Table 3.4 *Maximum* Scrubber Tower Clean Liquor Flow Rates (gpm)

	ANCDF	PBCDF	TOCDF[a]	UMCDF
DFS	2185	2087	1000	2182
LIC	768	788	500	778
MPF	799	797	500	799

[a] *TOCDF flow rates are current flow control setpoints entered by the operator.*

The flow can be supplemented by process water, which ties in at a point upstream of the flowmeter. The water flow is controlled by a level control valve that takes its signal from the level in the chimney tray. At TOCDF, the chimney tray level controller setpoint is 55 in. wc. for all scrubber towers. At PFS sites, exhaust gas cooling in the packed-bed section of the scrubber tower results in significant condensation of water vapor in the packed bed and continuous overflow of the chimney trays. As a result, the level control valve for makeup water remains closed. Therefore, density control for clean liquor is not needed at PFS sites, and is not provided in the design.

At TOCDF, the scrubber tower design without cooling of the exhaust gas in the packed bed results in a salt buildup and an increase in clean liquor density from the acid gas caustic reaction. To compensate for the density increase, a density controller, linked to a density meter on the discharge of the clean liquor pump, overrides the level controller to increase process water flow to the packed bed. The additional water dilutes the clean liquor, reducing the density. With the increased makeup water flow, the liquid level in the chimney tray rises until it overflows to the scrubber tower sump. Some salts are carried over into the scrubber tower sump and, thus, removed from the clean liquor. If the clean liquor pumps are not operating, the density controller is driven to zero to close the process water valve to prevent the uncontrolled addition of water to the scrubber. The specific gravity of the clean liquor solution is maintained at 1.09 for GB operations, and at 1.15 for all other agents.

At PFS sites, two clean liquor pH control modes are available: (1) pH control (same mode as TOCDF), and (2) flow control. When in the first mode, clean liquor pH is controlled in a manner identical to TOCDF; when in the flow control mode, an operator enters a setpoint in a flow controller and a control valve modulates to provide a constant flow of caustic. *The clean liquor solution specific gravity design limit is 1.14 for GB and 1.15 for other agents. The specific gravity will normally be much lower (about 1.0) because a large amount of water condensation will occur in the scrubber tower due to cooling of the exhaust gas.*

At TOCDF, the clean liquor pH is maintained in a manner similar to the method used to control quench brine pH. The pH is measured by pair of pH meters in a bleed line off the clean liquor pump discharge. The pH meters operate in an alternating manner *(see FAWB Note B-16)*. The pH meters send a signal to a controller that varies the caustic flow to maintain the clean liquor pH at the setpoint. Caustic is added to the clean liquor pump discharge line downstream of the clean liquor flow control valve. If neither clean liquor pump is running, the PLC drives the caustic control valve closed to prevent the uncontrolled addition of caustic to the scrubber.

3.2.5 Mist Eliminator Vessel

The mist eliminator vessel is a fiberglass, flat-bottom, domed-top vessel with multiple, vertically mounted candle filter elements. There are six mist eliminator vessels at TOCDF and UMCDF, and five at ANCDF and PBCDF; one for each furnace plus one LIC spare and one MPF/DFS spare. The candle filters remove orthophosphoric acid (H_3PO_4), metal oxides, and other entrained solid particles and liquids from the exhaust gas stream. Entrained liquids form droplets on the candles; gravity moves these droplets to the sump. As they move to the sump, these droplets dissolve water-soluble particles that are embedded in the candle, and they also are carried to the sump. Nonsoluble particles on the filter also can be suspended by the flowing liquid and carried to the sump. Nonsoluble particles that become imbedded in the filter material do not wash down; therefore, candle filter elements eventually must be cleaned or replaced.

At TOCDF, the acid wash system piping has been abandoned in place (see FAWB Note B-10), and no means exists for remotely cleaning candle filter elements. At PBCDF, the candle filter elements can be cleaned remotely by an operator opening a solenoid valve on a process water line to each mist eliminator vessel. At ANCDF and UMCDF, mist eliminator vessel candle filters can be cleaned with process water and 18% caustic remotely, using mist eliminator recirculation pumps PAS-PUMP-131 and -132. At all sites, a sensor measures the differential pressure across the candle filter elements and generates an alarm on high differential pressure, alerting the operator to clean the filter elements. If the filter elements are not cleaned or replaced and the differential pressure increases to the high-high alarm setpoint, the PLC generates a stop feed for the associated furnace.

Since the candle filter elements in the mist eliminator vessels require periodic cleaning or replacement, there are two spare mist eliminator vessels at each of the sites to allow for manual switchover from the normally-aligned mist eliminator vessel to a spare. At all sites, one of the spares can be aligned with either the MPF PAS or DFS PAS. At TOCDF and UMCDF, which each have two LIC furnace systems, the second spare mist eliminator vessel can be aligned with either LIC PAS. At ANCDF and PBCDF, which each have only

a single LIC furnace, the second spare is dedicated to the LIC PAS. All mist eliminator vessels also have bypass capability. To bypass the vessels in the LIC(s) and MPF PASs, realign the manually operated dampers. In the DFS PAS, realignment can be done remotely.

A mist eliminator water return pump pumps the liquid collected in the mist eliminator vessel to the scrubber tower sump (see FAWB Note*s* B-11 *and B-17*). The flow rate of the return liquid is controlled by a level controller and control valve to maintain a liquid level in the bottom of the mist eliminator vessel. At TOCDF, a level of 10 in. is maintained in all mist eliminators. *The design control setpoint at follow-on sites is 14 in.* A recycle line with a pressure regulator allows the pump to operate continuously, even if there is no return flow to the scrubber tower sump.

3.2.6 PAS Filter System

The PFS consists of exhaust gas conditioning and carbon filtration equipment. The exhaust gas conditioning equipment first cools the exhaust gas to condense moisture out and then reheats it to reduce the relative humidity so that condensation does not occur within the carbon bed and block the adsorption sites. The carbon filtration equipment removes trace agent or organic vapors from the exhaust gas in the unlikely event that they are present due to furnace upset conditions. The PFSs for each furnace PAS are similar in configuration, although the system sizes vary in accordance with the exhaust gas flow rates. Each PFS consists of two PFS clean liquor pumps, two PFS clean liquor air coolers (DFS has four air coolers), a PFS gas reheater package, and a PFS carbon filter unit (DFS has two carbon filter units). There also is one common spare PFS carbon filter unit, in addition to duct manifolding, that allows another nonoperational PFS carbon filter unit to be used as a spare for the DFS PFS carbon filter units.

3.2.6.1 PFS Clean Liquor Air Coolers

The exhaust gas conditioning section of the PFS requires that the scrubber tower clean liquor be cooled to below 120ºF. The cooled clean liquor, in turn, cools the scrubber tower exhaust gases as they pass, countercurrently, through the packed-bed section of the scrubber tower. Scrubber tower exhaust gas temperature is cooled to 125ºF, resulting in significant condensation of water vapor in the packed bed and continuous overflow of clean liquor from the chimney tray to the scrubber tower sump (see Section 3.2.4.1).

Each furnace PAS has dedicated clean liquor air coolers. The LIC PFSs each have two, PFS-COOL-113A/B for the UMCDF LIC 1 and PBCDF LIC, and PFS-COOL-213A/B for the UMCDF LIC 2 and ANCDF LIC. The MPF PFS has two, PFS-COOL-114A/B, and the DFS PFS has four, PFS-COOL-115A/B/C/D. The air coolers are cross-flow heat exchangers that use forced-draft, adjustable-speed-drive (ASD) fans blowing *from under* the tube bundles that carry the clean liquor.

The air cooler temperature controller on the cooling unit controls the cooling fan speed to maintain the clean liquor temperature exiting the cooling tube bundle. The operator inputs a setpoint (120°F) into the temperature controller and, based on the process variable, the controller outputs a control variable (CV). The temperature controller CV is used as the setpoint for the ASD controller. The ASD ramps the fan to the speed setting input from the PLC. The engineering units displayed and used for control of the ASD

controller are from 0 to 100%, the same as the speed indication on the local control panel face.

The *maximum* operating temperature drop of the clean liquor is approximately 30°F for the DFS, 41°F for the LIC, and 49°F for the MPF (Values are based on UMCDF design; other sites are expected to be similar).

On loss of offsite power (LOOP), restart the air coolers, which are connected to the essential power system. The CV signal for the ASD on the cooling fans is divided in half; the fans run at half speed to limit the load on the emergency diesel generators.

Each cooler is sized to accommodate the largest heat load in the scrubber tower, calculated from the mass and energy balances for the PAS at the summer design dry bulb temperature. Design parameters for the clean liquor air coolers are given in Section 4.1.5.1, in Tables 4.15 through 4.17. Nominal flows are from 860 to 2200 gpm for the DFS, from 430 to 780 gpm for the LIC, and from 400 to 800 gpm for the MPF (Values are based on UMCDF design; other sites are expected to be similar).

The air coolers have pneumatically actuated outlet airflow control louvers designed for manual operation. Under the running condition, the operator selects the louver position, from 0 to 100%, from the Advisor Screen. If the operator places the louvers in AUTO mode and the louvers are in any open position, greater than 3% CV, then they remain at that position regardless of cooling fan operation. If the louvers are in AUTO mode and in the closed position, at less than or equal to 3% CV, then they are driven open, to a 100% CV, whenever the first clean liquor cooler fan of its bay starts after both have been stopped.

Clean liquor differential pressure across the air cooler is monitored and displayed in the CON, with alarms for high and low differential pressure. The nominal operating pressure drop is approximately 13.9 psid for the DFS, 17.4 psid for the LIC, and 17.1 psid for the MPF (Values are based on UMCDF design; other sites are expected to be similar).

The PFS air coolers must be drained when not in use using air cooler empty-out pump PFS-PUMP-142. The pump is controlled locally only. PFS-PUMP-142 services all PFS clean liquor air coolers and pumps the drained fluid to brine surge tank BRA-TANK-101/-102 (BRA-TANK-201/-202 at UMCDF). Failure to keep the brine circulating and the temperature above 95°F, and outside tube temperature at greater than 80°F, results in salt precipitation in the clean liquor, which clogs the system and causes a furnace system shutdown. During turndown, upsets, and shutdown, the tube bundle must be drained if brine temperature cannot be maintained above 95°F. Remove a cooler from service by isolating, flushing, and draining individual tube bundles.

When operating the air cooler empty-out pump, flow switch 114-FSL-133 upstream of the pump alarms (i.e., displays in the CON) and shuts down the pump on low flow. The alarm indicates that the tube bundle is empty of brine solution or a malfunction exists with the empty-out pump. Flow must be established before the alarm is set.

3.2.6.2 PFS Gas Reheater Unit

After the exhaust gas cools in the scrubber tower and some of the water vapor condenses, it exits the scrubber tower and mist eliminator vessel saturated with water vapor at 100%

relative humidity. To lower the relative humidity of the exhaust gas entering the PFS carbon filter unit(s), reheat it using inline PFS gas reheater unit PFS-BURN-101 for the UMCDF LIC 1 and PBCDF LIC, PFS-BURN-201 for the UMCDF LIC 2 and ANCDF LIC, PFS-BURN-*102* for the MPF, and PFS-BURN-*103* for the DFS.

The PFS gas reheater consists of a fuel gas burner with combustion air blower, burner assembly, and a burner management panel. Thermocouples in the exhaust duct, downstream of the burner, monitor the exhaust temperature and maintain it at the setpoint, approximately 160°F, by modulating both the fuel gas and combustion air control valves. The exhaust gas temperature is raised high enough to ensure that relative exhaust gas humidity is below 55%.

The PFS site gas reheater blowers are as follows: PFS-BLOW-101 for the UMCDF LIC 1 and PBCDF LIC, PFS-BLOW-201 for the UMCDF LIC 2 and ANCDF LIC, PFS-BLOW-102 for the MPF, and PFS-BLOW-103 for the DFS. The PFS gas reheater blower supplies combustion air from the outside, through an inlet duct, to the burner assembly. The PFS gas reheater blower design parameters are shown in Tables 4.22 through 4.24. The PLC maintains the desired combustion airflow by modulating a flow control valve in the duct.

The fuel gas distribution system supplies fuel at 35 psig header pressure, and reduces pressure to supply to the main and pilot fuel gas lines.

A flame scanner unit, hardwired to various safety functions through the burner management system (BMS), supervises the burner. A flame safety shutdown system (FSSS) is located in the burner management panel. The only control signals from the reheater unit BMS going back to the PLC inputs are signals that indicate the LOCAL/REMOTE mode, BURNER ON, PURGING, and BURNER FAIL. The HIGH FIRE/LOW FIRE sequence and LIGHT-OFF are handled by the reheater unit BMS. If the reheater unit does not successfully complete the sequence, the reheater unit generates a Burner Fail alarm, and the PLC initiates a stop feed to the furnace. Fuel flow is controlled by modulating the fuel gas control valve, based on a signal from the PLC temperature controller. Combustion air is controlled by modulating the combustion air flow control valve. *The reheater unit internally controls the combustion air control valve by sending a proportionally corrected signal to the valve based on the 4 to 20 mA temperature controller signal sent to the fuel gas control valve.* Once the reheater unit is started, a BURNER ON signal is sent to the PLC.

The reheater unit has a local emergency stop that signals the PLC by sending a BURNER FAIL signal.

A high temperature switch provides an alarm, with no action, to alert CON operators when the exhaust gas temperature downstream of the burner exceeds a preset high temperature limit. An independent high-high temperature switch, set at *176°F*, locks out the burner and sends a BURNER FAIL signal to the PLC, which initiates a stop feed for the associated furnace.

The operating setpoint for the gas reheater temperature controller is set in the PLC. The CON operator inputs a setpoint of 160º F for normal operation. The PLC temperature

controller output connects directly to the air/fuel ratio combustion controller in the reheater unit. This internal controller maintains proper air to fuel ratio[6].

3.2.6.3 PFS Carbon Filter Unit

The PFS carbon filter units receive conditioned exhaust gas from the PFS gas reheater exhaust at approximately 160°F, with a relative humidity of less than 55%. The carbon filter units remove trace agent or organic vapors from the exhaust gas in the unlikely event that they are present due to furnace upset conditions.

There are six PFS carbon filter units at UMCDF and five at ANCDF and PBCDF as follows: PFS-FILT-109 for the UMCDF LIC 1 and PBCDF LIC, PFS-FILT-209 for the UMCDF LIC 2 and ANCDF LIC, PFS-FILT-110 for the MPF, PFS-FILT-111/-112 for the DFS, and spare PFS-FILT-113. Each PFS carbon filter unit consists of a minimum of *seven* banks of filters. First is a bank of prefilters, followed by a bank of HEPA filters. Following the prefilters and HEPA filters, the exhaust gas is drawn through *the* carbon filters*, which* consists of *four* activated-carbon filter banks *in parallel*, with each bank having two beds in series. After the carbon filter banks, exhaust gas flows through another bank of HEPA filters, before exiting the filter unit.

The PFS carbon filter unit housing is designed in accordance with ASME Boiler and Pressure Vessel CODE Section VIII. The particulate filter housing, carbon adsorption assemblies, and all other components exposed to the exhaust gas are constructed using Duplex 2205 stainless steel, with continuous, seal-welded pressure boundary joint corners and seams that create a leaktight and airtight assembly to the atmosphere and between compartments. Exhaust gases enter and exit the filter unit through 26-inch, flanged, pneumatically operated, butterfly isolation dampers with position indicators. The dampers are rated for zero leakage at 141 in. wc.

The prefilter bank consists of twelve prefilter modules rated at 1,000 cfm each, for a total of 12,000 acfm. The prefilter modules are 2 feet square by *5.875 in.* deep and are arranged in a 4-by-3 array. The prefilter frames are constructed using Duplex 2205 stainless steel. The prefilters are classified as Type III, the highest ranking of a prefilter other than HEPA filters. They use a pleated filter paper medium with a particle control efficiency rating of from 80 to 85% at the rated flow, when tested in according with ASHRAE 52.1. Generally, type III prefilters are capable of removing more than 75% of particles larger than 1 micron in size. Prefilters reduce the load and extend the life of the more expensive HEPA filters, thereby reducing incinerator system maintenance repairs and down time.

The HEPA filter bank consists of twelve HEPA filter modules rated at 1,000 cfm each, for a total of 12,000 acfm. HEPA filter modules are 2 feet square by 11.5-in. deep and are arranged in a 4-by-3 array. The HEPA filters have a 99% particle control efficiency for particles larger than 0.3 microns in size. They are constructed by pleating a continuous web of filter paper medium over corrugated separators that add strength and form exhaust gas passages between the pleats.

---

[6] The DSIC simulated 20% excess air in mass and energy balances. The actual value will be determined by the vendor.

Each PFS carbon filter unit contains *four* banks of carbon filters in *parallel*. Each bank contains two 24-inch-deep carbon beds in series. The filter medium is composed of very fine fibers, generally about 0.15 inches thick. All PFS sites use a depot area air monitoring system (DAAMS) to detect organic compound breakthrough of the first bed. PBCDF also uses an automatic continuous air-monitoring system (ACAMS) unit. *UMCDF is equipped with carbon sample chambers piped across the second filter banks which will be periodically removed for lab tests to detect indications of agent breaking through the first bank.* The carbon filter design is based on a 1.5-second residence time, with a superficial base velocity of 56 ft/min, a volumetric flow rate of 12,000 acfm, and a normal operating temperature of 160°F. The carbon bed mechanical efficiency is specified at 99.99%. The maximum amount of organic chemical agent compounds that a carbon filter can adsorb remains undetermined. However, studies indicate that the carbon adsorption efficiency of GB at 160°F is approximately 0.24 g/g carbon. The limit of quantification (LOQ) for an ACAMS typically is 0.2 hazard level of the specific agent being monitored, *which, when monitoring at the TWA level, is* 0.00006 mg/m^3 for GB or VX, and 0.006 mg/m^3 for HD. The filters are expected to perform below the LOQ; therefore, the DAAMS verifies the effectiveness of the carbon filters in operation.

The PFS carbon filter units are designed for exhaust gas temperatures up to 180° F, and a relative humidity of up to 55%. A filter unit bypass protects the filters from inlet gas temperatures above 180° F. When the bypass is open, the respective furnace PFS carbon filter unit inlet and outlet dampers close. The bypass damper opens whether or not the damper is in MANUAL or AUTO mode on the Advisor Screen. *If the relative humidity reads 55% as a rolling 1-hour average (ROHA) or 80% instantaneously, a stop feed is generated.*

Each PFS carbon filter unit has six[7] unique differential pressure transmitter readings displayed on the respective filter control screen. These readings allow the operator to monitor the status of the individual filter stages *and the overall filter unit*. A high *differential pressure* alarm for each individual pressure transmitter alerts the operator as a stage approaches the point of requiring a filter change-out. *UMCDF also uses high-high differential pressure alarms for the prefilter and both HEPA filter differential pressure transmitters to alarm the CON and to stop the waste feed automatically.*

3.2.6.4 PFS Carbon Filter Unit Switching

PFS carbon filter unit PFS-FILT-113 is available as a common spare for any of the PFS carbon filter units. The LIC or MPF PFS carbon filter units also can be used as a backup unit for the DFS if those PFS carbon filter units are not in operation. Due to the large exhaust gas flow volume in the DFS process, the DFS PAS has two PFS carbon filter units in parallel.

The logic for switching filters under various PFS configurations is based on a number of general conditions. It is expected that the furnace chamber pressure will fluctuate during the filter switchover process. The waste processing should be momentarily stopped while the switchover is in progress and during the pressure stabilization period immediately

---

[7] *UMCDF design has eight differential pressure transmitters for each filter bank and one differential pressure transmitter for the overall filters.*

following the switchover. Therefore, the CRO must initiate a stop feed before switching filters. This action is not a programmed interlock, and therefore should be covered by each site's standing operating procedures (SOPs). Also, flue gas streams cannot be mixed because proper monitoring of each individual waste stream per RCRA requirements and control between different PLCs would be complicated. To minimize these effects, the feed is stopped and then the new flow path is verified to be open from the valve limit switches before closing the appropriate valves in the old flow path. For a short time, an extra filter is lined up to a particular system and all valves aligning the new filter are open. The filter to be removed from service can then be isolated from the system that it was supporting. Finally, the CRO reestablishes the waste feed. These operating conditions prevent mixing the flow streams between systems before and after the final switchover to the new filter, which is prohibited.

The CRO can initiate an autoswitchover from the normal filter to the spare filter by aligning PFS-FILT-109 to -113 (LIC 1), PFS-FILT-110 to -113 (MPF), or PFS-FILT-209 to -113 (LIC 2). For the DFS, the automatic switchover can be accomplished by aligning PFS-FILT-111 or -112 to -113 or to any other available filter as long as at least one is PFS-FILT-111, -112, or -113. This limitation is necessary because of the differences in duct sizes. The duct at the header leading to filters PFS-FILT-111, -112, and -113 is larger than the duct at the header of filters PFS-FILT-110, -109, and -209 (36 versus 26 in. in diameter). The high flow rate from the DFS might exceed the differential pressure capacity of the exhaust blower if the DFS is aligned to two of the filters connected to the smaller duct.

The automatic switchover is initiated by the CRO and performed through the PLC. The CRO stops the waste process, selects the proper filter combination, and initiates the switchover. The PLC automatically aligns the spare filter to the selected furnace and then isolates the filter being switched out. For instance, to align the spare filter (PFS-FILT-113) automatically to the MPF system, the operator stops the MPF system waste feed, selects the PFS-FILT-110/-113 combination, and initiates the switchover. The PLC opens 114-XV-94, -487, -488, and –95; verifies the open position of those valves; and finally closes 114-XV-438 and -439. The CRO can now resume the waste feed with the minimum flow path available and PFS-FILT-110 out of service.

No valve will be allowed to close if that particular valve provides the minimum flow path required for its associated furnace system. The minimum flow path is met by any one of the following three conditions:

1. *The appropriate numbers of filters are online,*
2. *The bypass valve is open, or*
3. *The furnace system is shut down, which is defined by the closed position of its exhaust blower outlet valve.*

3.2.7 Exhaust Blower

An ID exhaust blower provides the motive force to induce exhaust gas out of a furnace and through the PAS/PFS. The exhaust blower for each furnace consists of two ID fans in series, with an inlet damper located upstream of the fans. The blowers exhaust to a common stack.

At PFS sites, the exhaust blowers consist of two, single-stage, adjustable-speed-drive (ASD) fans mounted in series. Both fans operate at high speed during normal operations. During emergency conditions, a single fan can operate at a lower speed to provide the necessary furnace draft. Modulating ID fan speed to maintain the pressure controller setpoint controls the furnace pressure (see FAWB Note B-12). The ID fan inlet damper position remains fixed, based on the damper controller setpoint. An alternate, MANUAL mode allows the operator to control furnace pressure in a manner similar to TOCDF. In this mode, the ASD fans are maintained at a constant speed that is entered into the ID fan speed controllers. The ID fan inlet damper then is manually positioned to maintain the desired furnace pressure. The ASD fans used at PFS sites do not require the bleed-air valves present at TOCDF.

At TOCDF, the exhaust blowers consist of two, single-stage, open-wheel, single-speed fans mounted in series. Each stage has a separate motor, mounting pad, and control instrumentation. Furnace pressure is maintained at a constant negative value by modulating the inlet damper to maintain the setpoint in the pressure controller. The MPF and DFS PASs have emergency exhaust blowers to maintain minimum flow through these furnaces in the event of a power failure (see Section 3.2.7.2). The large motor size of the main PAS exhaust fans at TOCDF requires that the fan motors be started separately to stagger the current surges. Also, SOPs limit the motors to no more than four starts per hour, with a maximum of 12 starts per day. If an alarm shuts down an exhaust blower, after the alarm clears, the PLC attempts to automatically restart the blower in stages, first stage followed by the second stage. If automatic restart is unsuccessful, the blower defaults to the MANUAL mode to prevent multiple restart attempts in a short period of time.

The open-wheel design of TOCDF fans eliminates the need for blower surge protection at low flow. The power input is so great, however, that a minimum flow must be maintained through the blower to cool the fan wheels and avoid excessive expansion. During startup, which can require extreme turndown conditions, a bleed-air valve located upstream of the mist eliminator vessel provides this minimum flow. The bleed air valve is capped during processing to prevent any flow through the line. This eliminates a potential source for uncontrolled agent migration to the atmosphere in the event that agent vapors entered the PAS. In addition, the State of Utah was concerned that the bleed air could dilute the emissions and distort the calculated efficiency of the furnace/PAS system.

3.2.7.1 TOCDF Exhaust Blower Lube Oil System

At TOCDF, a lube oil system cools and lubricates four ID fan bearings, two for each stage. The lube oil system consists of a normal lube oil pump, a standby lube oil pump, an oil reservoir, a reservoir heater, a cooling fan, and a fan-cooled heat exchanger. The lube oil system supplies both the first and second stage exhaust blower fans. At PFS sites, the ASD fans are internally lubricated and do not rely on a lube oil support system

The TOCDF lube oil pumps operate in a lead/lag manner, with pump selection determined using a local, panel-mounted selector switch. PUMP START mode is using a local, panel-mounted local/off/remote (LOR) switch. With the LOR switch in REMOTE, a signal from the CON starts the lube oil system, using the pump last locally designated as lead. With the LOR switch in LOCAL, start either pump from the local panel using pushbuttons, one for each pump; the lead/lag switch is not active. Another set of pushbuttons, one for each pump, stops the pumps when they are in LOCAL. A single emergency stop pushbutton stops

both pumps, whether in LOCAL or REMOTE. The CON also can stop the system, whether in LOCAL or REMOTE, through a separate, normally closed PLC contact.

When the system is in REMOTE, the lag pump starts on low oil pressure or low oil flow to any one of the four bearings, two for each stage. The lead pump continues to run. The low oil pressure alarms in the CON to alert the operator of the lag pump start. Low oil flow also alarms, but the four low-flow switches are ganged to a single, common, low-flow alarm. Either alarm should initiate local operator action, first to switch the lead selector, then to push the reset button that clears the alarms and turns off the lag, originally the lead.

Low-low pressure is transmitted to the PLC to alarm in the CON. Low-low lube oil flow on any one of the bearings results in shutdown of that stage. The two low-low flow switches for each stage are ganged to common low-low flow alarms, one for each stage. Low-low level in the oil reservoir alarms in the CON to shutdown the ID blower, and through supplier's hardwired interlocks, shuts down the pumps and reservoir heater. All other alarm conditions are individually indicated at the local panel, but are collected and sent to the PLC as a common trouble alarm. In addition, a temperature switch is hardwired to start a lube oil cooling fan when the lube oil temperature exceeds 115º F. The lube oil system alarms and interlocks are included in the TOCDF Alarm and Interlock matrices in Appendix C.

3.2.7.2 TOCDF Emergency Exhaust Blowers

The only furnace systems equipped with emergency exhaust blowers are the DFS and MPF at TOCDF. The emergency blowers maintain minimum flow through the furnace during a power failure. Whereas, at PFS sites, a single stage of the exhaust blower can be loaded on the onsite emergency diesel generators and operated at reduced speed to maintain minimum flow through the furnace during a power failure.

At TOCDF, the emergency blower can provide enough draft for safe furnace shutdown even though it is significantly smaller than the main blower (see DFS and MPF programmatic process FAWB Books 25 and 27, respectively). If power fails, the main blower continues to provide furnace draft for several minutes, while the wheels continue to spin under their own momentum. Emergency power is established during that time. The emergency exhaust blower automatically starts when the emergency diesel generator comes up to speed after a LOOP.

While the main exhaust blower continues to spin down, the main blower inlet damper continues to control furnace pressure, and the main blower outlet damper remains open. At a certain point on the main fan spindown, the pressure differential across the main blower matches the rated differential pressure of the emergency blower. At this point, indicated by the closure of a high-pressure switch, the inlet and outlet dampers on the emergency blower open, and the outlet damper on the main blower closes.

3.2.8 Common Stack and Monitoring

After passing through the PAS/PFS, exhaust gas enters the atmosphere from the common furnace stack. Common stack emissions at all sites are continually monitored for the presence of agent and nitrogen oxides. Agent monitoring consists of three ACAMS. Two of the ACAMS are online constantly. The third unit serves as a backup unit when one of the other units is offline for challenging, calibration, or repair. The two online ACAMS operating cycles are staggered to allow one unit to be in the analysis mode while the other is

sampling, which provides sampling 100% of the time. The following conditions cause the PLC to generate stop feed signals for all furnaces: (1) agent detected, (2) malfunction of an online ACAMS, (3) an online ACAMS is taken offline without placing the backup in service, and (4) the online ACAMS operating cycles are not staggered properly.

At ANCDF and PBCDF, stack gases also are monitored for sulfur oxides. At TOCDF, stack emissions are additionally monitored for total hydrocarbons and moisture content (At sites with a PFS, moisture content is monitored upstream of the PFS filters on each furnace PFS).

Prior to connecting to the common stack, individual furnace exhaust gases are monitored by ACAMS for agent, and by continuous emission monitoring system (CEMS) analyzers for nonagent gases. LIC and MPF exhaust gases are monitored by CEMS analyzers to detect carbon monoxide (CO) and oxygen (O_2) concentrations. At TOCDF, redundant CEMS analyzers monitor LIC and MPF exhaust gases downstream of the exhaust blowers. At follow-on sites, one set of analyzers monitors the LIC and MPF exhaust gases as they exit the afterburner, and the other set of analyzers monitors the exhaust gases downstream of the exhaust blowers (see FAWB Note B-13).

CEMS analyzers monitor DFS exhaust gases to determine concentrations of CO, O_2, and carbon dioxide (CO_2). The CO_2 concentration is monitored to calculate the DFS combustion efficiency. At PFS sites, one set of analyzers monitors DFS exhaust gases for CO, O_2, and CO_2 as they exit the afterburner. The second set of analyzers, located downstream of the exhaust blowers, monitors the exhaust gases for CO and O_2 only (see FAWB Note B-13). At TOCDF, redundant CEMS analyzers for CO, O_2, and CO_2 monitor DFS exhaust gases downstream of the exhaust blowers.

3.2.9 TOCDF PAS Condensate Removal System

When moisture-laden exhaust from the TOCDF PASs contacts colder connecting PAS exhaust ducting, the moisture condenses. Condensate collects in the TOCDF PAS at two primary locations: (1) the base of nonoperating main exhaust fans, and (2) the base of the common stack. In addition, the CEMS analyzers condense moisture from the exhaust gas stream.

A PAS condensate removal system was added at TOCDF to collect the condensate (see FAWB Note B-14). A closed loop return system removes condensate from the ID fans, common stack, and the CEMS monitors. The condensate is piped to two condensate collectors, and pneumatically pumped directly into recovered water tank PAS-TANK-103 for use as quench brine makeup water (see Section 3.2.10). A mechanical float level switch activates the collectors. When the upper level is reached in the collector, the air vent closes and the air inlet opens. Plant air then forces the condensate out of the collector and transfers it to the recovered water tank.

3.2.10 Recovered Water System

The recovered water system minimizes wastewater generated onsite by recovering and reusing a portion of it to supplement makeup water to the quench brine. At PFS sites, the recovered water system collects water from two sources: (1) the PAS area sump, and (2) blowdown from the steam generating boilers. Originally at TOCDF, the recovered water system could collect water from four sources: (1) the PAS area sump, (2) onsite treated

sewage effluent, (3) mist eliminator acid wash system discharge, and (4) blowdown from the steam generating boilers. Due to local permit conditions and the fact that the mist eliminator acid wash system is no longer used (see FAWB Note B-10), the TOCDF recovered water system currently receives water from only two of these four sources: (1) blowdown of the boilers[8], and (2) onsite treated sewage effluent. The PAS condensate removal system, a fifth source incorporated at TOCDF (see Section 3.2.9), also supplies water to the recovered water tank (see FAWB Note B-10).

Recovered water collects in PAS-TANK-103, a 10,000-gallon recovered water tank located *within the PAS building*. Water from the recovered water tank can be supplied to the PAS quench brine loops for any of the furnace systems. Two recovered water feed pumps deliver water from the recovered water tank to the PAS quench brine recirculation loops. Normally, one pump operates and the other serves as a spare[9]. If recovered water is available and there are no alarm conditions in the PAS, the PLC opens a block valve on the recovered water line, allowing the quench tower to use recovered water. If the scrubber sump level reaches high level or any shutdown alarm occurs, the valve closes again.

3.2.11 PAS Sump System

The PAS area sump serves as a central collection point for a number of area sumps. These sumps include the DUN PAS sump, the brine surge tank area sump, the BRA and BRA PAS area sumps, the steam generating condensate return area sump (TOCDF only), the bulk chemical unloading area sump, and the chemical feed system sump. The PAS area sump discharges liquid waste to the recovered water tank, or to *the brine surge tanks* at TOCDF only, using PAS-PUMP-110, an air-operated, diaphragm sump pump.

3.3 CONTROL SEQUENCE LIST

The following sections present the control sequences for PAS/PFS startup, normal shutdown, emergency shutdown, and loss of power operations. The control sequences are based on the TOCDF PLC code, TOCDF SOPs, preliminary ANCDF PLC code, and DSIC input.

The following sequences are annotated to indicate the equipment differences between PFS sites and sites with no PFS, the difference between the type of exhaust blowers at TOCDF and the other sites, and the presence of emergency exhaust blowers for the MPF and DFS at TOCDF (see Section 3.2.7.2).

3.3.1 PAS/PFS Startup Sequence

Verify the following PAS/PFS controller setpoints and valve lineups: process water, caustic, TOCDF exhaust-blower lube oil, and exhaust duct dampers. Then, initiate PAS/PFS startup from the CON by placing the PAS/PFS control screens in AUTO (see Appendices D and E). The control interlocks ensure that the equipment automatically starts in the proper order, as follows (see Appendix C):

---

[8] Since TOCDF indefinitely suspended BRA operations, the TOCDF recovered water currently tank does not receive blowdown from the boilers (see FAWB Note B-6).

[9] *TOCDF installed a return line from the recovered water pump discharge to PAS-TANK-103 to prevent overheating the pump during dead-head conditions (Ref. TEMP2614PAS).*

(A) Scrubber, Venturi, and Quench:

(1) If there is sufficient liquid level in the chimney tray, the clean liquor pump automatically starts and the flow, level, TOCDF density, and pH controllers operate in AUTO. If there is insufficient liquid level, the pumps do not start, which inhibits the pH controller and prevents the addition of caustic. The level controller automatically adds water. When the minimum level is reached, the pump starts and the pH controller resumes automatic control. At PFS sites, the clean liquor air coolers are aligned to have clean liquor flow through the air coolers.

(2) If there is sufficient liquid level in the scrubber sump, the quench brine pump automatically starts and the flow, level, density, and pH controllers operate in AUTO. If there is insufficient liquid level, the pumps do not start, which inhibits the pH controller and prevents the addition of caustic. The level controller automatically adds water through the quench tower nozzles. When the minimum level is reached, the pump starts and the pH controller resumes automatic control.

(3) The venturi automatically controls differential pressure, which causes the throat to close until the exhaust blower begins to develop sufficient furnace draft. As flow develops, automatic control continues and the controller opens the throat to maintain differential pressure.

(B) Mist Eliminator Vessel:

(1) If there is sufficient liquid level in the mist eliminator vessel when the control screen is placed in AUTO, the mist eliminator water return pump automatically starts.

(2) The level control loop automatically maintains level.

(C) Clean Liquor Air Cooler:

(1) Verify the valve lineup for the clean liquor flow to the coolers. Ensure the appropriate clean liquor air cooler Advisor Screen(s) (i.e., DC1, DC2, MFC, L1C, or L2C) is (are) in AUTO.

(2) The cooling fan starts if the interlocks for the individual fan are satisfied. The temperature controller on the cooling unit controls the cooling fan speed to maintain the clean liquor temperature exiting the cooling tube bundle.

(D) Exhaust Gas Reheater:

When the PAS NORMAL signal (see Section 3.3.2) is received and system purge is complete, the CRO proceeds.

(1) Line up all valves, including fuel gas, instrument air, plant air, and combustion air. A high or low pressure on the fuel supply line generates a High and Low pressure alarm on the *local BMS panel.* Low air pressure on the supply instrument airline also causes a low pressure alarm on the *BMS panel.*

(2) Ensure the appropriate gas reheater control screen (i.e., DFF, MFF, L1F, or L2F) is in AUTO. If the PAS NORMAL condition exists, the reheater combustion air blower starts. If the PFS gas reheater and combustion air blower selector switch is in REMOTE and the PFS gas reheater system is not purged, the local PFS gas reheater control panel initiates a purge cycle. During purge, the purge status contact from the reheater closes and is indicated on the Advisor Screen.

(3) At the beginning of the purge cycle, The BMS drives the combustion air control valve to the High-Fire position. The combustion air control valve is driven full open during purge, and the High-Fire contact on the valve starts the purge timer. When the purge timer times out, the combustion air valve is driven to the Low-Fire position, where mechanical stops hold the position at a preset minimum. The Low-Fire contact on the combustion air valve is wired directly into the BMS to enable the light off sequence to occur. When the Low-Fire position contact of the combustion air control valve closes and purge is complete, the BMS initiates a trial for ignition to light the gas pilot. Once the UV scanner senses the spark-ignited maintained pilot, the main block valves open and the bleed valve closes, allowing the burner to ignite on main flame. Also, after main flame is sensed, a BURNER ON contact from the BMS closes and signals the PLC to initiate temperature control of the reheater.

Startup of the reheater unit can also be manually initiated by the outside operator. In LOCAL mode, the reheater unit operates as a stand-alone device with a self-contained BMS. A lockout and power-on condition can be reset locally at the reheater unit. A PLC input provides remote mode indication from the selector switch. Separate outputs are provided from the PLC for Start and Stop.

The combustion air blower can be started independent of the reheater unit BMS. Separate outputs are provided from the PLC for start and stop. A PLC input provides remote mode indication from the selector switch. In addition, the auxiliary contact on the combustion air motor starter is wired to the BMS interlock circuit.

(E) PFS Carbon Filter Units:

The PFS carbon filter units are maintained on-line at all times, as long as the temperature from the exhaust gas reheater is less than 180°F. Thus, there is no startup sequence for the PFS carbon filter units other than verifying that the bypass damper is closed and the dampers for the inlet and outlet to the selected filter unit are open prior to staring the ID fan.

(F) Exhaust Blower:

(1) The exhaust blowers are started with the inlet damper closed and the outlet damper open, except for the DFS. The DFS is started with the inlet damper set at 15%. The CRO positions the dampers, enters the appropriate setpoint into the furnace pressure controller, and places the ID fan screen in AUTO. At TOCDF, if the minimum-oil reservoir level is satisfied, the lube-oil pump automatically starts.

(2) At PFS sites, the second stage automatically starts. If the outlet damper for the MPF and DFS PASs is not already open, it opens automatically when the second stage starts. After a time delay to allow the initial current inrush to the second stage to subside, the first stage automatically starts (see Appendix D for details). At TOCDF, after the lube oil system has been running long enough to allow lube oil pressure to build, the second stage of the exhaust blower automatically starts.

(3) At TOCDF only, after a time delay following start of the exhaust blower and opening of the outlet damper, the inlet damper ramps open to 45%, at 1% per second. The damper then releases to AUTO. If the furnace pressure decreases below the pressure controller setpoint prior to reaching 45%, the inlet damper releases to AUTO at that point. As furnace draft develops, the inlet damper automatically modulates to control furnace-chamber pressure.

(4) At PFS sites, with the ID fan screen in AUTO, the inlet damper automatically opens to a fixed position. Initially set at 100%, this position can be modified during systemization. The ASD fan speed modulates to maintain the setpoint in the furnace pressure controller.

(5) At TOCDF only, after the blower establishes operating speed, the motor current decreases to a steady value. The current falls below the low-current setting if the flow rate is below the minimum for blower operation, causing an alarm in the control room. The CRO can increase bleed airflow to meet minimum ID fan flow requirements.

3.3.2 PAS Normal

At PFS sites, the PAS NORMAL condition is being redefined to include PFS components. The DSIC recommends defining two different conditions: (1) PAS NORMAL – includes the TOCDF PAS NORMAL conditions with the addition of, "clean liquor air coolers enabled." PAS NORMAL would be used as a permissive to start the furnace combustion air blower; (2) PAS/PFS NORMAL – includes all conditions in item 1, with the addition of, "furnace combustion air blower running," and "PFS gas reheater unit running." PAS/PFS NORMAL would be used as a permissive to light the furnace burners.

At TOCDF, the following conditions define the PAS NORMAL condition. *When PAS NORMAL conditions are satisfied, the PLC automatically starts the combustion air blower(s) for the associated furnace. The furnace operator then is permitted by SOP to begin furnace startup* (see MPF FAWB Book 27, DFS FAWB Book 25, and LIC FAWB Book 26):

(A) Quench brine pump running

(B) Clean liquor pump running

(C) Scrubber sump level not high and high-high

(D) Scrubber sump level not low and low-low

(E) Quench tower level not high-high

(F) Quench outlet temperature not high-high-high

(G) Mist eliminator vessel (or spare, if aligned) level not high-high

(H) Exhaust blower running (motor contact of either of the two stages)

(I) Furnace pressure control in AUTO (DFS only)

3.3.3 Normal PAS/PFS Shutdown

The PAS/PFS is shut down only after shutdown and cooling of the associated furnace (i.e., DFS < 200°F, LIC <200°F, MPF AFB < 350°F, and Quench Tower < 100°F). At this point, the operator can use the PAS/PFS control screens to shut down system components as follows:

(A) PFS Sites

(1) Stop the PFS exhaust gas reheater unit burner.

(2) Stop the exhaust blower. After the exhaust blower stop contacts are made, the outlet damper automatically closes, resulting in automatic closure of the inlet damper.

(3) Stop *and drain* the clean liquor air cooler(s), mist eliminator water return pump, clean liquor pump, and quench brine pump. This also closes the caustic addition pH controller.

(4) Place in manual and drive the level control valves for both quench brine and clean liquor to closed position.

(5) Close all manual block valves for all equipment.

(B) TOCDF[10]

(1) The scrubber brine sump level controller setpoint can be decreased at the start of furnace temperature ramp-down to minimize wastewater.

(2) Stop the demister water return pump.

(3) Stop the exhaust blower. Secure the first stage and then the second stage.

(*4*) Stop the clean liquor pumps. This also closes the caustic addition pH and density controllers; a clean liquor or quench brine pump must be in service while an ID fan is running.

(5) Stop the quench brine pumps. This also closes the caustic addition pH and density controllers; a clean liquor or quench brine pump must be in service while an ID fan is running.

(6) The lube oil system should remain in service until the shift plant manager directs shutdown.

3.3.4 PAS/PFS Valve Manifold

PFS carbon filter unit switching capabilities are described in section 3.2.6.4. Detailed descriptions of filter alignments for the UMCDF DFS, MPF, LIC 1, and LIC 2 systems are described in the following subsections. ANCDF LIC tag numbers are similar to

---

[10] *The sequence listed reflect the SOP shutdown sequence for TOCDF MPF PAS equipment. The SOP shutdown sequence is slightly different for the LIC and DFS PAS equipment.*

UMCDF LIC 2 tag numbers and PBCDF LIC tag numbers are similar to UMCDF LIC 1 tag numbers. Therefore, in the following discussions, LIC 1 and PFS-FILT-109 discussions do not apply to ANCDF, and LIC 2 and PFS-FILT-209 discussions do not apply to PBCDF.

The interlocks discussed in the following subsections were developed by applying the following minimum flow path criteria:

1. *For the DFS, the criteria for the minimum flow path is met by at least two filters online with at least one filter being on the larger duct header (PFS-FILT-111, -112, or -113), by an open bypass valve (114-XV-449), or by a closed exhaust blower outlet valve (24-XV-073).*
2. *For the MPF system, the minimum flow path is met by at least one filter online (PFS-FILT-113, -110, -109, or -209), by an open bypass valve (114-XV-093), or by a closed exhaust blower outlet valve (24-XV-282).*
3. *For the LIC 1 system, the minimum flow path required is met by at least one filter online (PFS-FILT-113, -110, -109, or -209), by an open bypass valve (114-XV-550), or by a closed exhaust blower outlet valve (24-XV-074).*
4. *For the LIC 2 system, the minimum flow path required is met by at least one filter online (PFS-FILT-113, -110, -109, or -209), by an open bypass valve (114-XV-450), or by a closed exhaust blower outlet valve (24-XV-715).*

For all of the following scenarios, if a valve is already closed, it will be allowed to remain closed. When the term spare filter is used, it refers to the common spare (PFS-FILT-113) or an unused filter from the MPF system (PFS-FILT-110), the LIC 1 system (PFS-FILT-109), or the LIC 2 system (PFS-FILT-209). The DFS filters cannot be used as spares for other systems because they cannot be isolated from the DFS.

3.3.4.1 DFS

For the DFS, the bypass valve (114-XV-449) will not be allowed to close (it will be inhibited from closing whether it is in auto or manual), unless one of the following three conditions are met:

1. *The high-high temperature has NOT been reached (114-TSHH-430), or*
2. *The DFS is aligned to at least two filters in one of the combinations shown in Table 3.5 which ensures that at least one of the filters is on one of the larger ducts, or*
3. *The exhaust blower outlet valve (24-XV-073) is closed.*

The valves that connect the DFS to the shared manifold (114-XV-413 and -414) will not be allowed to close (they will be inhibited from closing whether they are in auto or manual) if the DFS requires a spare filter to meet its minimum flow path requirement. This means that to close 114-XV-413 and -414 one of the following three conditions must be satisfied:

1. *The DFS is aligned to both filters PFS-FILT-111 and –112, or*
2. *The DFS filter bypass valve (114-XV-449) is open, or*

3. *The DFS exhaust blower outlet valve (24-XV-073) is closed.*

The valves that align the DFS to filter PFS-FILT-111 (114-XV-440 and -441) will not be allowed to close (they will be inhibited from closing whether they are in auto or manual), unless any of the following four conditions is met:

1. *The DFS is aligned to filter PFS-FILT-112 and –113, or*
2. *The DFS is aligned to filter PFS-FILT-112 or -113 and at least one other filter (PFS-FILT-110, -109, or -209) as shown in Table 3.5, or*
3. *The DFS filter bypass valve (114-XV-449) is open, or*
4. *The DFS exhaust blower outlet valve (24-XV-073) is closed.*

Table 3.5 DFS PFS Filter Combinations[a]

Combination #	PFS Filters (PFS-FILT-XXX)	
Default	-111	-112
CS (Common Spare) 1	-111	-113
CS 2	-112	-113
1	-111	-110
2	-111	-109 [a]
3	-111	-209 [a]
4	-112	-110
5	-112	-109 [a]
6	-112	-209 [a]
7	-113	-110
8	-113	-109 [a]
9	-113	-209 [a]

[a] *ANCDF does not have PFS-FILT-109 and PBCDF does not have PFS-FILT-209.*

Similarly, the valves that align the DFS to filter PFS-FILT-112 (114-XV-442 and -443) will not be allowed to close (they will be inhibited from closing whether they are in auto or manual), unless any of the following four conditions is met:

1. *The DFS is aligned to filter PFS-FILT-111 and –113, or*
2. *The DFS is aligned to filter PFS-FILT-111 or -113 and at least one other filter (PFS-FILT-110, -109, or -209) as shown in Table 3.5, or*
3. *The DFS filter bypass valve (114-XV-449) is open, or*
4. *The DFS exhaust blower outlet valve (24-XV-073) is closed.*

3.3.4.2 LIC 1 System (PBCDF and UMCDF only)

For LIC 1, the bypass valve (114-XV-550) will not be allowed to close (it will be inhibited from closing whether it is in auto or manual), unless one of the following three conditions is met:

1. *The high-high temperature has NOT been reached (114-TSHH-533), or*
2. *The LIC 1 is aligned to at least one filter (PFS-FILT-109, -110, -113, or -209), or*
3. *The exhaust blower outlet valve (24-XV-074) is closed.*

The valves that align the LIC 1 system to the filter system (114-XV-583 and -584) will not be allowed to close (they will be inhibited from closing whether it is in auto or manual), unless either one of the following two conditions is met:

1. *The LIC 1 filter bypass valve (114-XV-550) is open, or*
2. *The LIC 1 exhaust blower outlet valve (24-XV-074) is closed.*

The valves that isolate filter PFS-FILT-109 from the system (114-XV-454 and -455) will not be allowed to close (they will be inhibited from closing whether they are in auto or manual), unless either one of the following two conditions is met:

1. *The filter duct is isolated (i.e., valves 114-XV-515, -516, -583, and -584 are all closed), or*
2. *The LIC 1 system is aligned to a spare filter (PFS-FILT-110, -113, or -209).*

The valves that connect filter PFS-FILT-109 to the shared header (114-XV-515 and -516) will not be allowed to close (they will be inhibited from closing whether they are in auto or manual) if the LIC 1 system requires a spare filter to meet its minimum flow path requirement or if another furnace is using filter PFS-FILT-109 to meet its minimum flow path requirement.

3.3.4.3 LIC 2 System (ANCDF and UMCDF only)

For LIC 2, the bypass valve (114-XV-450) will not be allowed to close (it will be inhibited from closing whether it is in auto or manual), unless one of the following three conditions is met:

1. *The high-high temperature has NOT been reached (114-TSHH-433), or*
2. *The LIC 2 is aligned to at least one filter (PFS-FILT-109, -110, -113, or -209), or*
3. *The exhaust blower outlet valve (24-XV-715) is closed.*

The valve that aligns the LIC 2 system to the filter system (114-XV-410 and -409) will not be allowed to close (it will be inhibited from closing whether it is in auto or manual) unless either one of the following two conditions is met:

1. *The LIC 2 filter bypass valve (114-XV-450) is open, or*
2. *The LIC 2 exhaust blower outlet valve (24-XV-715) is closed.*

The valves that isolate filter PFS-FILT-209 from the system (114-XV-436 and -437) will not be allowed to close (they will be inhibited from closing whether they are in auto or manual) unless either of the following conditions are met:

1. *The filter duct is isolated (i.e., valves 114-XV-410, -409, -415, and -416 are all closed), or*
2. *The LIC 2 system is aligned to a spare filter (PFS-FILT-109, -110, or -113).*

The valves that connect filter PFS-FILT-209 to the shared header (114-XV-415 and -416) will not be allowed to close (they will be inhibited from closing whether they are in auto or manual) if the LIC 2 system requires a spare filter to meet its minimum flow path requirement or another furnace is using filter PFS-FILT-209 to meet its minimum flow path requirement.

3.3.4.4 MPF

For the MPF system, the bypass valve (114-XV-093) will not be allowed to close (it will be inhibited from closing whether it is in auto or manual), unless one of the following three conditions is met:

1. *The high-high temperature has NOT been reached (114-TSHH-097), or*
2. *The MPF is aligned to at least one filter (PFS-FILT-113, -110, -109, or -209), or*
3. *The exhaust blower outlet valve (24-XV-282) is closed.*

The valves that align the MPF system to the filter PFS-FILT-110 (114-XV-131 & -132) will not be allowed to close (they will be inhibited from closing whether they are in auto or manual), unless either of the following two conditions is met:

1. *The MPF filter bypass valve (114-XV-093) is open, or*
2. *The MPF exhaust blower outlet valve (24-XV-282) is closed.*

The valves that isolate filter PFS-FILT-110 from the system (114-XV-438 and -439) will not be allowed to close (they will be inhibited from closing whether they are in auto or manual), unless either of the following two conditions is met:

1. *The filter duct is isolated (i.e., valves 114-XV-131, -132, -094, and -095 are all closed), or*
2. *The MPF system is aligned to a spare filter (PFS-FILT-113, -109, or -209).*

The valves that connect filter PFS-FILT-110 to the shared header (114-XV-094 and -095) will not be allowed to close (they will be inhibited from closing whether they are in auto or manual) if the MPF system requires a spare filter to meet its minimum flow path requirement or if another furnace is using filter PFS-FILT-110 to meet its minimum flow path requirement.

3.3.4.5 Common Manifold and Spare Filter

The valves that isolate the common spare filter PFS-FILT-113 from the system (114-XV-487 and -488) will not be allowed to close (they will be inhibited from closing whether they are in auto or manual), unless the filter duct is already isolated (i.e., valves 114-XV-413, -414, -094, -095, -515, -516, -415, and -416 are all closed) or no furnace system requires filter PFS-FILT-113 to meet its minimum flow path requirement.

The valves that allow a furnace system to connect to the common manifold duct are interlocked so that no two furnace systems use the common manifold simultaneously. For

instance, if the MPF is connected to the common manifold (if 114-XV-131 or -132 are open and 114-XV-094 or -095 are open), then LIC 1 will not be able to connect to the common manifold (if 114-XV-583 or -584 is open, then 144-XV-515 and -516 will be inhibited from opening and conversely, if either 114-XV-515 or -516 is open, then 114-XV-583 and -584 will be inhibited from opening). Logic for valves 114-XV-413 and -414 is also included that will inhibit them from opening under similar circumstances. See system discussion in previous sections for more details.

3.3.4.6 Uninterlocked Valves

There are no interlocks that prevent opening the individual filter isolation valves (114-XV-440, -441, -442, -443, -487, -488, -438, -439, -454, -455, -436, and -437). There are no interlocks that prevent opening the furnace system filter bypass valves (114-XV-449, -093, -550, and -450). Opening of the filter bypass valves will initiate a stop feed. In addition, these bypass valves are automatically opened and feed is stopped for the affected system when the high-high temperature of 180°F is reached (114-TSHH-430, -097, -533, and -433). Also, at UMCDF only, a stop feed is initiated at 170°F as a rolling 1-hour average.

3.3.5 Emergency PAS/PFS Shutdown

The operator can initiate an emergency shutdown by pushing the furnace emergency-stop (E-stop) button on any one of five consoles in the CON. This results in the interruption of power to most pumps and blowers in the PAS, with all valves being driven to the safe position.

At PFS sites, the quench brine pump, clean liquor pump, clean liquor air cooler(s), and gas reheater are not shutdown from the console E-stop. One stage of the ASD exhaust ID fan remains running at reduced speed to provide furnace draft. At TOCDF, the quench brine pump remains running. If necessary, the emergency quench nozzles cool the hot exhaust gases that flow during the time it takes for the exhaust blower to spin down.

3.3.6 Loss of Power

If the plant main power fails, all pumps and blowers stop; however, the exhaust blower continues to provide draft while it spins down. At PFS sites, when the DICO is received by the DFS, *LIC* and MPF PAS controllers identifying that power is established, one of the stages of the ASD fans restarts and runs at a speed that limits its power usage to 25 hp *(see FAWB Note B-18)*.

At TOCDF, for the MPF and DFS, the emergency exhaust blower starts immediately after the PAS controller receives the DICO identifying that emergency power is established. When the main ID fan inlet high-pressure switch opens and the blower is on, the inlet and outlet dampers for the emergency blower open. If the PLC has received the emergency power DICO, it does not close the main-blower outlet damper until the emergency dampers are verified open. The main blower inlet damper stays in AUTO until the outlet damper closes, at which time the inlet damper also closes.

At all sites the process water pumps start either immediately or 10 seconds after the emergency power DICO is received. Therefore, emergency quench water is available, if needed, to cool furnace exhaust gases before the quench brine pumps restart. The quench brine pumps are restarted during the first minute following receipt of the emergency power

DICO. Specific restart times vary from site to site based on the generator loading capabilities and priorities.

After emergency furnace draft is established, the operator can attempt to do an emergency relight of one burner in the DFS and MPF afterburner (see DFS FAWB Book 25 and MPF FAWB Book 27). At PFS sites, the PAS/PFS continues to function with the quench brine pump, clean liquor pump and air coolers, and a single stage of the ID fan until main power is reestablished or complete shutdown is initiated. *The clean liquor air cooler fans run at half speed to limit the load on the emergency diesel generators.* At TOCDF, the *DFS PAS and MPF* PAS continue to function with *a* quench brine pump*, a clean liquor pump,* and *the* emergency exhaust blower until main power is reestablished or complete shutdown is initiated. *The LIC PAS operates with a quench brine pump only.* LIC ID fan dampers are on the UPS and remain open during loss of power to allow natural furnace draft.

SECTION 4
COMPONENT SUMMARY

4.1 PAS/PFS[1] SYSTEM COMPONENTS

The DFS, LIC and MPF PAS/PFS components are grouped in the following nine categories:

- Quench Tower
- Venturi Scrubber
- Scrubber Tower
- Mist Eliminator Vessel
- PAS Filter System (PFS)[1]
- Exhaust Blower
- Recirculation, Transfer, and Feed Pumps
- Recovered Water Tank
- Common Stack

4.1.1 Quench Tower

The quench tower provides the initial cooling and neutralization of the exhaust gases entering each of the PASs. Design parameters for the quench towers associated with each of the furnaces are listed in tables 4.1 through 4.3. For TOCDF and UMCDF, which have 2 LIC furnaces and dedicated PASs, the tag number and P&ID for LIC #1 are listed in Table 4.2 with the LIC #2 tag number and P&ID enclosed in brackets.

[1] For the purpose of the FAWBs, the PAS and PFS are treated as a single system: the PAS/PFS system. Since TOCDF is not equipped with a PFS (see FAWB Note B-4), the PFS designation for the system does not apply; the TOCDF system is simply the PAS.

Table 4.1 DFS PAS Quench Tower Design Parameters

	ANCDF	PBCDF	TOCDF	UMCDF
Quantity	1	1	1	1
Tag #(s)	PAS-TOWR-103	PAS-TOWR-103	PAS-TOWR-103	PAS-TOWR-103
Size	10’6” ID x 40’0”	10’6” ID x 40’0”	10’6” ID x 40’0”	10’6” ID x 40’0”
Design Pressure Temperature	15 psig & full vacuum 1250°F	15 psig & full vacuum 1250°F	15 psig & full vacuum 1250°F	15 psig & full vacuum 1250°F
Construction	Hastelloy C	Hastelloy C	Hastelloy C	Hastelloy C
P&IDs	AN-6-D-506	PB-6-D-506	TE-6-D-506	UM-6-D-506

Table 4.2 LIC PAS Quench Tower Design Parameters

	ANCDF	PBCDF	TOCDF	UMCDF
Quantity	1	1	2	2
Tag #(s)	PAS-TOWR-204	PAS-TOWR-104	PAS-TOWR-104 [PAS-TOWR-204]	PAS-TOWR-104 [PAS-TOWR-204]
Size	6’0” ID x 40’0”	6’0” ID x 40’0”	6’0” ID x 40’0”	6’0” ID x 40’0”
Design Pressure Temperature	15 psig & full vacuum 1250°F	15 psig & full vacuum 1250°F	15 psig & full vacuum 1250°F	15 psig & full vacuum 1250°F
Construction	Hastelloy C	Hastelloy C	Hastelloy C	Hastelloy C
P&IDs	AN-6-D-511	PB-6-D-501	TE-6-D-501 [TE-6-D-511]	UM-6-D-501 [UM-6-D-511]

Table 4.3 MPF PAS Quench Tower Design Parameters

	ANCDF	PBCDF	TOCDF	UMCDF
Quantity	1	1	1	1
Tag #(s)	PAS-TOWR-102	PAS-TOWR-102	PAS-TOWR-102	PAS-TOWR-102
Size	6’3” ID x 40’0”	6’3” ID x 40’0”	6’3” ID x 40’0”	6’3” ID x 40’0”
Design Pressure Temperature	15 psig & full vacuum 1250°F	15 psig & full vacuum 1250°F	15 psig & full vacuum 1250°F	15 psig & full vacuum 1250°F
Construction	Hastelloy C	Hastelloy C	Hastelloy C	Hastelloy C
P&IDs	AN-6-D-504	PB-6-D-504	TE-6-D-504	UM-6-D-504

4.1.2 Venturi Scrubber

The venturi scrubber provides the initial removal of particles and acid gases from the exhaust gases entering into each of the PASs. Design parameters for the venturi scrubbers for each of the furnaces are listed in tables 4.4 through 4.6. For TOCDF and UMCDF, which have 2 LIC furnaces and dedicated PASs, the tag number and P&ID for LIC #1 are listed in Table 4.5 with the LIC #2 tag number and P&ID enclosed in brackets.

Table 4.4 DFS PAS Venturi Scrubber Design Parameters

	ANCDF	PBCDF	TOCDF	UMCDF
Quantity	1	1	1	1
Tag #(s)	PAS-SEPA-102	PAS-SEPA-102	PAS-SEPA-102	PAS-SEPA-102
Design Pressure Temperature	15 psig & full vacuum 250°F	15 psig & full vacuum 250°F	15 psig & full vacuum 250°F	15 psig & full vacuum 250°F
Construction	Hastelloy C	Hastelloy C	Hastelloy C	Hastelloy C
P&IDs	AN-6-D-506	PB-6-D-506	TE-6-D-506	UM-6-D-506

Table 4.5 LIC PAS Venturi Scrubber Design Parameters

	ANCDF	PBCDF	TOCDF	UMCDF
Quantity	1	1	2	2
Tag #(s)	PAS-SEPA-203	PAS-SEPA-103	PAS-SEPA-103 [PAS-SEPA-203]	PAS-SEPA-103 [PAS-SEPA-203]
Design Pressure Temperature	15 psig & full vacuum 250°F	15 psig & full vacuum 250°F	15 psig & full vacuum 250°F	15 psig & full vacuum 250°F
Construction	Hastelloy C	Hastelloy C	Hastelloy C	Hastelloy C
P&IDs	AN-6-D-511	PB-6-D-501	TE-6-D-501 [TE-6-D-511]	UM-6-D-501 [UM-6-D-511]

Table 4.6 MPF PAS Venturi Scrubber Design Parameters

	ANCDF	PBCDF	TOCDF	UMCDF
Quantity	1	1	1	1
Tag #(s)	PAS-SEPA-101	PAS-SEPA-101	PAS-SEPA-101	PAS-SEPA-101
Design Pressure Temperature	15 psig & full vacuum 250°F	15 psig & full vacuum 250°F	15 psig & full vacuum 250°F	15 psig & full vacuum 250°F
Construction	Hastelloy C	Hastelloy C	Hastelloy C	Hastelloy C
P&IDs	AN-6-D-504	PB-6-D-504	TE-6-D-504	UM-6-D-504

4.1.3 Scrubber Tower

The scrubber tower provides a second contact interface for the removal of acid gases from the exhaust gases in the PASs. Design parameters for the scrubber towers associated with each of the furnaces are listed in tables 4.7 through 4.9. For TOCDF and UMCDF, which have 2 LIC furnaces and dedicated PASs, the tag number and P&ID for LIC #1 are listed in Table 4.8 with the LIC #2 tag number and P&ID enclosed in brackets.

Table 4.7 DFS PAS Scrubber Tower Design Parameters

	ANCDF	PBCDF	TOCDF	UMCDF
Quantity	1	1	1	1
Tag #(s)	PAS-SCRB-102	PAS-SCRB-102	PAS-SCRB-102	PAS-SCRB-102
Size	9’0” ID x 40’0”	9’0” ID x 40’0”	9’0” ID x 40’0”	9’0” ID x 40’0”
Design Pressure Temperature	15 psig & full vacuum 250°F	15 psig & full vacuum 250°F	15 psig & full vacuum 250°F	15 psig & full vacuum 250°F
Construction	Hastelloy C[a]	Hastelloy C[a]	Hastelloy C	Hastelloy C[a]
P&IDs	AN-6-D-506	PB-6-D-506	TE-6-D-506	UM-6-D-506

[a] Alternate material may be carbon steel with Hastelloy C lining

Table 4.8 LIC PAS Scrubber Tower Design Parameters

	ANCDF	PBCDF	TOCDF	UMCDF
Quantity	1	1	2	2
Tag #(s)	PAS-SCRB-203	PAS-SCRB-103	PAS-SCRB-103 [PAS-SCRB-203]	PAS-SCRB-103 [PAS-SCRB-203]
Size	5'6" ID x 40'0"	5'6" ID x 40'0"	5'6" ID x 40'0"	5'6" ID x 40'0"
Design Pressure Temperature	15 psig & full vacuum 250°F	15 psig & full vacuum 250°F	15 psig & full vacuum 250°F	15 psig & full vacuum 250°F
Construction	Hastelloy C[a]	Hastelloy C[a]	Hastelloy C	Hastelloy C[a]
P&IDs	AN-6-D-511	PB-6-D-501	TE-6-D-501 [TE-6-D-511]	UM-6-D-501 [UM-6-D-511]

[a] Alternate material may be carbon steel with Hastelloy C lining

Table 4.9 MPF PAS Scrubber Tower Design Parameters

	ANCDF	PBCDF	TOCDF	UMCDF
Quantity	1	1	1	1
Tag #(s)	PAS-SCRB-101	PAS-SCRB-101	PAS-SCRB-101	PAS-SCRB-101
Size	5'4" ID x 40'0"	5'4" ID x 40'0"	5'4" ID x 40'0"	5'4" ID x 40'0"
Design Pressure Temperature	15 psig & full vacuum 250°F	15 psig & full vacuum 250°F	15 psig & full vacuum 250°F	15 psig & full vacuum 250°F
Construction	Hastelloy C[a]	Hastelloy C[a]	Hastelloy C	Hastelloy C[a]
P&IDs	AN-6-D-504	PB-6-D-504	TE-6-D-504	UM-6-D-504

[a] Alternate material may be carbon steel with Hastelloy C lining

4.1.4 Mist Eliminator Vessel[2]

The mist eliminator vessel removes entrained moisture from the exhaust gases prior to exiting the PASs. Each furnace has its own dedicated mist eliminator vessel. In addition, two spare mist eliminator vessels are provided; one can be aligned with either the MPF or DFS PAS, and the other services the LIC. At UMCDF and TOCDF, which have two LIC furnace systems, the LIC spare can be aligned with either LIC PAS. At ANCDF and PBCDF, the LIC spare is a dedicated spare for the LIC PAS. Design parameters for the mist eliminator vessels and the spares (spares are listed in separate tables) are listed in

[2] The TOCDF mist eliminator vessel is also referred to as a demister vessel.

tables 4.10 through 4.14. For TOCDF and UMCDF, the tag number and P&ID for LIC #1 are listed in Table 4.11 with the LIC #2 tag number and P&ID enclosed in brackets.

Table 4.10 DFS PAS Mist Eliminator[a] Vessel Design Parameters

	ANCDF	PBCDF	TOCDF	UMCDF
Quantity	1	1	1	1
Tag #(s)	PAS-DMIS-104	PAS-DMIS-104	PAS-DMIS-104	PAS-DMIS-104
Size	13'0" ID x 33'0"	13'0" ID x 33'0"	13'0" ID x 33'0"	13'0" ID x 33'0"
Design Pressure Temperature	5 psig & -5 psig 200°F	5 psig & -5 psig[b] 200°F	15 psig & -5 psig 200°F	5 psig & -5 psig[b] 200°F
Construction	Fiberglass reinforced plastic with Nexus coating	Fiberglass reinforced plastic with Nexus coating	Fiberglass reinforced plastic with Nexus coating	Fiberglass reinforced plastic with Nexus coating
P&IDs	AN-6-D-508	PB-6-D-508	TE-6-D-508	UM-6-D-508

[a] Also referred to as a demister vessel at TOCDF.
[b] *Design pressure per RFI C-PBCDF-003. Stamped rated pressure may be different.*

Table 4.11 LIC PAS Mist Eliminator[a] Vessel Design Parameters

	ANCDF	PBCDF	TOCDF	UMCDF
Quantity	1	1	2	2
Tag #(s)	PAS-DMIS-201	PAS-DMIS-101	PAS-DMIS-101 [PAS-DMIS-201]	PAS-DMIS-101 [PAS-DMIS-201]
Size	11'0" ID x 31'0"	11'0" ID x 31'0"	11'0" ID x 31'0"	11'0" ID x 31'0"
Design Pressure Temperature	5 psig & -5 psig 200°F	5 psig & -5 psig[b] 200°F	15 psig & -5 psig 200°F	5 psig & -5 psig[b] 200°F
Construction	Fiberglass reinforced plastic with Nexus coating	Fiberglass reinforced plastic with Nexus coating	Fiberglass reinforced plastic with Nexus coating	Fiberglass reinforced plastic with Nexus coating
P&IDs	AN-6-D-512	PB-6-D-502	TE-6-D-502 [TE-6-D-512]	UM-6-D-502 [UM-6-D-512]

[a] Also referred to as a demister vessel at TOCDF.
[b] *Design pressure per RFI C-PBCDF-003. Stamped rated pressure may be different.*

Table 4.12 MPF PAS Mist Eliminator[a] Vessel Design Parameters

	ANCDF	PBCDF	TOCDF	UMCDF
Quantity	1	1	1	1
Tag #(s)	PAS-DMIS-103	PAS-DMIS-103	PAS-DMIS-103	PAS-DMIS-103
Size	11'0" ID x 31'0"	11'0" ID x 31'0"	11'0" ID x 31'0"	11'0" ID x 31'0"
Design Pressure	5 psig & -*5* psig	10 psig & -*5* psig[b]	15 psig & -5 psig	5 psig & -*5* psig[b]
Temperature	200°F	200°F	200°F	200°F
Construction	Fiberglass reinforced plastic with Nexus coating	Fiberglass reinforced plastic with Nexus coating	Fiberglass reinforced plastic with Nexus coating	Fiberglass reinforced plastic with Nexus coating
P&IDs	AN-6-D-505	PB-6-D-505	TE-6-D-505	UM-6-D-505

[a] Also referred to as a demister vessel at TOCDF.
[b] *Design pressure per RFI C-PBCDF-003. Stamped rated pressure may be different.*

Table 4.13 MPF/DFS Mist Eliminator[a] Vessel (Spare) Design Parameters

	ANCDF	PBCDF	TOCDF	UMCDF
Quantity	1	1	1	1
Tag #(s)	PAS-DMIS-105	PAS-DMIS-105	PAS-DMIS-105	PAS-DMIS-105
Size	13'0" ID x 33'0"	13'0" ID x 33'0"	13'0" ID x 33'0"	13'0" ID x 33'0"
Design Pressure	5 psig & -*5* psig	5 psig & -*5* psig[b]	15 psig & -5psig	5 psig & -*5* psig[b]
Temperature	200°F	200°F	200°F	200°F
Construction	Fiberglass reinforced plastic with Nexus coating	Fiberglass reinforced plastic with Nexus coating	Fiberglass reinforced plastic with Nexus coating	Fiberglass reinforced plastic with Nexus coating
P&IDs	AN-6-D-527	PB-6-D-527	TE-6-D-527	UM-6-D-527

[a] Also referred to as a demister vessel at TOCDF.
[b] *Design pressure per RFI C-PBCDF-003. Stamped rated pressure may be different.*

Table 4.14 LIC Mist Eliminator[a] Vessel (Spare) Design Parameters

	ANCDF	PBCDF	TOCDF	UMCDF
Quantity	1	1	1	1
Tag #(s)	PAS-DMIS-102	PAS-DMIS-102	PAS-DMIS-102	PAS-DMIS-102
Size	11'0" ID x 31'0"	11'0" ID x 31'0"	11'0" ID x 31'0"	11'0" ID x 31'0"
Design Pressure	5 psig & -*5* psig	5 psig & -*5* psig[b]	15 psig & -5 psig	5 psig & -*5* psig[b]
Temperature	200°F	200°F	200°F	200°F
Construction	Fiberglass reinforced plastic with Nexus coating	Fiberglass reinforced plastic with Nexus coating	Fiberglass reinforced plastic with Nexus coating	Fiberglass reinforced plastic with Nexus coating
P&IDs	AN-6-D-502	PB-6-D-502	TE-6-D-502	UM-6-D-502

[a] Also referred to as a demister vessel at TOCDF.
[b] *Design pressure per RFI C-PBCDF-003. Stamped rated pressure may be different.*

4.1.5 PAS Filter System (ANCDF, PBCDF, and UMCDF)

The PFS is grouped by three subsystems: (1) PFS Clean Liquor Air Cooler, (2) PFS Exhaust Gas Reheater Unit, and (3) PFS Carbon Filter Unit.

4.1.5.1 PFS Clean Liquor Air Cooler

AT ANCDF, PBCDF, and UMCDF, each furnace PAS has dedicated clean liquor air coolers associated with each scrubber tower to lower the temperature of the clean liquor, which in turn lowers the exhaust gas temperature. The primary components of this subsystem are the PFS clean liquor pumps (see subsection 4.1.7.2 for design parameters), clean liquor air coolers, automatic block, control valves, and associated instrumentation. Design parameters for the PFS clean liquor air coolers for each furnace are listed in Tables 4.15 through 4.17. At UMCDF, the PFS clean liquor air cooler components for the two LICs are similar; therefore the parameters are listed in a single column. The tag number and P&ID for LIC #1 are listed with the LIC #2 tag number and P&ID enclosed in brackets.

At each of the three sites, a single air cooler empty out pump is used for all clean liquor air coolers to drain the air coolers when needed and pump the drained fluid to a brine surge tank. Design parameters for the PFS air cooler empty-out pump are listed in Table 4.18.

Table 4.15 DFS PFS Clean Liquor Air Cooler Design Parameters

	ANCDF	PBCDF	UMCDF
Quantity	4	4	4
Tag #(s)	PFS-COOL-115A/B/C/D	PFS-COOL-115A/B/C/D	PFS-COOL-115A/B/C/D
Duty Rating (total)	32.8 MM Btu/hr	32.8 MM Btu/hr	32.86 MM Btu/hr
Design Pressure	125 psig	125 psig	125 psig
Design Temperature	215°F	215°F	215°F
Fan Motor Power (each fan; 2 fans/bay)	40 hp	40 hp	40 hp
P&IDs	AN-6-D-530, -531	PB-6-D-530, -531	UM-6-D-530, -531

Table 4.16 LIC PFS Clean Liquor Air Cooler Design Parameters

	ANCDF	PBCDF	UMCDF
Quantity	2	2	4
Tag #(s)	PFS-COOL-213A/B	PFS-COOL-113A/B	PFS-COOL-113A/B [PFS-COOL-213A/B]
Duty Rating (total)	14.97 MM Btu/hr	15.33 MM Btu/hr	15.1 MM Btu/hr
Design Pressure	125 psig	125 psig	125 psig
Design Temperature	215°F	215°F	215°F
Fan Motor Power (each fan; 2 fans/bay)	30 hp	30 hp	30 hp
P&IDs	AN-6-D-529	PB-6-D-539	UM-6-D-539 [UM-6-D-529]

Table 4.17 MPF PFS Clean Liquor Air Cooler Design Parameters

	ANCDF	PBCDF	UMCDF
Quantity	2	2	2
Tag #(s)	PFS-COOL-114A/B	PFS-COOL-114A/B	PFS-COOL-114A/B
Duty Rating (total)	14.20 MM Btu/hr	12.28 MM Btu/hr	19.09 MM Btu/hr
Design Pressure	125 psig	125 psig	125 psig
Design Temperature	215°F	215°F	215°F
Fan Motor Power (each fan; 2 fans/bay)	30 hp	30 hp	30 hp
P&IDs	AN-6-D-528	PB-6-D-528	UM-6-D-528

Table 4.18 Air Cooler Empty-Out Pump Design Parameters

	ANCDF	PBCDF	UMCDF
Quantity	1	1	1
Tag #(s)	PFS-PUMP-142	PFS-PUMP-142	PFS-PUMP-142
Pump Type	Air-Operated Diaphram	Air-Operated Diaphram	Air-Operated Diaphram
Rated Flow/ Δ Pressure	24 gpm ΔP 40 psi	24 gpm ΔP 33 psi	24 gpm ΔP 53 psi
P&IDs	AN-6-D-528	PB-6-D-528	UM-6-D-528

4.1.5.2 PFS Gas Reheater Unit

Each PFS gas reheater unit uses an in-line, direct-fired duct burner that is supported by a PFS gas reheater blower, automatic block, control valves, and associated instrumentation. Design parameters for the PFS gas reheaters are listed in Table 4.19-21. Design parameters for the PFS gas reheater blowers are listed in Table 4.22-24. Design parameters for the two LIC PFS gas reheaters and the two LIC PFS gas reheater blowers are similar; therefore the parameters are listed in a single column. The tag number and P&ID for LIC #1 are listed with the LIC #2 tag number and P&ID enclosed in brackets.

Table 4.19 DFS PFS Gas Reheater Design Parameters

	ANCDF	PBCDF	UMCDF
Quantity	1	1	1
Tag #	PFS-BURN-103	PFS-BURN-103	PFS-BURN-103
Duty Rating	628,700 Btu/hr	610,700 Btu/hr	626,700 Btu/hr
P&IDs	AN-6-D-524	PB-6-D-524	UM-6-D-524

Table 4.20 LIC PFS Gas Reheater Design Parameters

	ANCDF	PBCDF	UMCDF
Quantity	1	1	2
Tag #	PFS-BURN-201	PFS-BURN-101	PFS-BURN-101 [PFS-BURN-201]
Duty Rating	225,400 Btu/hr	233,700 Btu/hr	201,600 Btu/hr
P&IDs	AN-6-D-525	PB-6-D-535	UM-6-D-535 [UM-6-D-525]

Table 4.21 MPF PFS Gas Reheater Design Parameters

	ANCDF	PBCDF	UMCDF
Quantity	1	1	1
Tag #	PFS-BURN-102	PFS-BURN-102	PFS-BURN-102
Duty Rating	230,000 Btu/hr	233,400 Btu/hr	232,200 Btu/hr
P&IDs	AN-6-D-526	PB-6-D-526	UM-6-D-526

Table 4.22 DFS PFS Reheater Blower Design Parameters

	ANCDF	PBCDF	UMCDF
Quantity	1	1	1
Tag #	PFS-BLOW-103	PFS-BLOW-103	PFS-BLOW-103
Rated Flow/ Δ Pressure	131 scfm ΔP 42 in. wc.	131 scfm ΔP 42 in. wc.	131 scfm ΔP 42 in. wc.
Motor Power	2 hp	2 hp	2 hp
P&IDs	AN-6-D-524	PB-6-D-524	UM-6-D-524

Table 4.23 LIC PFS Reheater Blower Design Parameters

	ANCDF	PBCDF	UMCDF
Quantity	1	1	2
Tag #(s)	PFS-BLOW-201	PFS-BLOW-101	PFS-BLOW-101 [PFS-BLOW-201]
Rated Flow/ Δ Pressure	47 scfm 42 in. wc.	42 scfm 42 in. wc.	42 scfm 42 in. wc.
Motor Power	1 hp	1 hp	1 hp
P&IDs	AN-6-D-525	PB-6-D-535	UM-6-D-535 [UM-6-D-525]

Table 4.24 MPF PFS Reheater Blower Design Parameters

	ANCDF	PBCDF	UMCDF
Quantity	1	1	1
Tag #(s)	PFS-BLOW-102	PFS-BLOW-102	PFS-BLOW-102
Rated Flow/ Δ Pressure	48 scfm ΔP 42 in. wc.	48 scfm ΔP 42 in. wc.	48 scfm ΔP 42 in. wc.
Motor Power	1 hp	1 hp	1 hp
P&IDs	AN-6-D-526	PB-6-D-526	UM-6-D-526

4.1.5.3 PFS Carbon Filter Unit

The primary components of this subsystem are the PFS carbon filter unit, automatic block valves, control valves, and associated instrumentation. There are six PFS carbon filter units at UMCDF and five and ANCDF and PBCDF (UMCDF LIC 1 and PBCDF LIC: PFS-FILT-109, UMCDF LIC 2 and ANCDF LIC: PFS-FILT-209, MPF: PFS-FILT-110, DFS: PFS-FILT-111/112, Spare: PFS-FILT-113). The specifications for all PFS carbon filter units at all sites are similar. Each has a rated capacity of 12,000 acfm.

4.1.6 Exhaust Blower

The exhaust blower provides the motive force for exhaust gas flow. At TOCDF, the exhaust blower consists of two single-stage, open-wheel, single-speed fans mounted in series to form a two-stage blower. Single-stage blowers are also installed for emergency conditions for the DFS PAS and MPF PAS at TOCDF. At ANCDF, PBCDF, and UMCDF, the exhaust blowers are two-stage fans with ASD fans on both stages. Because a single stage ASD fan can be used during emergency shutdown conditions, separate emergency blowers are not provided at these sites. Design parameters for the exhaust blowers at all sites, and the emergency exhaust blowers at TOCDF, are listed in tables 4.25

through 4.28. For TOCDF and UMCDF, which have 2 LIC furnaces and dedicated PASs, the tag number and P&ID for LIC #1 are listed in Table 4.26 with the LIC #2 tag number and P&ID enclosed in brackets.

Table 4.25 DFS Exhaust Blower Design Parameters

	ANCDF	PBCDF	TOCDF	UMCDF
Quantity	1 w/ 2 stages	1 w/ 2 stages	1 w/ 2 stages	1 w/ 2 stages
Tag #(s)	PAS-BLOW-103	PAS-BLOW-103	PAS-BLOW-103	PAS-BLOW-103
Blower Type (Drive)	Motor-driven centrifugal (adjustable speed)	Motor-driven centrifugal (adjustable speed)	Motor-driven centrifugal (single speed)	Motor-driven centrifugal (adjustable speed)
Rated Flow/ Δ Pressure	24,762 acfm ΔP 110 “wc	22,659 acfm ΔP 107.5 “wc	43,666 acfm ΔP 81.1 “wc	24,300 acfm ΔP 110 “wc
Motor Power	500 hp (per stage)	500 hp (per stage)	600 hp (per stage)	500 hp (per stage)
P&IDs	AN-6-D-507	PB-6-D-507	TE-6-D-507	UM-6-D-507

Table 4.26 LIC Exhaust Blower Design Parameters

	ANCDF	PBCDF	TOCDF	UMCDF
Quantity	1 w/ 2 stages	1 w/ 2 stages	1 w/ 2 stages	1 w/ 2 stages
Tag #(s)	PAS-BLOW-204	PAS-BLOW-104	PAS-BLOW-104 [PAS-BLOW-204]	PAS-BLOW-104 [PAS-BLOW-204]
Blower Type (Drive)	Motor-driven centrifugal (adjustable speed)	Motor-driven centrifugal (adjustable speed)	Motor-driven centrifugal (single speed)	Motor-driven centrifugal (adjustable speed)
Rated Flow/ Δ Pressure	9,272 acfm ΔP 125 in. wc.	9,221 acfm ΔP 127.1 in. wc.	19,000 acfm ΔP 100.4 in. wc.	9,220 acfm ΔP 126 in. wc.
Motor Power	250 hp (per stage)	250 hp (per stage)	300 hp (per stage)	250 hp (per stage)
P&IDs	AN-6-D-517	PB-6-D-517	TE-6-D-517 Sh.1 [TE-6-D-517 Sh.2]	UM-6-D-517 Sh.1 [UM-6-D-517 Sh.2]

Table 4.27 MPF Exhaust Blower Design Parameters

	ANCDF	PBCDF	TOCDF	UMCDF
Quantity	1 w/ 2 stages	1 w/ 2 stages	1 w/ 2 stages	1 w/ 2 stages
Tag #(s)	PAS-BLOW-102	PAS-BLOW-102	PAS-BLOW-102	PAS-BLOW-102
Blower Type (Drive)	Motor-driven centrifugal (adjustable speed)	Motor-driven centrifugal (adjustable speed)	Motor-driven centrifugal (single speed)	Motor-driven centrifugal (adjustable speed)
Rated Flow/ Δ Pressure	8,975 acfm ΔP 105 in. wc	8,623 acfm ΔP 104.6 in. wc	22,500 acfm ΔP 77.6 in. wc	8,800 acfm ΔP 105 in. wc
Motor Power	250 hp (per stage)	250 hp (per stage)	250 hp (per stage)	250 hp (per stage)
P&IDs	AN-6-D-505	PB-6-D-505	EG-6-D-505	UM-6-D-505

Table 4.28 TOCDF MPF and DFS Emergency Exhaust Blower Design Parameters

	DFS	MPF
Quantity	1	1
Tag #(s)	PAS-BLOW-107	PAS-BLOW-106
Blower Type	Motor-driven centrifugal	Motor-driven centrifugal
Rated Flow/ Δ Pressure	4,700 acfm ΔP 5.7 “wc	4,320 acfm ΔP 12.3 “wc
Motor Power	10 hp	25 hp
P&IDs	TE-6-D-507	EG-6-D-505

4.1.7 Recirculation, Transfer, and Feed Pumps

The PAS/PFS has a number of recirculation, transfer and feed pumps; some are dedicated to a specific furnace PAS/PFS and others are shared by the different furnace PAS/PFSs. PAS/PFS pumps include the following: quench brine pumps, clean liquor pumps, mist eliminator water return pumps, mist eliminator recirculation pumps (ANCDF & UMCDF only; see FAWB Note B-10), recovered water feed pumps, and the PAS sump pump (air-operated).

4.1.7.1 Quench Brine Pumps

The quench brine pumps transfer the brine solution from the scrubber tower sump to the quench nozzles in the quench tower and the spray nozzles in the venturi scrubber. The PAS for each furnace has two quench brine pumps, either of which can serve as the primary or the spare. Design parameters for the quench brine pumps are listed in tables 4.29 through 4.31. For TOCDF and UMCDF, which have 2 LIC furnaces and dedicated PASs, the tag

number and P&ID for LIC #1 are listed in Table 4.30 with the LIC #2 tag number and P&ID enclosed in brackets.

Table 4.29 DFS Quench Brine Pump Design Parameters

	ANCDF	PBCDF	TOCDF	UMCDF
Quantity	2	2	2	2
Tag #(s)	PAS-PUMP-106 PAS-PUMP-107	PAS-PUMP-106 PAS-PUMP-107	PAS-PUMP-106 PAS-PUMP-107	PAS-PUMP-106 PAS-PUMP-107
Pump Type	Motor-Driven Centrifugal	Motor-Driven Centrifugal	Motor-Driven Centrifugal	Motor-Driven Centrifugal
Rated Flow/ Δ Pressure	685 gpm ΔP 147 psi	630 gpm ΔP 117 psi	642 gpm ΔP 114 psi	680 gpm ΔP 147 psi
Motor Power	100 hp	*100* hp	75 hp	100 hp
P&IDs	AN-6-D-506	PB-6-D-506	TE-6-D-506	UM-6-D-506

Table 4.30 LIC Quench Brine Pump Design Parameters

	ANCDF	PBCDF	TOCDF	UMCDF
Quantity	2	2	4	4
Tag #(s)	PAS-PUMP-211 PAS-PUMP-212	PAS-PUMP-111 PAS-PUMP-112	PAS-PUMP-111 PAS-PUMP-112 [PAS-PUMP-211] [PAS-PUMP-212]	PAS-PUMP-111 PAS-PUMP-112 [PAS-PUMP-211] [PAS-PUMP-212]
Pump Type	Motor-Driven Centrifugal	Motor-Driven Centrifugal	Motor-Driven Centrifugal	Motor-Driven Centrifugal
Rated Flow/ Δ Pressure	284 gpm ΔP 115 psi	287 gpm ΔP 116 psi	221 gpm ΔP 113 psi	285 gpm ΔP 116 psi
Motor Power	40 hp	40 hp	30 hp	40 hp
P&IDs	AN-6-D-511	PB-6-D-501	TE-6-D-501 [TE-6-D-511]	UM-6-D-501 [UM-6-D-511]

Table 4.31 MPF Quench Brine Pump Design Parameters

	ANCDF	PBCDF	TOCDF	UMCDF
Quantity	2	2	2	2
Tag #(s)	PAS-PUMP-102 PAS-PUMP-103	PAS-PUMP-102 PAS-PUMP-103	PAS-PUMP-102 PAS-PUMP-103	PAS-PUMP-102 PAS-PUMP-103
Pump Type	Motor-Driven Centrifugal	Motor-Driven Centrifugal	Motor-Driven Centrifugal	Motor-Driven Centrifugal
Rated Flow/ Δ Pressure	267 gpm ΔP 119 psi	242 gpm ΔP 121 psi	300 gpm ΔP 118 psi	325 gpm ΔP 130 psi
Motor Power	40 hp	40 hp	40 hp	40 hp
P&IDs	AN-6-D-504	PB-6-D-504	TE-6-D-504	UM-6-D-504

4.1.7.2 Clean Liquor Pumps

The clean liquor pumps recirculate clean liquor from the scrubber tower chimney tray over the packed bed in the scrubber tower (through the PFS clean liquor air coolers at ANCDF, PBCDF, and UMCDF). Each furnace has two clean liquor pumps, either of which can serve as the primary or the spare. In addition, ANCDF, PBCDF and UMCDF have a single empty out pump (PFS-PUMP-142) for the PFS clean liquor air coolers (see subsection 4.1.5.1). Design parameters for the clean liquor pumps are listed in tables 4.32 through 4.34 For TOCDF and UMCDF, which have 2 LIC furnaces and dedicated PASs, the tag number and P&ID for LIC #1 are listed in Table 4.33 with the LIC #2 tag number and P&ID enclosed in brackets.

Table 4.32 DFS Clean Liquor Pump Design Parameters

	ANCDF	PBCDF	TOCDF	UMCDF
Quantity	2	2	2	2
Tag #(s)	PFS-PUMP-138 PFS-PUMP-139	PFS-PUMP-138 PFS-PUMP-139	PAS-PUMP-108 PAS-PUMP-109	PFS-PUMP-138 PFS-PUMP-139
Pump Type	Motor-Driven Centrifugal	Motor-Driven Centrifugal	Motor-Driven Centrifugal	Motor-Driven Centrifugal
Rated Flow/ Δ Pressure	2422 gpm ΔP 77 psi	2313 gpm ΔP 73 psi	2405 gpm ΔP 47 psi	2420 gpm ΔP 76 psi
Motor Power	150 hp	*150* hp	100 hp	150 hp
P&IDs	AN-6-D-506	PB-6-D-506	EG-6-D-506	UM-6-D-506

Table 4.33 LIC Clean Liquor Pump Design Parameters

	ANCDF	PBCDF	TOCDF	UMCDF
Quantity	2	2	4	4
Tag #(s)	PFS-PUMP-234 PFS-PUMP-235	PFS-PUMP-134 PFS-PUMP-135	PAS-PUMP-113 PAS-PUMP-114 [PAS-PUMP-213] [PAS-PUMP-214]	PFS-PUMP-134 PFS-PUMP-135 [PFS-PUMP-234] [PFS-PUMP-235]
Pump Type	Motor-Driven Centrifugal	Motor-Driven Centrifugal	Motor-Driven Centrifugal	Motor-Driven Centrifugal
Rated Flow/ Δ Pressure	854 gpm ΔP 84 psi	876 gpm ΔP 102 psi	859 gpm ΔP 48 psi	865 gpm ΔP 87 psi
Motor Power	*100* hp	*100* hp	40 hp	*100* hp[a]
P&IDs	AN-6-D-511	PB-6-D-501	EG-6-D-501 [EG-6-D-511]	UM-6-D-501 [UM-6-D-511]

[a] *Motor power based on vendor-supplied equipment. UM-6-D-501 & -511 list the motor power as 75 hp. UMAP477PAS has been approved to revise design documents.*

Table 4.34 MPF Clean Liquor Pump Design Parameters

	ANCDF	PBCDF	TOCDF	UMCDF
Quantity	2	2	2	2
Tag #(s)	PFS-PUMP-136 PFS-PUMP-137	PFS-PUMP-136 PFS-PUMP-137	PAS-PUMP-104 PAS-PUMP-105	PFS-PUMP-136 PFS-PUMP-137
Pump Type	Motor-Driven Centrifugal	Motor-Driven Centrifugal	Motor-Driven Centrifugal	Motor-Driven Centrifugal
Rated Flow/ Δ Pressure	887 gpm ΔP 89 psi	882 gpm ΔP 94 psi	1070 gpm ΔP 47 psi	890 gpm ΔP 90 psi
Motor Power	75 hp	*100* hp	40 hp	*100* hp[a]
P&IDs	AN-6-D-504	PB-6-D-504	EG-6-D-504	UM-6-D-504

[a] *Motor power based on vendor-supplied equipment. UM-6-D-501 & -511 list the motor power as 75 hp. UMAP477PAS has been approved to revise the design documents.*

4.1.7.3 Mist Eliminator Water Return Pump

The mist eliminator water return pump transfers liquid that collects in the bottom of the mist eliminator vessel to the scrubber tower sump to maintain the operational water level in the mist eliminator vessel. The PAS for each furnace has one mist eliminator water return pump. When a spare mist eliminator vessel is used, the mist eliminator water return pump for the furnace system is aligned with the spare mist eliminator vessel. Design parameters

for the mist eliminator water return pumps are listed in tables 4.35 through 4.37. For TOCDF and UMCDF, which have 2 LIC furnaces and dedicated PASs, the tag number and P&ID for LIC #1 are listed in Table 4.36 with the LIC #2 tag number and P&ID enclosed in brackets.

Table 4.35 DFS Mist Eliminator[a] Water Return Pump Design Parameters

	ANCDF	PBCDF	TOCDF	UMCDF
Quantity	1	1	1	1
Tag #(s)	PAS-PUMP-138	PAS-PUMP-138	PAS-PUMP-138	PAS-PUMP-138
Pump Type	Motor-Driven Centrifugal	Motor-Driven Centrifugal	Motor-Driven Centrifugal	Motor-Driven Centrifugal
Rated Flow/ Δ Pressure	24 gpm ΔP 18 psi	24 gpm ΔP 19.5 psi	24 gpm ΔP 12 psi	24 gpm ΔP 18 psi
Motor Power	1.5 hp	1.5 hp	1 hp	1.5 hp
P&IDs	AN-6-D-508	PB-6-D-508	TE-6-D-508	UM-6-D-508

[a] Referred to as a demister water return pump at TOCDF.

Table 4.36 LIC Mist Eliminator[a] Water Return Pump Design Parameters

	ANCDF	PBCDF	TOCDF	UMCDF
Quantity	1	1	2	2
Tag #(s)	PAS-PUMP-222	PAS-PUMP-136	PAS-PUMP-136 [PAS-PUMP-222]	PAS-PUMP-136 [PAS-PUMP-222]
Pump Type	Motor-Driven Centrifugal	Motor-Driven Centrifugal	Motor-Driven Centrifugal	Motor-Driven Centrifugal
Rated Flow/ Δ Pressure	24 gpm ΔP 18 psi	24 gpm ΔP 19.5 psi	24 gpm ΔP 12 psi	24 gpm ΔP 18 psi
Motor Power	1.5 hp	1.5 hp	1 hp	1.5 hp
P&IDs	AN-6-D-512	PB-6-D-502	TE-6-D-502 [TE-6-D-512]	UM-6-D-502 [UM-6-D-512]

[a] Referred to as a demister water return pump at TOCDF.

Table 4.37 MPF Mist Eliminator[a] Water Return Pump Design Parameters

	ANCDF	PBCDF	TOCDF	UMCDF
Quantity	1	1	1	1
Tag #(s)	PAS-PUMP-137	PAS-PUMP-137	PAS-PUMP-137	PAS-PUMP-137
Pump Type	Motor-Driven Centrifugal	Motor-Driven Centrifugal	Motor-Driven Centrifugal	Motor-Driven Centrifugal
Rated Flow/ Δ Pressure	24 gpm ΔP 18 psi	24 gpm ΔP 19.5 psi	24 gpm ΔP 12 psi	24 gpm ΔP 18 psi
Motor Power	1.5 hp	1.5 hp	1 hp	1.5 hp
P&IDs	AN-6-D-505	PB-6-D-505	TE-6-D-505	UM-6-D-505

[a] Referred to as a demister water return pump at TOCDF.

4.1.7.4 Mist Eliminator Recirculation Pump

At ANCDF and UMCDF, the mist eliminator candle filters can be washed remotely with process water or 18% caustic using either PAS-PUMP-131 or 132 (see FAWB Note B-10). Design parameters for the mist eliminator recirculation pumps are listed in table 4.38.

Table 4.38 Mist Eliminator Recirculation Pump[a] Design Parameters

	ANCDF	UMCDF
Quantity	1	1
Tag #(s)	PAS-PUMP-131 [PAS-PUMP-132]	PAS-PUMP-131 [PAS-PUMP-132]
Pump Type	Motor-Driven Centrifugal	Motor-Driven Centrifugal
Rated Flow/ Δ Pressure	24 gpm ΔP 48 psi	24 gpm ΔP 48 psi
Motor Power	5 hp	5 hp
P&IDs	AN-6-D-502 [AN-6-D-505]	UM-6-D-502 [UM-6-D-505]

[a] Not present at PBCDF or TOCDF.

4.1.7.5 Recovered Water Feed Pump

The recovered water feed pump is used to transfer water from the recovered water tank to supplement process water to the any of the quench towers, except at TOCDF where recovered water can be used to supplement the LIC quench brine systems only. Design parameters for the recovered water feed pump are listed in table 4.39.

Table 4.39 Recovered Water Feed Pump Design Parameters

	ANCDF	PBCDF	TOCDF	UMCDF
Quantity	2	2	2	2
Tag #(s)	PAS-PUMP-134 PAS-PUMP-135	PAS-PUMP-134 PAS-PUMP-135	PAS-PUMP-134 PAS-PUMP-135	PAS-PUMP-134 PAS-PUMP-135
Pump Type	Motor-Driven Centrifugal	Motor-Driven Centrifugal	Motor-Driven Centrifugal	Motor-Driven Centrifugal
Rated Flow/ Δ Pressure	53 gpm ΔP 118 psi	53 gpm ΔP 118 psi	53 gpm ΔP 118 psi	53 gpm ΔP 118 psi
Motor Power	15 hp	15 hp	15 hp	15 hp
P&IDs	AN-6-D-510	PB-6-D-510	TE-6-D-510	UM-6-D-510

4.1.7.6 PAS Area Sump Pump

The PAS area sump pump is used at all sites to transfer waste water from the PAS area sump to the recovered water tank or to a tanker truck (TOCDF only). Design parameters for the PAS area sump pump are listed in table 4.40.

Table 4.40 PAS Area Sump Pump Design Parameters

	ANCDF	PBCDF	TOCDF	UMCDF
Quantity	1	1	1	1
Tag #(s)	PAS-PUMP-110	PAS-PUMP-110	PAS-PUMP-110	PAS-PUMP-110
Pump Type	Air-operated Diaphragm	Air-operated Diaphragm	Air-operated Diaphragm	Air-operated Diaphragm
Rated Flow/ Δ Pressure	110 gpm ΔP 19 psi	110 gpm ΔP 19 psi	110 gpm ΔP 19 psi	110 gpm ΔP 19 psi
P&IDs	AN-6-D-508	PB-6-D-508	TE-6-D-508	UM-6-D-508

4.1.8 Recovered Water Tank

The recovered water tank collects waste water from various plant sources (see subsection 3.2.10) to supply make-up water to the quench brine loop. Design parameters for the recovered water tank are listed in Table 4.41.

Table 4.41 Recovered Water Tank Design Parameters

	ANCDF	PBCDF	TOCDF	UMCDF
Quantity	1	1	1	1
Tag #(s)	PAS-TANK-103	PAS-TANK-103	PAS-TANK-103	PAS-TANK-103
Size	12’0” Diameter 15’0” Height	12’0” Diameter 15’0” Height	12’0” Diameter 15’0” Height	12’0” Diameter 15’0” Height
Capacity	10,000 gallon	10,000 gallon	10,000 gallon	10,000 gallon
Design Pressure Temperature	Atmospheric 120°F	Atmospheric 120°F	Atmospheric 120°F	Atmospheric 120°F
Construction	Carbon Steel, Coal Tar Epoxy Lining	Carbon Steel, Coal Tar Epoxy Lining	Carbon Steel, Coal Tar Epoxy Lining	Carbon Steel, Coal Tar Epoxy Lining
P&IDs	AN-6-D-510	PB-6-D-510	TE-6-D-510	UM-6-D-510

4.1.9 Common Stack

The common stack provides the release point for the cleaned and cooled exhaust gases from the PAS/PFSs. Design parameters for the common stack are listed in table 4.42.

Table 4.42 Common Stack Design Parameters

	ANCDF	PBCDF	TOCDF	UMCDF
Quantity	1	1	1	1
Tag #(s)	PAS-STAK-102	PAS-STAK-102	PAS-STAK-102	PAS-STAK-102
Size	140’ Height 5’0” ID at top 9’6” ID at bottom	160’ Height 5’0” ID at top *12’0”* ID at bottom[a]	100’ Height 5’0” ID at top 9’6” ID at bottom	100’ Height 5’0” ID at top 9’6” ID at bottom
Construction	Carbon Steel	Carbon Steel	Carbon Steel	Carbon Steel
P&IDs	AN-6-D-507	PB-6-D-507	TE-6-D-507	UM-6-D-507

[a] *PBCDF bottom stack diameter based on PB-6-S-540 Rev.2 and field verification. PB-6-D-507 shows a bottom ID of 9’6”. PBCDF has prepared an RFI to resolve the discrepancy.*

4.2 EQUIPMENT POWER SOURCES

Table 4.43 lists the equipment power sources for the major equipment used in the PAS/PFS systems based on the source documentation listed in Appendix H. Power sources are characterized as either critical, essential or utility. Critical loads are powered by the UPS panelboards and do not experience an interruption in power if offsite power is lost. Essential loads are required for safe shutdown of the facility, but can tolerate an interruption in power while being loaded on an onsite emergency diesel generator (EDG). Utility loads are not required if offsite power is lost and are not powered by the onsite EDG. Only motive power sources are listed in the table; instrumentation and control power sources are not listed. In addition, hydraulically and pneumatically powered, and non-powered equipment are not included in the table.

Table 4.43 PAS/PFS Equipment Power Sources

Equipment Tag	Description	Site(s)	Power Source	Power Type
PAS-BLOW-102	MPF Exhaust Blower (motor A)	AN/PB/UM	SPS-SWGR-105	Essential
		TE	PPS-SWGR-101	Essential[a]
	MPF Exhaust Blower (motor B)	AN/PB/UM	SPS-SWGR-106	Essential
		TE	PPS-SWGR-101	Essential[a]
PAS-BLOW-103	DFS Exhaust Blower (motor A)	AN/PB/UM	SPS-SWGR-105	Essential
		TE	PPS-SWGR-102	Essential[a]
	DFS Exhaust Blower (motor B)	AN/PB/UM	SPS-SWGR-106	Essential
		TE	PPS-SWGR-102	Essential[a]
PAS-BLOW-104	LIC (No.1 at TE and UM) Exhaust Blower (motor A)	TE	PPS-SWGR-101	Essential[a]
		PB/UM	SPS-SWGR-105	Essential
	LIC (No.1 at TE and UM) Exhaust Blower (motor B)	TE	PPS-SWGR-101	Essential[a]
		PB/UM	SPS-SWGR-106	Essential
PAS-BLOW-106	MPF Emergency Exhaust Blower	TE	SPS-MCC-112	Essential
PAS-BLOW-107	DFS Emergency Exhaust Blower	TE	SPS-MCC-112	Essential
PAS-BLOW-204	LIC (No.2 at TE and UM) Exhaust Blower (motor A)	AN/UM	SPS-SWGR-105	Essential
		TE	PPS-SWGR-102	Essential[a]
	LIC (No.2 at TE and UM) Exhaust Blower (motor B)	AN/UM	SPS-SWGR-106	Essential
		TE	PPS-SWGR-102	Essential[a]
PAS-MOTS-102A	MPF Exhaust Blower Lube Oil Pump 102A	TE	SPS-MCC-112	Utility

Table 4.43 (Cont'd)

Equipment Tag	Description	Site(s)	Power Source	Power Type
PAS-MOTS-102B	MPF Exhaust Blower Lube Oil Pump 102B	TE	SPS-MCC-112	Utility
PAS-MOTS-103A	DFS Exhaust Blower Lube Oil Pump 103A	TE	SPS-MCC-112	Utility
PAS-MOTS-103B	DFS Exhaust Blower Lube Oil Pump 103B	TE	SPS-MCC-112	Utility
PAS-MOTS-104A	LIC No 1 Exhaust Blower Lube Oil Pump 104A	TE	SPS-MCC-111	Utility
PAS-MOTS-104B	LIC No 1 Exhaust Blower Lube Oil Pump 104B	TE	SPS-MCC-111	Utility
PAS-MOTS-204A	LIC No 2 Exhaust Blower Lube Oil Pump 204A	TE	SPS-MCC-112	Utility
PAS-MOTS-204B	LIC No 2 Exhaust Blower Lube Oil Pump 204B	TE	SPS-MCC-112	Utility
PAS-MOTS-9101	MPF Exhaust Blower Lube Oil Fan 9101	TE	SPS-MCC-112	Utility
PAS-MOTS-9102	DFS Exhaust Blower Lube Oil Fan 9102	TE	SPS-MCC-112	Utility
PAS-MOTS-9103	DFS Exhaust Blower Lube Oil Fan 9103	TE	SPS-MCC-111	Utility
PAS-MOTS-9104	LIC No 2 Exhaust Blower Lube Oil Fan 9104	TE	SPS-MCC-112	Utility
PAS-PUMP-102	MPF Quench Brine Pump	AN/PB/TE/ UM	SPS-MCC-111	Essential
PAS-PUMP-103	MPF Quench Brine Pump	AN/PB/TE/ UM	SPS-MCC-112	Essential
PAS-PUMP-104	MPF Clean Liquor Pump	TE	SPS-MCC-111	*Essential*
PAS-PUMP-105	MPF Clean Liquor Pump	TE	SPS-MCC-112	*Essential*
PAS-PUMP-106	DFS Quench Brine Pump	AN/PB/TE/ UM	SPS-MCC-111	Essential
PAS-PUMP-107	DFS Quench Brine Pump	AN/PB/TE/ UM	SPS-MCC-112	Essential
PAS-PUMP-108	DFS Clean Liquor Pump	TE	SPS-MCC-111	*Essential*
PAS-PUMP-109	DFS Clean Liquor Pump	TE	SPS-MCC-112	*Essential*
PAS-PUMP-111	LIC (No.1 at TE and UM) Quench Brine Pump	PB/TE/UM	SPS-MCC-111	Essential
PAS-PUMP-112	LIC (No.1 at TE and UM) Quench Brine Pump	PB/TE/UM	SPS-MCC-112	Essential

Table 4.43 (Cont'd)

Equipment Tag	Description	Site(s)	Power Source	Power Type
PAS-PUMP-113	LIC (No.1 at TE) Clean Liquor Pump	TE	SPS-MCC-111	Utility
PAS-PUMP-114	LIC (No.1 at TE) Clean Liquor Pump	TE	SPS-MCC-112	Utility
PAS-PUMP-131	Mist Eliminator Recirculation Pump	AN/UM	NA	Utility
PAS-PUMP-132	Mist Eliminator Recirculation Pump	AN/UM	NA	Utility
PAS-PUMP-134	Recovered Water Feed Pump	AN/PB/TE/ UM	SPS-MCC-111	Utility
PAS-PUMP-135	Recovered Water Feed Pump	*AN/PB/TE/ UM*	SPS-MCC-*112*	Utility
PAS-PUMP-136	LIC (No.1 at TE and UM) Demister/Mist Eliminator Water Return Pump	PB/TE/UM	SPS-MCC-112	Utility
PAS-PUMP-137	MPF Demister/Mist Eliminator Water Return Pump	AN/PB/TE/ UM	SPS-MCC-111	Utility
PAS-PUMP-138	DFS Demister/Mist Eliminator Water Return Pump	AN/PB/TE/ UM	SPS-MCC-111	Utility
PAS-PUMP-211	LIC (No.2 at TE and UM) Quench Brine Pump	AN/TE/UM	SPS-MCC-111	Essential
PAS-PUMP-212	LIC (No.2 at TE and UM) Quench Brine Pump	AN/TE/UM	SPS-MCC-112	Essential
PAS-PUMP-213	LIC (No.2 at TE) Clean Liquor Pump	AN/TE	SPS-MCC-111	Utility
PAS-PUMP-214	LIC (No.2 at TE) Clean Liquor Pump	AN/TE	SPS-MCC-112	Utility
PAS-PUMP-222	LIC (No.2 at TE and UM) Demister/Mist Eliminator Water Return Pump	AN/TE/UM	SPS-MCC-112	Utility
PFS-BLOW-101	LIC (No.1 at UM) PFS Gas Reheater Blower	PB/UM	PFS-DPNL-102	Essential
PFS-BLOW-102	MPF PFS Gas Reheater Blower	AN/PB/UM	PFS-DPNL-102	Essential
PFS-BLOW-103	DFS PFS Gas Reheater Blower	AN/PB/UM	PFS-DPNL-102	Essential
PFS-BLOW-201	LIC (No.2 at UM) PFS Gas Reheater Blower	AN/UM	PFS-DPNL-102	Essential
PFS-COOL-113A[b]	LIC (No.1 at UM) Clean Liquor Air Cooler	PB/UM	SPS-SWBD-103	Essential

Table 4.43 (Cont'd)

Equipment Tag	Description	Site(s)	Power Source	Power Type
PFS-COOL-113B[b]	LIC (No.1 at UM) Clean Liquor Air Cooler	PB/UM	SPS-SWBD-104	Essential
PFS-COOL-114A[b]	MPF Clean Liquor Air Cooler	AN/PB/UM	SPS-SWBD-103	Essential
PFS-COOL-114B[b]	MPF Clean Liquor Air Cooler	AN/PB/UM	SPS-SWBD-104	Essential
PFS-COOL-115A[b]	DFS Clean Liquor Air Cooler	AN/PB/UM	SPS-SWBD-103	Essential
PFS-COOL-115B[b]	DFS Clean Liquor Air Cooler	AN/PB/UM	SPS-SWBD-104	Essential
PFS-COOL-115C[b]	DFS Clean Liquor Air Air Cooler	AN/PB/UM	SPS-SWBD-103	Essential
PFS-COOL-115D[b]	DFS Clean Liquor Air Cooler	AN/PB/UM	SPS-SWBD-104	Essential
PFS-COOL-213A[b]	LIC (No.2 at UM) Clean Liquor Air Cooler	AN/UM	SPS-SWBD-103	Essential
PFS-COOL-213B[b]	LIC (No.2 at UM) Clean Liquor Air Cooler	AN/UM	SPS-SWBD-104	Essential
PFS-PUMP-136	MPF Clean Liquor Pump	AN/PB/UM	SPS-MCC-111	Essential
PFS-PUMP-137	MPF Clean Liquor Pump	AN/PB/UM	SPS-MCC-112	Essential
PFS-PUMP-138	DFS Clean Liquor Pump	AN/PB/UM	SPS-MCC-111	Essential
PFS-PUMP-139	DFS Clean Liquor Pump	AN/PB/UM	SPS-MCC-112	Essential
PFS-PUMP-134	LIC (No.1 at UM) Clean Liquor Pump	PB/UM	SPS-MCC-111	Essential
PFS-PUMP-135	LIC (No.1 at UM) Clean Liquor Pump	PB/UM	SPS-MCC-112	Essential
PFS-PUMP-234	LIC (No.2 at UM) Clean Liquor Pump	AN/UM	SPS-MCC-111	Essential
PFS-PUMP-235	LIC (No.2 at UM) Clean Liquor Pump	AN/UM	SPS-MCC-112	Essential

[a] Essential load that is not automatically loaded on the EDG.

[b] *Each cooler has two ASD motors.*

APPENDIX A

Acronyms and Abbreviations

The acronyms and abbreviations listed below are common for all of the programmatic process FAWBs:

A&I	alarm and interlock matrix
AASS	automatic agent sampling system
ABCDF	Aberdeen Chemical Agent Disposal Facility
AC	alternating current
ACAMS	automatic continuous air monitoring system
acfm	actual cubic foot per minute
ACS	agent collection system
ACSWS	acid and caustic storage and wash system
ADC	air dilution controller
AgF	silver fluoride
AHT	agent holding tank
AHU	air handling unit
AMC	Army Materiel Command
ANAD	Anniston Army Depot (Alabama)
ANCDF	Anniston Chemical Agent Disposal Facility
ANSI	American National Standards Institute
AQS	agent quantification system
AR	Army Regulation
ASA	automatic submerged arc
ASC	allowable stack concentration
ASD	adjustable-speed drive
ASME	American Society of Mechanical Engineers
ASTM	American Society for Testing and Materials
AWS	acid wash system
AWFCO	automatic waste feed cutoff
BCHS	bulk container handling system
BCS	bulk chemical storage
BDS	bulk drain station
BGCDF	Blue Grass Chemical Agent Disposal Facility
BLAD	blast load attenuation duct
BMS	burner management system
BPS	burster punch station (MIN)
BRA	brine reduction area
BRS	burster removal station (PMD)
BSA	buffer storage area
BSR	burster size reduction machine
Btu	British thermal unit
°C	degrees Celsius
CAMDS	Chemical Agent Munition Disposal System
CAB	combustion air blower

CAL	chemical assessment laboratory
CAS	compressed air system
CBR	chemical, biological, and radiologic al (filter)
CCB	configuration control board
CCS	central control system
CCTV	closed-circuit television
CDS	central decontamination supply
CDSS	central decontamination supply system
CDTF	Chemical Demilitarization Training Facility
CEHNC	U.S. Army Engineering & Support Center, Huntsville.
CEMS	continuous emission monitoring system
CFR	Code of Federal Regulations
CGA	Compressed Gas Association
CHB	container handling building
CHWS	chilled water supply
CO	carbon monoxide (monitors/analyzers)
COM	communications system
CON	control room
COR	munitions corridor
CPA	client-Parsons authorization
CRO	control room operator
CRT	cathode ray tube
CS	crimp station (PMD)
CSS	campaign select screen
CSD	Chemical Stockpile Disposal (Project)
CV	control variable
CWC	Chemical Weapons Convention
CWS	chilled water supply
DAAMS	depot area air monitoring system
db	dry bulb
DC	direct current
DCD	Deseret Chemical Depot
DDESB	Department of Defense Explosives Safety Board
decon	decontamination (solution)
demil	demilitarization
DFS	deactivation furnace system
DICI	digital intercontroller communication input
DICO	digital intercontroller communication output
DMS	door monitoring system
DPE	demilitarization protective ensemble (suit)
DSA	DPE support area
dscf	dry standard cubic foot
DSIC	design and systems integration contractor
DUN	dunnage incinerator
E&M	engineering and maintenance
E-stop	emergency stop
EAC	equipment acquisition contractor
ECF	entry control facility
ECP	engineering change proposal
ECL	engineering control level
ECR	explosive containment room

ECV	explosive containment vestibule
EDG	emergency diesel generator
EHM	equipment hydraulic module
EIC	equipment installation contractor
EPS	emergency power system
ETL	extreme temperature limit
°F	degrees Fahrenheit
FAWB	functional analysis workbook
FDLL	field design lessons learned (program)
FDPS	fire detection and prevention system
FEET	FAWB evolvement/evaluation team
FEM	fire extinguishing medium
FIFO	first-in-first-out
FIL	activated carbon and HEPA filter
FPD	flame photometric detector
fpm	feet per minute
FSSS	flame safety shutdown system
ft	feet
GA	general arrangement; nerve agent ethyl N-dimethylphosphoramidocyanidate ($C_5H_{11}N_2O_2P$)
gal	gallon
GB	nerve agent Sarin, isopropyl methyl phosphonofluoridate ($C_4H_{10}FO_2P$)
GC	gas chromatograph
GEN	emergency generator
GFE	government-furnished equipment
GLD	gross level detector
GPD	gas plasma display
gpm	gallons per minute
gr	grain
H	blister agent mustard, made by the Levinstein process, Bis(2-chloroethyl) sulfide or 2,2'-dichlorodiethyl sulfide ($C_4H_8Cl_2S_{1.5}$ [empirical formula])
H_3PO_4	orthophosphoric acid
HCl	hydrochloric acid
HD	blister agent distilled mustard, Bis(2-chloroethyl) sulfide or 2,2'-dichlorodiethyl sulfide ($C_4H_8Cl_2S$)
HDC	heated discharge conveyor
HDV	hydraulic directional control valve
HEPA	high-efficiency particulate air (filter)
HLE	high-level exposure
HOA	hand-off-auto
hp	horsepower
hr	hour
HRA	health risk assessment
HT	60% by weight blister agent distilled mustard and 40% agent T [Bis[2(2-chloroethylthio)ethyl] ether]
HVAC	heating, ventilating, and air-conditioning
HVC	heating, ventilating, and cooling
HYD	hydraulic power
HYPU	hydraulic power unit
HYVM	hydraulic control valve manifold
I/O	input/output

I-lock	interlock
IAS	instrument air system
icfm	inlet cubic foot per minute (acfm at the inlet)
ICS	instrumentation and control system
ID	induced draft
	inside diameter
IDLH	immediately dangerous to life and health
IGS	inertial gas sampling
in.	inch
in. wc.	inches water column
IR	infrared
ISO	International Standards Organization
JACADS	Johnston Atoll Chemical Agent Disposal System
kW	kilowatt
L	Lewisite (blister agent)
LAB	laboratory
lb	pound
lb/hr	pounds per hour
LCO	limiting condition of operation
ln	line
LIC	liquid incinerator
LIFO	last-in-first-out
LIT	level-indicating transmitter
LOQ	limit of quantification
LOR	local-off-remote
LPG	liquefied petroleum gas
LQCP	laboratory quality control plan
LR	local-remote
LSB	LSS bottle filling system
LSS	life support system
LVS	low volume sampler
mA	milliamperes
MCC	motor control center
MCP	monitoring concept plan
MDB	munitions demilitarization building
MDM	multipurpose demilitarization machine
MEL	master equipment list
MER	mechanical equipment room
mg/m^3	milligrams per cubic meter
MIG	mine glovebox
MIN	mine machine
MMS	mine and munitions system
MPB	munitions processing bay
MPF	metal parts furnace
MPL	multiposition loader
	maximum permissible limit (for DPE)
MPRS	miscellaneous parts removal station (PMD)
MSB	monitor support building
MSS	munition sampling system
NaOCl	sodium hypochlorite
NaOH	sodium hydroxide

NCRS	nose closure removal station (PMD)
NEMA	National Electrical Manufacturers Association
NEPA	National Environmental Policy Act
NFPA	National Fire Protection Association
NG	natural gas
NRT	near real time
O&M	operations and maintenance
OBV	observation corridor
ONC	onsite container
OS	orientation station (MIN)
OSHA	Occupational Safety and Health Administration
OVT	operational verification testing
P&A	precision and accuracy
P&ID	piping and instrument diagram
PA	public address
PAS	pollution abatement system
PBA	Pine Bluff Arsenal
PBCDF	Pine Bluff Chemical Agent Disposal Facility
PCS	primary cooling system
PCT	preconcentrator tube
PDAR(S)	process data acquisition and recording system
PDE	projectile deformation equipment
PDIT	pressure differential indicator transmitter
PDS	pull and drain station (MDM)
	punch and drain station (MIN)
PFD	process flow diagram
PFS	PAS filter system
pH	potential of hydrogen (a measure of acidity or alkalinity)
PHS	projectile handling system
PID	proportional integral derivative
pig	overpacked shipping container
PKPL	pick-and-place machine (also PPL)
PLA	plant air system
PLC	programmable logic controller
PLL	programmatic lessons learned (program)
PLS	proximity limit sensor/switch
PMB	personnel and maintenance building
PMCD	Program Manager for Chemical Demilitarization (formerly PEO-PM Cml Demil)
PMCSD	Project Manager for Chemical Stockpile Disposal
PMD	projectile/mortar disassembly (machine)
PML	personnel, maintenance, and laundry (complex or building)
POT	potable water
PPL	pick-and-place machine
PPS	primary power system
PQAP	Participant Quality Assurance Plan
PRW	process water
PSB	process support building
psig	pounds per square inch, gauge
PSV	pressure safety valve
PUB	process and utility building
PUDA	Pueblo Depot Activity (Colorado)

PWR	power systems (unit substation, uninterruptible power supply, battery rooms, and emergency generator)
RCRA	Resource Conservation and Recovery Act
RDS	rocket drain station
RDTE	research, development, testing, and evaluation
RFI	Request for Information
RHA	residue handling area
RHS	rocket handling system
rpm	revolutions per minute
rps	revolutions per second
RSM	rocket shear machine
RSS	rocket shear station
SC	systems contractor
SCBA	self-contained breathing apparatus
scf	standard cubic foot
scfh	standard cubic feet per hour
scfm	standard cubic feet per minute
SCW	secondary cooling water
SCT	systems contractor for training
SDS	spent decon system
sg	specific gravity
SGS	steam generation system
SOP	standing operating procedure
SPS	secondary power system
SRS	slag removal system
TBD	to be determined
TCE	treaty compliance equipment
TEAD	Tooele Army Depot (Utah)
TIP	tray information packet
TM	Army Technical Manual
TMA	toxic maintenance area
TNT	trinitrotoluene (explosive)
TOCDF	Tooele Chemical Agent Disposal Facility
TOX	toxic cubicle
TSCA	Toxic Substances Control Act
TSHS	toxic storage and handling system
TSO	Tight shutoff
TWA	time-weighted average
UE&C	United Engineers and Constructors
UMCDF	Umatilla Chemical Agent Disposal Facility
UPA	unpack area
UPS	uninterruptible power supply
UV	ultraviolet
VCR	video cassette recorder
VX	nerve agent, O-ethyl S-(2-diisopropylaminoethyl) methylphosphonothiolate ($C_{11}H_{26}NO_2PS$)
wc	water column
WTS	water treatment system
XXX	3X level of decontamination
XXXXX	5X level of decontamination (minimum of 1000ºF for 15 minutes)
Z	general designation for monitoring hazard level

APPENDIX B

FAWB Notes

Appendix B contains notes to expand upon the descriptions contained in the text of the FAWB. The notes include related experiences at the Johnston Atoll Chemical Agent Disposal System (JACADS).

B-1 Per discussions held during the comment resolution matrix meeting for the HVAC FAWB on 9-10-98, the programmatic process FAWBs are being prepared under the assumption that the DUN, DUN PAS and DUN PFS (at ANCDF) systems will not be used for processing at *any of the four sites*. *Therefore, a* programmatic process FAWB for the DUN/DUN PAS/PFS is not being developed. Handling *and disposal* of dunnage *are* considered site-specific activit*ies* that ha*ve* not yet been determined. *PBCDF deleted the DUN from the design by PBAC1000DUN. The DUN is installed at TOCDF and remains in the design at ANCDF. The RCRA and design package for the UMCDF DUN, DUN PAS, and DUN PFS were incorporated under post-construction design update package PC2.*

B-2 Per discussions held during the comment resolution matrix meeting for the PAS FAWB on 11-10-98, the programmatic process FAWBs for the PAS and PFS were combined into a single PAS/PFS FAWB that applies to all four sites. Since TOCDF will not have a PFS, discussions related to the PFS are applicable to ANCDF, PBCDF and UMCDF only (see FAWB Note B-4 below).

B-3 The acid/caustic storage and wash system is no longer used at TOCDF and has been removed from the ANCDF, UMCDF, and PBCDF site designs by ECPs ANAC343PAS, R1, UMAC160PAS, R1, and PBAC340PAS, respectively.

B-4 The PFS was incorporated into the ANCDF, PBCDF, and UMCDF designs under ECPs ANAC459PAS, PBAC406PAS and UMAC0193PAS, respectively. TOCDF will not have a PFS. Since the DUN PFS is unique to the DUN, it is considered part of the DUN system (see FAWB Note B-1).

B-5 At TOCDF, the DFS afterburner temperature controller (16-TIC-092) setpoint is 2150ºF for all munitions. *At the Jan 2001 ANCDF DFS review meeting, ANCDF stated that they will run the afterburner at 2000ºF for all munitions. UMCDF has stated that they will run the DFS afterburner at 2200ºF for rockets and 2000ºF for all other munitions. Note that the design documentation for the follow-on sites may not match these values. It is planned to have an operational configuration similar to TOCDF implemented at PBCDF.*

B-6 In June 1998, TOCDF indefinitely suspended BRA operations, which includes operation of the SGS boilers. Therefore, TOCDF does not have blowdown from

these boilers as an interface with the PAS system. The TOCDF BRA equipment is currently in layup, and could be reactivated if brine shipment offsite becomes cost prohibitive or if operation of the BRA becomes necessary to meet regulatory requirements.

B-7 TOCDF added a high-high (TAHH) and a high-high-high (TAHHH) alarm based on the temperature transmitter output in the quench tower exhaust duct for all PASs. Activation of the TAHH initiates emergency quench water. Activation of TAHHH initiates emergency quench water and initiates a furnace shutdown. These additions were made due to the slow response time of the existing high-high and high-high-high temperature switches. The temperature switches remain in place as a backup to the transmitter.

ANCDF, PBCDF, and UMCDF will have temperature switches with much faster response times and will not have the transmitter high-high and high-high-high alarms. *Emergency quench water spray is initiated by the TSHH, and a furnace shutdown is initiated by the TSHHH. The DSIC has recommended modifying the emergency quench valve control logic to have the valve open on the high-high-high switch and remain open until any one of the following occurs: 1) The temperature drops to below the TSHH setpoint, 2) The quench tower level reaches LAHH, or 3) a time delay expires (the time delay should be sufficient to prevent quench water addition from flooding the furnace). The changes would provide additional protection against overfilling the quench tower and flooding the furnace. The recommendations are under review by each of the sites.*

B-8 At TOCDF, the emergency quench water to all four furnace PAS quench towers includes a test for 15 seconds between 04:45 and 05:30 anytime that the furnace afterburner is firing and the temperature is at least 1000°F (ref: ECP TEMP-2077-PAS R1). The design documentation (i.e. note on P&IDs) for the follow-on sites does not match the TOCDF test frequency and duration, however, it is planned to have the operational configuration at TOCDF implemented at the follow-on sites. *Based on discussions at the Oct 2000 ANCDF PAS/PFS review meeting, PMCD will direct Parsons to prepare an ECP revising the follow-on site designs.*

B-9 In the *April 2001* TOCDF control code, *DFS* quench brine pump low seal water flow for greater than 5 seconds shuts down the primary pump, but does not cause a switchover from the primary pump to the standby pump. *In addition, even if selected as the standby pump, a TOCDF DFS quench brine pump will still shutdown on low seal water flow. For all ANCDF quench brine pumps and all other TOCDF quench brine pumps, loss of seal water flow to the primary pump will cause a switchover to the standby, and loss of seal water flow to the standby will generate an alarm only. For all quench brine and clean liquor pumps at PFS sites, the seal water alarm timer is bypassed during an essential power restart until after the process water pump(s) have restarted.*

B-10 Although the mist eliminator empty-out pumps and recirculation pumps were considered part of the acid/caustic storage and wash system which was removed from the ANCDF, UMCDF, and PBCDF site designs (see FAWB Note B-3), the mist eliminator recirculation pumps (PAS-PUMP-131 and -132) remain in the design at ANCDF and UMCDF for use in supplying process water or 18% caustic to clean the candle filter elements.

B-11 During normal operation, experience at Johnston Atoll Chemical Agent Disposal System (JACADS) and Chemical Agent Munition Disposal System (CAMDS) indicated that a significant amount of liquid builds up in the bottom of the mist eliminator. Therefore, mist eliminator return pumps were added to recover this liquid and return it to the quench brine recirculation loop

B-12 Design documentation for ANCDF, PBCDF, and UMCDF indicates that there are two modes of automatic operation for furnace pressure control: 1) modulating the ID fan speed with the ID fan inlet damper at a preset position, or 2) modulating the ID fan inlet damper position with the ID fan at a preset speed. After discussions with the DSIC and EIC, it was decided that since speed control of the ID fans is the desired pressure control mode, furnace pressure control by modulating the ID fan inlet damper position would not be available as an automatic control mode. If furnace pressure control in this mode is desired, the operator can place the system in MANUAL, set the ID fan speed, and manually position the ID fan inlet damper to maintain the desired primary chamber pressure.

B-13 After RCRA permits had been developed and submitted for ANCDF, PBCDF, and UMCDF, modifications were made to the CEMS configuration at TOCDF. The PMCSD Acquisition Team advised the EIC to assume that the CEMS configuration for furnace exhaust gas monitoring at ANCDF, PBCDF, and UMCDF will be the same as TOCDF. The referenced design documentation for ANCDF, PBCDF, and UMCDF does not reflect changes that would implement the TOCDF configuration. *Each site is currently modifying their CEMS configuration independently based on state-specific requirements. The ANCDF A&I matrices reflect the most recent ANCDF proposed configuration. For this revision of the FAWB, the PBCDF and UMCDF A&I matrices reflect the CEMS configuration defined in the DSIC response to RFI S-ALL-249.*

B-14 The PAS condensate removal system at TOCDF and a proposed miscellaneous liquid waste collection system at JACADS are intended to collect and recover PAS condensate. Addition of the PFS at ANCDF, PBCDF, and UMCDF (see FAWB Note B-4) eliminates the need for a condensate removal system because of the low moisture content in the exhaust gas. Therefore, ANCDF, PBCDF, and UMCDF will not have a PAS condensate removal system.

B-15 Under ECPs TEMP2068LIC, TEMP2300MPF, and TEMP2313DFS, TOCDF installed Hastelloy grating over the bottom of the quench towers to prevent falling

salt and other debris from accumulating around the vortex breaker and blocking drainage. Based on PLL ECP review meeting discussions, these changes are being implemented programmatically. UMCDF is incorporating similar changes under UMSF894DFS, UMSF896LIC, and UMSF897MPF. ANCDF has implemented the change on the LIC by ANAP620LIC, and will issue separate ECPs for the DFS and MPF. PBCDF has not yet issued ECPs for these changes.

TOCDF has also added new spray nozzles at the bottom of the LIC and MPF quench towers to spray on the grating and towards the inlet duct to help dissolve the solids as they form and accumulate (ref: TEMP2371PAS, TEMP2538LIC, and TEMP2539LIC). Others sites will evaluate these changes after TOCDF has accumulated addition operating experience with the sprays.

B-16 In the original TOCDF configuration, a timer automatically switched the input from the two quench brine and clean liquor pH meters every hour and purged the one not used for control. Concern with thermally shocking the probes with relatively cold process water every hour led TOCDF to modify the configuration and leave both pH probes online continuously (Ref: PLL Issue 95-78). While both pH probes are online, the signal that is used for control and to generate alarms is alternated every hour. In addition, there is an alarm to alert the operator if the difference between the two probes is greater than 0.5 pH. For the MPF and LIC quench brine pH, a screen icon can be selected to indicate that a probe is in calibrate mode. Placing a probe in calibrate forces the other probe to remain as the control input. Simultaneously placing both probes in calibration mode generates a STOP FEED. For the DFS quench brine pH and all clean liquor pH probes, there is no calibrate mode, however, placing the pH probe isolation valves in MANUAL is functionally similar to placing a probe in calibrate mode for the MPF and LIC. There is no STOP FEED, however, if both clean liquor pH probe isolation valves on a furnace are in MANUAL simultaneously. The difference between quench brine pH configurations for the different furnaces at TOCDF is due to removal of the pH probe isolation valves for the MPF and LICs. The valves were removed under ECPs TEMP-2090-PAS and TEMP-2149-PAS. For the DFS quench brine pH probes and all clean liquor pH probes, the original solenoid isolation valves were replaced with air-actuated ball valves (ref: TEMP-2034-PAS). All three of these ECPs were reviewed as part of the PLL ECP review process. Each site is holding the ECPs for potential implementation if they encounter problems with the installed configuration.

Follow-on site designs are similar to the original TOCDF configuration. All quench brine and clean liquor pH probes have solenoid isolation valves. When in automatic, a timer automatically cycles the solenoid isolation valves for the two pH probes every hour so that one probe is online measuring the brine pH and the other probe is purged with process water. The designs do not specify a STOP FEED for both pH probes offline or in calibrate mode. Based on discussions at the January 2002 PAS/PFS FAWB comment resolution teleconference, if quench

brine and/or clean liquor pH are RCRA or MACT parameters, alarms will be added to STOP FEED if both pH probes are offline simultaneously.

B-17 At TOCDF, the mist eliminator water return pump runs continuously in AUTO unless an interlock condition is active. The interlocking conditions are high-high level in the scrubber tower sump, low-low level in the mist eliminator, or low seal water flow to the pump. At the October 2000 ANCDF PAS/PFS review meeting, it was decided that the pump-start logic would be modified at follow-on sites. Rather than having the pump start automatically whenever the interlocking conditions are satisfied, the pump will not start until the high liquid level alarm setpoint is reached in the mist eliminator vessel. After starting, level control at all four sites is identical.

B-18 It is expected that one stage of the ID fan running at 25 hp will generate enough draft to maintain minimum flow through the afterburner under emergency conditions. This condition needs to be demonstrated during systemization of each of the furnaces at ANCDF, PBCDF, and UMCDF.

B-19 At the Oct 2000 ANCDF PAS/PFS review meetings, the jumpers that appear in the TOCDF and ANCDF code for the scrubber tower sump level alarms and clean liquor level alarms were discussed. At TOCDF, the scrubber tower sump level high-high and low-low alarms require both the level switch (LSHH/LSLL) and the analog alarm (LAH/LAL) to be active. Similarly, the clean liquor level low-low alarm requires both the level switch (LSHH/LSLL) and the analog alarm (LAH/LAL) to be active. ANCDF code carried this software forward except that the HH and LL switches were replaced with the HHH and LLL switches for the scrubber tower sump level alarms.

Because of hardware improvements (Ref: ECPs ANAC206SRL, PBAC0264SRL, TEMP0938PAS, UMAC0079SRL), it was decided to remove the jumpers at all follow-on sites that require the analog alarms. Part of the jumper removal includes removing the jumpers in the PAS NORMAL relays for each furnace. Thus, in order to satisfy the PAS NORMAL conditions, the LSLLL and LSHHH alarms must not be active. The LAH and LAL alarms will not be inputs to the PAS NORMAL relay at ANCDF, PBCDF and UMCDF.

B-20 In response to RFI C-PBCDF-001. the DSIC recommended a 120-second time delay (initial setpoint can be revised during systemization) for shutdown of a clean liquor air cooler in response to it's low temperature alarm. The time delay should allow time for modulation of the louvers in an effort to increase the temperature at the discharge of the cooler. Operators are cautioned to confirm that the fans are running at low speed before closing the louvers. Automatic fan shutdown after a time delay is a guard against a runaway fan condition.

APPENDIX C

Alarm and Interlock Matrices

Appendix C contains *site-specific* alarm and interlock (A&I) matrices for *all four sites.* A&I matrices depict in a consolidated format the software and hardware alarms and interlocks for the equipment and instrumentation in a specific system. For TOCDF, the PAS alarms and interlocks are presented in *three* matrices: (1) DFS PAS, (2) LIC PAS, (3) MPF PAS. For ANCDF, PBCDF, and UMCDF, the PAS/PFS alarms and interlocks are presented in *three* matrices *for each site*: (1) DFS PAS*/PFS*, (2) LIC PAS*/PFS*, (3) MPF PAS*/PFS*.

Specific guidelines were developed during development of utility system FAWBs for ANCDF and UMCDF that *are* followed in the programmatic FAWBs. *Fourteen* specific guidelines have been established that define the format and content of entries in the A&I matrices:

1. Analog signals from transmitters (e.g., LITs) are not listed; the alarms are indicated separately.
2. All software prealarms and alarms (e.g., LAHs) that are indicated in the CON are listed. Setpoints and actions are shown where applicable.
3. Equipment and instrument status indication signals (e.g., open/close, on/off) are not listed unless they initiate action.
4. Alarms generated from GFE package units that report to the PLC are listed. If not already available and listed, the GFE internal alarms and actions will be added to the matrix when available from the site systems contractor and "*SC to provide detail*" will be entered into the "remarks" column.
5. For field switch generated alarms, the switch tag is listed, not the alarm tag. For example, a low-low pressure alarm (PALL) generated by the field switch, 13-PSLL-008, is listed as 13-PSLL-008 rather than 13-PALL-008. The purpose for this listing is to distinguish between field switch generated hardwired alarms and alarms generated in the software based on the analog output from a transmitter.
6. Instruments that initiate actions are listed in a vertical column sorted by prefix, loop number, instrument ID, then suffix. For example, for 99-TSH-100A, the prefix is 99, the loop number is 100, the instrument ID is TSH, and the suffix is A). Actions are listed in column across the top of the matrix and include prealarms and alarms.

7. Setpoints are listed for all instruments where applicable. Instrument ranges for analog transmitters are shown in Appendix F. Unless otherwise noted, tank level setpoints are shown from the level transmitter tap.

8. Only hand switches (push buttons) that cause system shutdowns are listed; other software and hardwired hand switches are not listed.

9. Local alarms are not listed.

10. Matrices are grouped by subsystem as applicable within each FAWB. For example, separate matrices are provided in the RHS FAWB for the rocket input feed assembly, the rocket drain station of the RSM, and the rocket shear station of the RSM.

11. Alarms associated with automatic actions are classified as *"alarms"* and alarms without automatic actions are classified as *"prealarms."*

12. Instruments listed in the matrix that are RCRA reportable are designated as such by entering *"RCRA"* in the remarks column.

13. Clarifications are provided when necessary in the remarks column of the A&I matrices, or in the system and/or operator response column in alarm and system response tables.

14. *Device malfunction alarms are not shown unless they initiate automatic actions such as equipment switchovers (e.g., to a standby pump), system shutdowns, or a stop feed signal.*

ANCDF DEACTIVATION FURNACE SYSTEM (DFS) POLLUTION ABATEMENT SYSTEM (PAS) AND PAS FILTER SYSTEM (PFS)

ANCDF DFS PAS/PFS — ALARM AND INTERLOCK MATRIX — **ANCDF DFS PAS/PFS**

P&IDs: AN-6-D-506,-507, -508, -509, -523, -524,-527, -530, and -531 ; PLC: ICS-CONR-112; INTERLOCK: I-10

B8:010/: F00 - SPARE; F01 - CLOSE ISOLATION VALVES; F02 - SHUTDOWN KILN LUBE OIL; F03 - SHUTDOWN HEATED DISCHARGE CONVEYOR; F04 - SHUTDOWN HEATED DISCHARGE CONVEYOR HEATERS; F05 - SHUTDOWN KILN DRIVE; F06 - OSCILLATE KILN DRIVE; F07 - SHUTDOWN AFTERBURNER COMBUSTION AIR BLOWER; F10 - SHUTDOWN AFTERBURNER #2; F11 - SHUTDOWN AFTERBURNER #1; F12 - SHUTDOWN KILN COMBUSTION AIR BLOWER; F13 - SHUTDOWN KILN BURNER; F14 - CLOSE KILN SHROUD DAMPERS; F15 - OPEN KILN SHROUD DAMPERS; F16 - SPARE; F17 - STOP FEED; MALFUNCTION

B8:011/: P17 - S/D PFS-COOL-115A FAN B (NOTE 1); P16 - S/D PFS-COOL-115A FAN A (NOTE 1); P15 - SD PFS-COOL-115B FAN B (NOTE 1); P14 - S/D PFS-COOL-115B FAN A (NOTE 1); P13 - S/D MIST ELIM WATER RETURN PUMP; P12 - SWITCHOVER BRINE PUMP TO BACKUP (NOTE 1); P11 - SWITCHOVER CL LIQ PUMP TO BACKUP (NOTE 1); P10 - BYPASS CARBON FILTER (NOTE 1); P07 - S/D BRINE PUMPS; P06 - S/D CLEAN LIQUOR PUMPS; P05 - S/D PFS-COOL-115C FAN B (NOTE 1); P04 - S/D PFS-COOL-115C FAN A (NOTE 1); P03 - S/D PFS-COOL-115D FAN B (NOTE 1); P02 - S/D PFS-COOL-115D FAN A (NOTE 1); P01 - S/D IST STAGE ID FAN; P00 - S/D 2ND STAGE ID FAN; PREALARM; ALERT

ITEM NUM	TAG NUMBER			DESCRIPTION	SET POINT	MALFUNCTION	B8:010/17	B8:010/16	B8:010/15	B8:010/14	B8:010/13	B8:010/12	B8:010/11	B8:010/10	B8:010/07	B8:010/06	B8:010/05	B8:010/04	B8:010/03	B8:010/02	B8:010/01	B8:010/00	B8:011/17	B8:011/16	B8:011/15	B8:011/14	B8:011/13	B8:011/12	B8:011/11	B8:011/10	B8:011/07	B8:011/06	B8:011/05	B8:011/04	B8:011/03	B8:011/02	B8:011/01	B8:011/00	ALERT	REMARKS	ALARM BIT B001:XX/XX	MASK WORD B8:XX	
1	16	AAH	059A	AB EXHAUST CO	160 ppm																																	X	Instantaneous alarm. Corrected to 7% O2 dry basis. See NOTE 2.	TBD	NA	
2	16	AAHH	059A	AB EXHAUST CO	200 ppm		X																																Instantaneous alarm. Corrected to 7% O2 dry basis. See NOTE 2.	TBD	TBD	
3	16	MSH	059A	AB EXH CO ANALYZER MOISTURE	39%																																	X	Setpoint is design value. Vendor-supplied switch has span of only 0-25%. See NOTE 2.	TBD	NA	
4	16	XS	059A	AB EXHAUST CO	MALF	X	X																																Stop feed on malfuntion alarm only if 16-AIT-059B is also in malfunction or is in "calibrate" mode. Alarm active only when combined fuel flow to kiln and afterburner > 100 scfm. See NOTE 2.	1021/02 1223/02	218	
5	16	HS	059A/B	BOTH DFS PAS CO ANALYZERS IN CAL	In Calib		X																																See NOTE 2.	1222/14	252	
6	16	AAH	059B	AB EXHAUST CO	160 ppm																																	X	Instantaneous alarm. Corrected to 7% O2 dry basis. See NOTE 2.	TBD	NA	
7	16	AAHH	059B	AB EXHAUST CO	200 ppm		X																																Instantaneous alarm. Corrected to 7% O2 dry basis. See NOTE 2.	TBD	TBD	
8	16	MSH	059B	AB EXH CO ANALYZER MOISTURE	39%																																	X	Setpoint is design value. Vendor-supplied switch has span of only 0-25%. See NOTE 2.	TBD	NA	
9	16	XS	059B	AB EXHAUST CO	MALF	X	X																																Stop feed on malfuntion alarm only if 16-AIT-059A is also in malfunction or is in "calibrate" mode. Alarm active only when combined fuel flow to kiln and afterburner > 100 scfm. See NOTE 2.	TBD	TBD	
10	16	AAH	059C	AB EXHAUST CO	90 ppm																																	X	1 hr rolling average. Corrected to 7% O2 dry basis. See NOTE 2.	TBD	NA	
11	16	AAHH	059C	AB EXHAUST CO	100 ppm		X																																RCRA AWFCO DFS 08. 1 hr rolling average Corrected to 7% O2 dry basis. See NOTE 2.	**1056/02**	**300**	CH 6
12	16	AAH	175A	AB EXHAUST O2	12% O2																																	X	Corrected to dry basis. See NOTE 2.	TBD	NA	
13	16	AAHH	175A	AB EXHAUST O2	15% O2		X																																RCRA AWFCO DFS 09. Corrected to dry basis. See NOTEs 2 & 3.	**1054/00**	248	CH 6
14	16	AAL	175A	AB EXHAUST O2	6% O2																																	X	Corrected to dry basis. See NOTE 2.	TBD	NA	
15	16	AALL	175A	AB EXHAUST O2	3% O2		X																																RCRA AWFCO DFS 10. Corrected to dry basis. See NOTEs 2 & 3.	**1054/10**	174	CH 6

ANCDF DEACTIVATION FURNACE SYSTEM (DFS) POLLUTION ABATEMENT SYSTEM (PAS) AND PAS FILTER SYSTEM (PFS)

ANCDF DFS PAS/PFS — ALARM AND INTERLOCK MATRIX — **ANCDF DFS PAS/PFS**

P&IDs: AN-6-D-506,-507, -508, -509, -523, -524,-527, -530, and -531 ; PLC: ICS-CONR-112; INTERLOCK: I-10

B8:010/: F00 - SPARE; F01 - CLOSE ISOLATION VALVES; F02 - SHUTDOWN KILN LUBE OIL; F03 - SHUTDOWN HEATED DISCHARGE CONVEYOR; F04 - SHUTDOWN HEATED DISCHARGE CONVEYOR HEATERS; F05 - SHUTDOWN KILN DRIVE; F06 - OSCILLATE KILN DRIVE; F07 - SHUTDOWN AFTERBURNER COMBUSTION AIR BLOWER; F10 - SHUTDOWN AFTERBURNER #2; F11 - SHUTDOWN AFTERBURNER #1; F12 - SHUTDOWN KILN COMBUSTION AIR BLOWER; F13 - SHUTDOWN KILN BURNER; F14 - CLOSE KILN SHROUD DAMPERS; F15 - OPEN KILN SHROUD DAMPERS; F16 - SPARE; F17 - STOP FEED; MALFUNCTION

B8:011/: P17 - S/D PFS-COOL-115A FAN B (NOTE 1); P16 - S/D PFS-COOL-115A FAN A (NOTE 1); P15 - SD PFS-COOL-115B FAN B (NOTE 1); P14 - S/D PFS-COOL-115B FAN A (NOTE 1); P13 - S/D MIST ELIM WATER RETURN PUMP; P12 - SWITCHOVER BRINE PUMP TO BACKUP (NOTE 1); P11 - SWITCHOVER CL LIQ PUMP TO BACKUP (NOTE 1); P10 - BYPASS CARBON FILTER (NOTE 1); P07 - S/D BRINE PUMPS; P06 - S/D CLEAN LIQUOR PUMPS; P05 - S/D PFS-COOL-115C FAN B (NOTE 1); P04 - S/D PFS-COOL-115C FAN A (NOTE 1); P03 - S/D PFS-COOL-115D FAN B (NOTE 1); P02 - S/D PFS-COOL-115D FAN A (NOTE 1); P01 - S/D IST STAGE ID FAN; P00 - S/D 2ND STAGE ID FAN; PREALARM; ALERT

ITEM NUM	TAG NUMBER			DESCRIPTION	SET POINT	MALF	17	16	15	14	13	12	11	10	07	06	05	04	03	02	01	00	17	16	15	14	13	12	11	10	07	06	05	04	03	02	01	00	PREALARM	ALERT	REMARKS	ALARM BIT B001:XX/XX	MASK WORD B8:XX	
16	16	XS	175A	AB EXHAUST O2	MALF	X	X																																		Stop feed on malfuntion alarm only if 16-AIT-175B is also in malfunction or is in "calibrate" mode. See NOTE 2.	1021/06 1223/00	162	
17	16	HS	175A/B	BOTH DFS PAS O2 ANALYZERS IN CAL	In Calib		X																																		See NOTE 2.	1222/16	**251**	CH 6
18	16	AAH	175B	AB EXHAUST O2	12% O2																																		X		Corrected to dry basis. See NOTE 2.	TBD	NA	
19	16	AAHH	175B	AB EXHAUST O2	15% O2		X																																		RCRA AWFCO DFS 09. Corrected to dry basis. See NOTEs 2 & 3.	**1053/00**	**249**	CH 6
20	16	AAL	175B	AB EXHAUST O2	6% O2																																		X		Corrected to dry basis. See NOTE 2.	TBD	NA	
21	16	AALL	175B	AB EXHAUST O2	3% O2		X																																		RCRA AWFCO DFS 10. Corrected to dry basis. See NOTEs 2 & 3.	**1053/10**	TBD	CH 6
22	16	XS	175B	AB EXHAUST O2	MALF	X	X																																		Stop feed on malfuntion alarm only if 16-AIT-175A is also in malfunction or is in "calibrate" mode. See NOTE 2.	TBD	TBD	
23	16	AAL	781A	CO2 COMB EFFICIENCY	99.90%		X																																		TSCA. 3 min delay. Alarm on combustion efficiency less than 99.9% continuously for 3 minutes. See NOTE 2.	1052/00	220	
24	16	AAL	781A	CO2 COMB EFFICIENCY	99.90%																																		X		Instantaneous alarm. See NOTE 2.	1052/04	NA	
25	16	AAL	781B	CO2 COMB EFFICIENCY	99.90%		X																																		TSCA. 3 min delay. Alarm on combustion efficiency less than 99.9% continuously for 3 minutes. See NOTE 2.	1052/00	220	
26	16	AAL	781B	CO2 COMB EFFICIENCY	99.90%																																		X		Instantaneous alarm. See NOTE 2.	1052/04	NA	
27	16	HS	781A/B	ANALYZER CO2	In Calib		X																																		Alarm when both 16-HS-781A and -781B are in calibrate.	1222/12	250	
28	16	XS	781A	AFTERBURNER CHAMBER CO2	MALF	X	X																																		TSCA. See NOTE 2.	1022/12	222	
29	16	XS	781B	AFTERBURNER CHAMBER CO2	MALF	X	X																																		TSCA. See NOTE 2.	1022/14	222	
30	24	TSHH	001	QUENCH TOWER-103 OVERHEAD	215°F		X																																		RCRA AWFCO DFS 25. Open emergency quench spray (see FAWB Note B-7). SP per ANAP1110PAS.	1420/00	112	
31	24	FAL	002	BRINE TO QUENCH TWR	200 gpm		X																																		5 sec delay.	1450/00	114	
32	24	PDAH	003	SCRUBBER MIST ELIMINATOR	2 in wc																																		X			1651/06	NA	
33	24	FAL	006	VENTURI BRINE FEED	310 gpm																																		X		5 sec delay. Prealarm and SP per ANAP1110PAS and RFI C-ANCDF-003R1.	**1850/02**	NA	CH 6
34	24	FALL	006	VENTURI BRINE FEED	300 gpm		X																																		RCRA AWFCO DFS 15; **10 sec** delay. SP per ANAP1110PAS and RFI C-ANCDF-003R1.	**1851/16**	180	CH 6/8

ANCDF DEACTIVATION FURNACE SYSTEM (DFS) POLLUTION ABATEMENT SYSTEM (PAS) AND PAS FILTER SYSTEM (PFS)

ANCDF DFS PAS/PFS — ALARM AND INTERLOCK MATRIX — **ANCDF DFS PAS/PFS**

P&IDs: AN-6-D-506,-507, -508, -509, -523, -524,-527, -530, and -531 ; PLC: ICS-CONR-112; INTERLOCK: I-10

B8:010/

	17	16	15	14	13	12	11	10	07	06	05	04	03	02	01	00
F00 - SPARE																
F01 - CLOSE ISOLATION VALVES																
F02 - SHUTDOWN KILN LUBE OIL																
F03 - SHUTDOWN HEATED DISCHARGE CONVEYOR																
F04 - SHUTDOWN HEATED DISCHARGE CONVEYOR HEATERS																
F05 - SHUTDOWN KILN DRIVE																
F06 - OSCILLATE KILN DRIVE																
F07 - SHUTDOWN AFTERBURNER COMBUSTION AIR BLOWER																
F10 - SHUTDOWN AFTERBURNER #2																
F11 - SHUTDOWN AFTERBURNER #1																
F12 - SHUTDOWN KILN COMBUSTION AIR BLOWER																
F13 - SHUTDOWN KILN BURNER																
F14 - CLOSE KILN SHROUD DAMPERS																
F15 - OPEN KILN SHROUD DAMPERS																
F16 - SPARE																
F17 - STOP FEED																
MALFUNCTION																

B8:011/

	17	16	15	14	13	12	11	10	07	06	05	04	03	02	01	00
P17 - S/D PFS-COOL-115A FAN B (NOTE 1)																
P16 - S/D PFS-COOL-115A FAN A (NOTE 1)																
P15 - SD PFS-COOL-115B FAN B (NOTE 1)																
P14 - S/D PFS-COOL-115B FAN A (NOTE 1)																
P13 - S/D MIST ELIM WATER RETURN PUMP																
P12 - SWITCHOVER BRINE PUMP TO BACKUP (NOTE 1)																
P11 - SWITCHOVER CL LIQ PUMP TO BACKUP (NOTE 1)																
P10 - BYPASS CARBON FILTER (NOTE 1)																
P07 - S/D BRINE PUMPS																
P06 - S/D CLEAN LIQUOR PUMPS																
P05 - S/D PFS-COOL-115C FAN B (NOTE 1)																
P04 - S/D PFS-COOL-115C FAN A (NOTE 1)																
P03 - S/D PFS-COOL-115D FAN B (NOTE 1)																
P02 - S/D PFS-COOL-115D FAN A (NOTE 1)																
P01 - S/D IST STAGE ID FAN																
P00 - S/D 2ND STAGE ID FAN																
PREALARM																
ALERT																

ITEM NUM	TAG NUMBER			DESCRIPTION	SET POINT	ALERT	REMARKS	ALARM BIT B001:XX/XX	MASK WORD B8:XX	
35	24	AAH	007	QUENCH BRINE pH	9.5 pH	X		1850/12	NA	
36	24	AAL	007	QUENCH BRINE pH	6.5 pH	X	SP per Oct 2000 AN PAS/PFS mtg.	1851/06	NA	
37	24	AALL	007	QUENCH BRINE pH	5.5 pH		SP per Oct 2000 AN PAS/PFS mtg. Alarm to be added to AN-6-D-506 by ANAP1110PAS.	1850/10	212	
38	24	PDAH	007	QUENCH BRINE FILTER PRESS	10.0 psid	X		1850/14	NA	
39	24	PDAH	008	VENTURI SCRUBBER DELTA P	SP+10 in wc	X	SP=setpoint entered in controller by operator	1850/06	NA	
40	24	PDAL	008	VENTURI SCRUBBER DELTA P	25 in wc	X		1850/04	NA	
41	24	PDALL	008	VENTURI SCRUBBER DELTA P	**25 in wc**		RCRA AWFCO DFS 14. See NOTE 3.	1851/00	116	CH 8
42	24	LAH	009	DFS QUENCH TOWER	2.0 in	X	10 sec delay.	1450/04	NA	
43	24	LAHH	009	DFS QUENCH TOWER	8.0 in		Shuts off brine spray to quench tower and PRW makeup to quench brine. Input to PAS NORMAL relay.	1450/02	118	
44	24	LAH	010	SCRUBBER BOTTOM SUMP	**38 in**	X	Prealarm per Oct 2000 PAS/PFS mtg.	1650/16	122	CH 6
45	24	LAL	010	SCRUBBER BOTTOM SUMP	**26 in**	X	Prealarm per Oct 2000 PAS/PFS mtg.	1650/14	120	CH 6
46	24	LSHH	010	SCRUBBER BOTTOM SUMP	**50 in**		3 sec delay. Open 24-DV-33 (Deenergize 24-LY-33)	1621/02	NA	CH 6
47	24	LSLL	010	SCRUBBER BOTTOM SUMP	**20 in**		3 sec delay. Close 24-DV-33 (24-LY-33 energized and drive 24-DY-33 to close).	1621/04	NA	CH 6
48	24	PAL	011	QUENCH BRINE DICHARGE	70 psig		10 sec delay after pump startup. 3 sec delay before S/D of primary pump. Response per Oct 2000 AN PAS/PFS review mtg. SP may change due to updated pump head calculations in ECPs ANAC1038SRL & ANAP1110PAS.	1850/00	NA	
49	24	PALL	011	QUENCH BRINE DICHARGE	40 psig		Alarm to be added to AN-6-D-506 by ANAC1110PAS.	1851/12	256	
50	24	XA	013	BRINE PUMP 106	MALF		Switchover to secondary pump on malf. alarm when PAS-PUMP-106 is selected as primary.	1860/11	NA	
51	24	FISL	017	BRINE PUMP 106 SEAL WATER	0.15 gpm		S/D PAS-PUMP-106 if selected as primary (3 sec delay) and switch to secondary pump. Alarm response per Oct 2000 AN PAS/PFS mtg.	1820/00	NA	
52	24	XA	019	BRINE PUMP 107	MALF		Switchover to secondary pump on malf. alarm when PAS-PUMP-107 is selected as primary.	1862/11	NA	
53	24	FISL	023	BRINE PUMP 107 SEAL WATER	0.15 gpm		S/D PAS-PUMP-107 if selected as primary (3 sec delay) and switch to secondary pump. Alarm response per Oct 2000 AN PAS/PFS mtg.	1820/02	NA	

ANCDF DEACTIVATION FURNACE SYSTEM (DFS) POLLUTION ABATEMENT SYSTEM (PAS) AND PAS FILTER SYSTEM (PFS)

ANCDF DFS PAS/PFS — ALARM AND INTERLOCK MATRIX — **ANCDF DFS PAS/PFS**

P&IDs: AN-6-D-506,-507, -508, -509, -523, -524,-527, -530, and -531 ; PLC: ICS-CONR-112; INTERLOCK: I-10

B8:010/

Bit	Description
17	F00 - SPARE
16	F01 - CLOSE ISOLATION VALVES
15	F02 - SHUTDOWN KILN LUBE OIL
14	F03 - SHUTDOWN HEATED DISCHARGE CONVEYOR
13	F04 - SHUTDOWN HEATED DISCHARGE CONVEYOR HEATERS
12	F05 - SHUTDOWN KILN DRIVE
11	F06 - OSCILLATE KILN DRIVE
10	F07 - SHUTDOWN AFTERBURNER COMBUSTION AIR BLOWER
07	F10 - SHUTDOWN AFTERBURNER #2
06	F11 - SHUTDOWN AFTERBURNER #1
05	F12 - SHUTDOWN KILN COMBUSTION AIR BLOWER
04	F13 - SHUTDOWN KILN BURNER
03	F14 - CLOSE KILN SHROUD DAMPERS
02	F15 - OPEN KILN SHROUD DAMPERS
01	F16 - SPARE
00	F17 - STOP FEED

B8:011/

Bit	Description
17	P17 - S/D PFS-COOL-115A FAN B (NOTE 1)
16	P16 - S/D PFS-COOL-115A FAN A (NOTE 1)
15	P15 - SD PFS-COOL-115B FAN B (NOTE 1)
14	P14 - S/D PFS-COOL-115B FAN A (NOTE 1)
13	P13 - S/D MIST ELIM WATER RETURN PUMP
12	P12 - SWITCHOVER BRINE PUMP TO BACKUP (NOTE 1)
11	P11 - SWITCHOVER CL LIQ PUMP TO BACKUP (NOTE 1)
10	P10 - BYPASS CARBON FILTER (NOTE 1)
07	P07 - S/D BRINE PUMPS
06	P06 - S/D CLEAN LIQUOR PUMPS
05	P05 - S/D PFS-COOL-115C FAN B (NOTE 1)
04	P04 - S/D PFS-COOL-115C FAN A (NOTE 1)
03	P03 - S/D PFS-COOL-115D FAN B (NOTE 1)
02	P02 - S/D PFS-COOL-115D FAN A (NOTE 1)
01	P01 - S/D IST STAGE ID FAN
00	P00 - S/D 2ND STAGE ID FAN

MALFUNCTION — **PREALARM** — **ALERT**

ITEM NUM	TAG NUMBER	DESCRIPTION	SET POINT	MALFUNCTION	B8:010/17	B8:010/16	B8:010/15	B8:010/14	B8:010/13	B8:010/12	B8:010/11	B8:010/10	B8:010/07	B8:010/06	B8:010/05	B8:010/04	B8:010/03	B8:010/02	B8:010/01	B8:010/00	B8:011/17	B8:011/16	B8:011/15	B8:011/14	B8:011/13	B8:011/12	B8:011/11	B8:011/10	B8:011/07	B8:011/06	B8:011/05	B8:011/04	B8:011/03	B8:011/02	B8:011/01	B8:011/00	PREALARM	ALERT	REMARKS	ALARM BIT B001:XX/XX	MASK WORD B8:XX	
54	24 LSLLL 024	SCRUBBER BOTTOM SUMP	**14 in**		X			X	X	X	X	X	X		X	X												X										3 sec delay. Input to PAS NORMAL relay (see FAWB Note B-19). Alarm response per Oct 2000 PAS/PFS mtg.	1620/00	120	CH 6
55	24 PDAH 025	SCRUBBER-102 PACKED BED D.P.	6 in wc																																		X			1651/10	NA	
56	24 FAL 030	SCRUBBER-102 CLEAN LIQ FLOW	SP-10%																																		X		45 sec delay after pump startup. 5 sec delay for alarm. Design flow is 2185 gpm.	1650/10	NA	
57	24 FALL 030	SCRUBBER-102 CLEAN LIQ FLOW	**1635 gpm**		X																																		RCRA AWFCO DFS 17. See NOTE 3. 5 sec delay.	1650/06	182	CH 6
58	24 **OVERFLOW** 031	SCRUBBER-102 CHIMNEY TRAY	**86 in**																																		X		"Overflow" alarm added per ANAC1117SRL.	**1652/14**	NA	CH 6
59	24 LAL 031	SCRUBBER-102 CLEAN LIQUOR SUMP	24 in																																		X		SP from P&ID (14 ft 0 in. minus 12 ft 0 in. offset). SP is 30 in. above bottom of chimney tray well point. Alarm response per Oct 2000 PAS/PFS mtg.	1650/12	140	
60	24 LSHHH 032	SCRUBBER 102 SUMP	**56 in**		X			X	X	X	X	X	X		X	X									X														3 sec delay. Input to PAS NORMAL relay (see FAWB Note B-19). See NOTE 4 for additional interlocks. Alarm response per Oct 2000 PAS/PFS mtg.	1620/02	122	CH 6
61	24 DAH 033	PUMP-106/107 BRINE DENSITY	1.20 sg																																		X		Setpoint from RFI S-ALL-0232	1850/16	NA	
62	24 DAHH 033	PUMP-106/107 BRINE DENSITY	1.28 sg		X																																		RCRA AWFCO DFS 16; Equates to 80 lb/ft3. See NOTE 3. (Note: RFI S-ALL-0232 SP is 1.25 sg)	1851/02	184	
63	24 XA 033	PUMP-106/107 BRINE DENSITY MALF	MALF	X	X																																		Alarm and response per Oct 2000 AN PAS/PFS review mtg.	1851/14	**296**	CH 6
64	24 AAH 034	CLEAN LIQUOR pH	9.5 pH																																			**X**		1651/02	126	CH 9
65	24 AAL 034	CLEAN LIQUOR pH	7.5 pH																																		X		SP per Oct 2000 AN PAS/PFS review mtg.	1651/14	NA	
66	24 AALL 034	CLEAN LIQUOR pH	**6.5 pH**		X																																		RCRA AWFCO DFS 18. 45 sec delay after pump S/U. See NOTE 3. ANWP1122SRL added alarm to AN-6-D-506. See FAWB Note B-16.	1651/00	124	CH 8
67	24 DAH 035	CLEAN LIQUOR DENSITY	1.12 sg																																			**X**	SP per Oct 2000 AN PAS/PFS review mtg.	1651/04	NA	CH 6
68	24 DAHH 035	CLEAN LIQUOR DENSITY	1.15 sg		X																																		SP per Oct 2000 AN PAS/PFS review mtg.	1651/12	**294**	CH 6
69	24 XA 035	PUMP-108/109 CLEAN LIQ DENS MALF	MALF																																			**X**	Alarm per Oct 2000 AN PAS/PFS review mtg.	1652/12	NA	CH 6
70	24 PDAH 051	QUENCH TOWR 103 BRINE FILTER	10.0 psid																																		X			1450/06	NA	
71	24 XA 064	1st & 2nd STAGE ID FAN	NOT RUNNING		X				X			X																												1261/13 1263/13	226	
72	24 XA 065	2nd STAGE ID FAN	MALF	X	X																															X			Start I-lock for 2nd stage motor.	1263/11	264	

ANCDF DEACTIVATION FURNACE SYSTEM (DFS) POLLUTION ABATEMENT SYSTEM (PAS) AND PAS FILTER SYSTEM (PFS)

ANCDF DFS PAS/PFS — ALARM AND INTERLOCK MATRIX — **ANCDF DFS PAS/PFS**

P&IDs: AN-6-D-506,-507, -508, -509, -523, -524,-527, -530, and -531 ; PLC: ICS-CONR-112; INTERLOCK: I-10

B8:010/: F00 - SPARE; F01 - CLOSE ISOLATION VALVES; F02 - SHUTDOWN KILN LUBE OIL; F03 - SHUTDOWN HEATED DISCHARGE CONVEYOR; F04 - SHUTDOWN HEATED DISCHARGE CONVEYOR HEATERS; F05 - SHUTDOWN KILN DRIVE; F06 - OSCILLATE KILN DRIVE; F07 - SHUTDOWN AFTERBURNER COMBUSTION AIR BLOWER; F10 - SHUTDOWN AFTERBURNER #2; F11 - SHUTDOWN AFTERBURNER #1; F12 - SHUTDOWN KILN COMBUSTION AIR BLOWER; F13 - SHUTDOWN KILN BURNER; F14 - CLOSE KILN SHROUD DAMPERS; F15 - OPEN KILN SHROUD DAMPERS; F16 - SPARE; F17 - STOP FEED; MALFUNCTION

B8:011/: P17 - S/D PFS-COOL-115A FAN B (NOTE 1); P16 - S/D PFS-COOL-115A FAN A (NOTE 1); P15 - SD PFS-COOL-115B FAN B (NOTE 1); P14 - S/D PFS-COOL-115B FAN A (NOTE 1); P13 - S/D MIST ELIM WATER RETURN PUMP; P12 - SWITCHOVER BRINE PUMP TO BACKUP (NOTE 1); P11 - SWITCHOVER CL LIQ PUMP TO BACKUP (NOTE 1); P10 - BYPASS CARBON FILTER (NOTE 1); P07 - S/D BRINE PUMPS; P06 - S/D CLEAN LIQUOR PUMPS; P05 - S/D PFS-COOL-115C FAN B (NOTE 1); P04 - S/D PFS-COOL-115C FAN A (NOTE 1); P03 - S/D PFS-COOL-115D FAN B (NOTE 1); P02 - S/D PFS-COOL-115D FAN A (NOTE 1); P01 - S/D IST STAGE ID FAN; P00 - S/D 2ND STAGE ID FAN; PREALARM; ALERT

ITEM NUM	TAG NUMBER	DESCRIPTION	SET POINT	B8:010/ 17	16	15	14	13	12	11	10	07	06	05	04	03	02	01	00	B8:011/ 17	16	15	14	13	12	11	10	07	06	05	04	03	02	01	00	PREALARM	ALERT	REMARKS	ALARM BIT B001:XX/XX	MASK WORD B8:XX	
73	24 XA 066	2nd STAGE ID FAN TROUBLE	Trouble	X																														X			Alarm response per RFI C-ANCDF-002. Trouble alarm initiated by ASD motor thermal overload which stops the motor.	1224/00	**158**	CH 6
74	24 SAH 066A	2nd STAGE ID FAN SPEED	**1775 rpm**																																		SP per RFI S-ALL-232.	1253/02	TBD	CH 6
75	24 AAH 075	SO2 EMISSION	13.6 lb/hr																																X		Alarm will be generated in PLC based on analog input rather than using digital input as shown on AN-6-D-507 (Ref: RFI S-ALL-249). Alarm is not in Jan 2000 code. See NOTE 2.	TBD	NA	
76	24 AAH 076	NOX EMISSION	76.8 lb/hr																																X		Alarm will be generated in PLC based on analog input rather than digital input as shown on AN-6-D-507 (Ref: RFI S-ALL-249). See NOTE 2.	1222/06	NA	
77	24 TSH 077A-F	2ND STAGE ID FAN WINDING TEMP	320°F																																**X**		3 sec delay. Alarm on high temp for any of 24-TSH-077A thru F. SP from vendor info. Response per Oct 2000 AN PAS/PFS mtg.	1220/00	**NA**	CH 6
78	24 TSHH 077A-F	2ND STAGE ID FAN WINDING TEMP	329°F	**X**																														X			3 sec delay. Alarm on high-high temp for any of 24-TSHH-077A thru F. S/D 2nd stage, except when running in emergency mode. SP from vendor info. Response per Oct 2000 AN PAS/PFS review mtg.	1223/06	**128**	CH 6
79	24 XAH 080	2nd STAGE ID FAN VIBRATION	0.25 in/sec																																**X**		3 sec delay. See NOTE 7.	1252/02	TBD	CH 6
80	24 XSHH 080	2nd STAGE ID FAN VIBRATION	0.5 in/sec	**X**																														X			3 sec delay. S/D 2nd stage, except when running in emergency mode. See NOTE 7.	1220/06	130	CH 6
81	24 FAH 191	PAS-SCRB-102 CAUSTIC ADDITION	SP + 20%																																	**X**	Alarm active in flow control mode only. SP = controller setpoint. SP and response per Oct 2000 PAS/PFS review mtg	1652/10	NA	CH 6
82	24 FAL 191	PAS-SCRB-102 CAUSTIC ADDITION	SP - 20%																																X		Alarm active in flow control mode only. SP = controller setpoint. SP and response per Oct 2000 PAS/PFS review mtg	1652/06	NA	
83	24 TAH 274	CLEAN LIQUOR TO SCRUBBER	128°F																																X		SP per RFI S-ALL-232.	1652/02	NA	
84	24 TAHH 274	CLEAN LIQUOR TO SCRUBBER	143°F	X																																	Refs: RFI S-ALL-232 & ANAP1110PAS.	1652/00	NA	
85	24 TAL 274	CLEAN LIQUOR TO SCRUBBER	100°F																																	**X**	SP per RFI S-ALL-232.	1652/04	NA	CH 6
86	24 PDAH 312	MIST ELIM. CANDLES DIFF P	15 in wc																																X			0650/04	NA	
87	24 PDAHH 312	MIST ELIM. CANDLES DIFF P	20 in wc	X																																		0650/06	192	

ANCDF DEACTIVATION FURNACE SYSTEM (DFS) POLLUTION ABATEMENT SYSTEM (PAS) AND PAS FILTER SYSTEM (PFS)

ANCDF DFS PAS/PFS — ALARM AND INTERLOCK MATRIX — **ANCDF DFS PAS/PFS**

P&IDs: AN-6-D-506,-507, -508, -509, -523, -524,-527, -530, and -531 ; PLC: ICS-CONR-112; INTERLOCK: I-10

B8:010/: F00 - SPARE; F01 - CLOSE ISOLATION VALVES; F02 - SHUTDOWN KILN LUBE OIL; F03 - SHUTDOWN HEATED DISCHARGE CONVEYOR; F04 - SHUTDOWN HEATED DISCHARGE CONVEYOR HEATERS; F05 - SHUTDOWN KILN DRIVE; F06 - OSCILLATE KILN DRIVE; F07 - SHUTDOWN AFTERBURNER COMBUSTION AIR BLOWER; F10 - SHUTDOWN AFTERBURNER #2; F11 - SHUTDOWN AFTERBURNER #1; F12 - SHUTDOWN KILN COMBUSTION AIR BLOWER; F13 - SHUTDOWN KILN BURNER; F14 - CLOSE KILN SHROUD DAMPERS; F15 - OPEN KILN SHROUD DAMPERS; F16 - SPARE; F17 - STOP FEED; MALFUNCTION

B8:011/: P17 - S/D PFS-COOL-115A FAN B (NOTE 1); P16 - S/D PFS-COOL-115A FAN A (NOTE 1); P15 - SD PFS-COOL-115B FAN B (NOTE 1); P14 - S/D PFS-COOL-115B FAN A (NOTE 1); P13 - S/D MIST ELIM WATER RETURN PUMP; P12 - SWITCHOVER BRINE PUMP TO BACKUP (NOTE 1); P11 - SWITCHOVER CL LIQ PUMP TO BACKUP (NOTE 1); P10 - BYPASS CARBON FILTER (NOTE 1); P07 - S/D BRINE PUMPS; P06 - S/D CLEAN LIQUOR PUMPS; P05 - S/D PFS-COOL-115C FAN B (NOTE 1); P04 - S/D PFS-COOL-115C FAN A (NOTE 1); P03 - S/D PFS-COOL-115D FAN B (NOTE 1); P02 - S/D PFS-COOL-115D FAN A (NOTE 1); P01 - S/D IST STAGE ID FAN; P00 - S/D 2ND STAGE ID FAN

PREALARM; ALERT

ITEM NUM	TAG NUMBER	DESCRIPTION	SET POINT	17	16	15	14	13	12	11	10	07	06	05	04	03	02	01	00	17	16	15	14	13	12	11	10	07	06	05	04	03	02	01	00	PREALARM	ALERT	REMARKS	ALARM BIT B001:XX/XX	MASK WORD B8:XX	
88	24 LSHH 313	MIST ELIM. CANDLES SUMP	66 in																																			3 sec delay. SP from AN-6-D-508. Input to PAS NORMAL relay.	0620/02	NA	
89	24 LAH 314	PAS MIST ELIM. SUMP	16 in																																		X	SP from AN-6-D-508. Start PAS-PUMP-138 (see FAWB Note B-17).	0650/02	NA	CH 6
90	24 LAHH 314	PAS MIST ELIM. SUMP	18 in																																			SP from AN-6-D-508.	0650/10	NA	
91	24 LAL 314	PAS MIST ELIM. SUMP	10 in																																		X	SP from AN-6-D-508.	0650/00	NA	CH 6
92	24 LSLL 315	PAS MIST ELIM. SUMP	8 in																					X														3 sec delay. SP from AN-6-D-508. Alarm active when 24-HS-314 selected to DFS mist eliminator. Hardwired S/D of pump needs to be disabled when 24-HS-314 is aligned to the spare. (Note 24-HS-314 is not shown on P&ID).	0620/00	276	
93	24 LSHH 347	PAS AREA SUMP PUMP-110	106 in																																			3 sec delay; DICO to ICS-CONR-111 to S/D feeding sump pumps. SP from instrument data sheet.	0620/04	NA	
94	24 FSL 373	QUENCH EMERGENCY WATER	10 gpm																																			3 sec delay. SP from instrument data sheet. Active only when 24-TV-001 is open.	1420/02	NA	
95	24 TAH 374	QUENCH TOWER OVERHEAD	200°F																																	X		(see FAWB Note B-7)	1450/10	NA	
96	24 TSHHH 375	QUENCH TOWER OVERHEAD	250°F	X			X	X	X	X		X		X	X																							SP per ECP ANAC849ICS. Input to PAS NORMAL relay. See FAWB Note B-7.	1420/10	138	
97	24 FSL 376	SCRUBBER-102 PROCESS WTR	20 gpm																																		X	3 sec delay. SP from instrument data sheet. Active only when 24-XV-026 is energized.	1620/10	NA	CH 6
98	24 LSLL 381	SCRUBBER 102 CLEAN LIQUOR SUMP	3 in	X																								X										3-sec delay. SP from AN-6-D-506 (14 ft 0 in. minus 12 ft 0 in. offset). SP is 9 in. above bottom of chimney tray well point. Alarm response per Oct 2000 PAS/PFS mtg.	1620/12	140	
99	24 IAH 387	2nd STAGE ID FAN OVER CURRENT	**450 amp**																																	X		2-min delay on startup. SP per RFI S-ALL-232.	1250/02	**147**	CH 6
100	24 FSL 430	SCRB-102 MIN FLOW FOR PURGE	**7000 scfm**																																	X		Min flow for purge. SP from instrument data sheet.	1620/14	NA	CH 6
101	24 FSLL 430	SCRB-102 EXHAUST GAS	1000 scfm	X				X		X	X																											SP from instrument data sheet. BMS 3-P running interlock.	1620/16	148	
102	24 TSH 448A/B	1st STAGE ID FAN BEARING TEMP	160°F																																	X		3 sec delay. SP from vendor info. Response per Oct 2000 AN PAS/PFS review mtg.	1221/10	**NA**	CH 6

ANCDF DEACTIVATION FURNACE SYSTEM (DFS) POLLUTION ABATEMENT SYSTEM (PAS) AND PAS FILTER SYSTEM (PFS)

ANCDF DFS PAS/PFS — ALARM AND INTERLOCK MATRIX — **ANCDF DFS PAS/PFS**

P&IDs: AN-6-D-506,-507, -508, -509, -523, -524,-527, -530, and -531 ; PLC: ICS-CONR-112; INTERLOCK: I-10

B8:010/: F00 - SPARE; F01 - CLOSE ISOLATION VALVES; F02 - SHUTDOWN KILN LUBE OIL; F03 - SHUTDOWN HEATED DISCHARGE CONVEYOR; F04 - SHUTDOWN HEATED DISCHARGE CONVEYOR HEATERS; F05 - SHUTDOWN KILN DRIVE; F06 - OSCILLATE KILN DRIVE; F07 - SHUTDOWN AFTERBURNER COMBUSTION AIR BLOWER; F10 - SHUTDOWN AFTERBURNER #2; F11 - SHUTDOWN AFTERBURNER #1; F12 - SHUTDOWN KILN COMBUSTION AIR BLOWER; F13 - SHUTDOWN KILN BURNER; F14 - CLOSE KILN SHROUD DAMPERS; F15 - OPEN KILN SHROUD DAMPERS; F16 - SPARE; F17 - STOP FEED; MALFUNCTION

B8:011/: P17 - S/D PFS-COOL-115A FAN B (NOTE 1); P16 - S/D PFS-COOL-115A FAN A (NOTE 1); P15 - SD PFS-COOL-115B FAN B (NOTE 1); P14 - S/D PFS-COOL-115B FAN A (NOTE 1); P13 - S/D MIST ELIM WATER RETURN PUMP; P12 - SWITCHOVER BRINE PUMP TO BACKUP (NOTE 1); P11 - SWITCHOVER CL LIQ PUMP TO BACKUP (NOTE 1); P10 - BYPASS CARBON FILTER (NOTE 1); P07 - S/D BRINE PUMPS; P06 - S/D CLEAN LIQUOR PUMPS; P05 - S/D PFS-COOL-115C FAN B (NOTE 1); P04 - S/D PFS-COOL-115C FAN A (NOTE 1); P03 - S/D PFS-COOL-115D FAN B (NOTE 1); P02 - S/D PFS-COOL-115D FAN A (NOTE 1); P01 - S/D IST STAGE ID FAN; P00 - S/D 2ND STAGE ID FAN; PREALARM; ALERT

ITEM NUM	TAG NUMBER	DESCRIPTION	SET POINT	MALFUNCTION	B8:010/ 17	16	15	14	13	12	11	10	07	06	05	04	03	02	01	00	B8:011/ 17	16	15	14	13	12	11	10	07	06	05	04	03	02	01	00	PREALARM	ALERT	REMARKS	ALARM BIT B001:XX/XX	MASK WORD B8:XX	
103	24 TSHH 448A/B	1st STAGE ID FAN BEARING TEMP	200°F		X																														X				3 sec delay. S/D 1st stage, except when running in emergency mode. SP from vendor info. Response per Oct 2000 AN PAS/PFS mtg.	1223/10	194	CH 6
104	24 TSH 449A/B	2nd STAGE ID FAN BEARING TEMP	160°F																																		X		3 sec delay. SP from vendor info. Response per Oct 2000 AN PAS/PFS review mtg.	1221/12	NA	CH 6
105	24 TSHH 449A/B	2nd STAGE ID FAN BEARING TEMP	200°F		X																														X				3 sec delay. S/D 2nd stage, except when running in emergency mode. SP from vendor info. Response per Oct 2000 AN PAS/PFS mtg.	1223/12	196	CH 6
106	24 PDAH 655	CLEAN LIQ STRAINER FILTER	10.0 psid																																		X			1650/02	NA	
107	24 FISL 755	MIST ELIM RET PUMP SEAL WATER	0.15 gpm																						X														5 sec delay. SP from instrument data sheet.	0620/12	NA	
108	24 XA 773	1st STAGE ID FAN TROUBLE	Trouble		X																														X				Alarm response per RFI C-ANCDF-002. Trouble alarm initiated by ASD motor thermal overload which stops the motor.	1223/16	154	CH 6
109	24 SAH 773A	1st STAGE ID FAN SPEED	1775 rpm																																X				SP per RFI S-ALL-232.	1253/00	TBD	CH 6
110	24 TSH 966A-F	1st STAGE ID FAN WINDING TEMP	320°F																																		X		3 sec delay. Alarm on high temp for any of 24-TSH-966A thru F. SP from vendor info. Response per Oct 2000 AN PAS/PFS mtg.	1221/16	NA	CH 6
111	24 TSHH 966A-F	1st STAGE ID FAN WINDING TEMP	329°F		X																														X				3 sec delay. Alarm on high-high temp for any of 24-TSHH-966A thru F. S/D 1st stage, except when running in emergency mode. SP from vendor info. Response per Oct 2000 AN PAS/PFS review mtg.	1223/04	152	CH 6
112	24 IAH 967	1st STAGE ID FAN HIGH CURRENT	450 amp																																		X		2-min delay on startup. SP per RFI S-ALL-232.	1250/04	NA	CH 6
113	24 XAH 968	1st STAGE ID FAN VIBRATION	0.25 in/sec																																		X		3 sec delay. See NOTE 7.	1252/14	NA	CH 6
114	24 XSHH 968	1st STAGE ID FAN VIBRATION	0.5 in/sec		X																														X				3 sec delay.S/D 1st stage, except when running in emergency mode. See NOTE 7.	1222/00	156	CH 6
115	24 XA 970	1st STAGE ID FAN	MALF	X	X																														X				Start I-lock for 1st stage motor.	1261/11	198	
116	114 PDAH 080	PFS-COOL-115D CLEAN LIQ COOLER	45 psid																																		X		SP per RFI S-ALL-232.	3050/06	NA	CH 7
117	114 PDAL 080	PFS-COOL-115D CLEAN LIQ COOLER	20 psid																																		X		SP per RFI S-ALL-232.	3051/06	NA	CH 7
118	114 TAH 155	PFS-COOL-115D CLEAN LIQ COOLER	135°F																																		X		SP per RFI S-ALL-232.	3050/02	NA	
119	114 TAL 155	PFS-COOL-115D CLEAN LIQ COOLER	100°F																														X	X					SP per RFI S-ALL-232. Instant alarm, 120-sec delay for cooler S/D (see FAWB Note B-20).	3051/02	NA	
120	114 XSH 156	PFS-COOL-115D FAN B VIBRATION	See NOTE 6																																		X		5 sec delay (vendor info shows additional hardwired startup time delay relay)	3020/06	NA	

ANCDF DEACTIVATION FURNACE SYSTEM (DFS) POLLUTION ABATEMENT SYSTEM (PAS) AND PAS FILTER SYSTEM (PFS)

ANCDF DFS PAS/PFS

ALARM AND INTERLOCK MATRIX

ANCDF DFS PAS/PFS

P&IDs: AN-6-D-506,-507, -508, -509, -523, -524,-527, -530, and -531 ; PLC: ICS-CONR-112; INTERLOCK: I-10

B8:010/

ITEM NUM	TAG NUMBER	DESCRIPTION	SET POINT	F00 - SPARE	F01 - CLOSE ISOLATION VALVES	F02 - SHUTDOWN KILN LUBE OIL	F03 - SHUTDOWN HEATED DISCHARGE CONVEYOR	F04 - SHUTDOWN HEATED DISCHARGE CONVEYOR HEATERS	F05 - SHUTDOWN KILN DRIVE	F06 - OSCILLATE KILN DRIVE	F07 - SHUTDOWN AFTERBURNER COMBUSTION AIR BLOWER	F10 - SHUTDOWN AFTERBURNER #2	F11 - SHUTDOWN AFTERBURNER #1	F12 - SHUTDOWN KILN COMBUSTION AIR BLOWER	F13 - SHUTDOWN KILN BURNER	F14 - CLOSE KILN SHROUD DAMPERS	F15 - OPEN KILN SHROUD DAMPERS	F16 - SPARE	F17 - STOP FEED	MALFUNCTION
				17	16	15	14	13	12	11	10	07	06	05	04	03	02	01	00
121	114 XSHH 157	PFS-COOL-115D FAN B VIBRATION	See NOTE 6																
122	114 XSH 158	PFS-COOL-115D FAN A VIBRATION	See NOTE 6																
123	114 XSHH 159	PFS-COOL-115D FAN A VIBRATION	See NOTE 6																
124	114 SAH 160A	PFS-COOL-115D FAN B SPEED	**1750 rpm**																
125	114 SAH 161A	PFS-COOL-115D FAN A SPEED	**1750 rpm**																
126	114 XA 165	PFS-COOL-115D FAN B	TROUBLE																
127	114 XA 167	PFS-COOL-115D FAN A	TROUBLE																
128	114 FISL 332	CLEAN LIQ PUMP A SEAL WATER	0.15 gpm																
129	114 FISL 335	CLEAN LIQ PUMP B SEAL WATER	0.15 gpm																
130	114 XA 340	CLEAN LIQ PUMP A (PFS-PUMP-138)	MALF	X															
131	114 PAL 344	CLEAN LIQ PUMP DISCH PRESS	50 psig																
132	114 PALL 344	CLEAN LIQ PUMP DISCH PRESS	25 psig		X														
133	114 XA 346	CLEAN LIQ PUMP B (PFS-PUMP-139)	MALF	X															
134	114 TAH 417	PFS-BURN-103 EXHAUST TEMP	172°F																
135	114 TAL 417	PFS-BURN-103 EXHAUST TEMP	135°F																

B8:011/

ITEM NUM	TAG NUMBER	DESCRIPTION	SET POINT	P17 - S/D PFS-COOL-115A FAN B (NOTE 1)	P16 - S/D PFS-COOL-115A FAN A (NOTE 1)	P15 - SD PFS-COOL-115B FAN B (NOTE 1)	P14 - S/D PFS-COOL-115B FAN A (NOTE 1)	P13 - S/D MIST ELIM WATER RETURN PUMP	P12 - SWITCHOVER BRINE PUMP TO BACKUP (NOTE 1)	P11 - SWITCHOVER CL LIQ PUMP TO BACKUP (NOTE 1)	P10 - BYPASS CARBON FILTER (NOTE 1)	P07 - S/D BRINE PUMPS	P06 - S/D CLEAN LIQUOR PUMPS	P05 - S/D PFS-COOL-115C FAN B (NOTE 1)	P04 - S/D PFS-COOL-115C FAN A (NOTE 1)	P03 - S/D PFS-COOL-115D FAN B (NOTE 1)	P02 - S/D PFS-COOL-115D FAN A (NOTE 1)	P01 - S/D IST STAGE ID FAN	P00 - S/D 2ND STAGE ID FAN	PREALARM	ALERT	REMARKS	ALARM BIT B001:XX/XX	MASK WORD B8:XX
				17	16	15	14	13	12	11	10	07	06	05	04	03	02	01	00					
121	114 XSHH 157	PFS-COOL-115D FAN B VIBRATION	See NOTE 6													X						5 sec delay (vendor info shows additional hardwired startup time delay relay)	3020/16	NA
122	114 XSH 158	PFS-COOL-115D FAN A VIBRATION	See NOTE 6																	X		5 sec delay (vendor info shows additional hardwired startup time delay relay)	3020/04	NA
123	114 XSHH 159	PFS-COOL-115D FAN A VIBRATION	See NOTE 6														X					5 sec delay (vendor info shows additional hardwired startup time delay relay)	3020/14	NA
124	114 SAH 160A	PFS-COOL-115D FAN B SPEED	**1750 rpm**																	**X**		SP per RFI S-ALL-232 (66Hz = 1980 rpm).	3050/16	NA
125	114 SAH 161A	PFS-COOL-115D FAN A SPEED	**1750 rpm**																	**X**		SP per RFI S-ALL-232 (66Hz = 1980 rpm).	3050/14	NA
126	114 XA 165	PFS-COOL-115D FAN B	TROUBLE													X						5 sec delay. Alarm generated by XSHH-157 or VFD in fault lockout. VFD internally configured to stop motor (see RFI C-PBCDF-002).	3021/06	NA
127	114 XA 167	PFS-COOL-115D FAN A	TROUBLE														X					5 sec delay. Alarm generated by XSHH-159 or VFD in fault lockout. VFD internally configured to stop motor (see RFI C-PBCDF-002).	3021/04	NA
128	114 FISL 332	CLEAN LIQ PUMP A SEAL WATER	0.15 gpm						X													S/D PFS-PUMP-138 if selected as primary (3 sec delay) and switch to secondary pump. Alarm response per Oct 2000 AN PAS/PFS mtg.	1620/04	NA
129	114 FISL 335	CLEAN LIQ PUMP B SEAL WATER	0.15 gpm						X													S/D PFS-PUMP-139 if selected as primary (3 sec delay) and switch to secondary pump. Alarm response per Oct 2000 AN PAS/PFS mtg.	1620/06	NA
130	114 XA 340	CLEAN LIQ PUMP A (PFS-PUMP-138)	MALF						X													Switchover to backup pump on malf. alarm when PFS-PUMP-138 is selected as primary.	1660/11	NA
131	114 PAL 344	CLEAN LIQ PUMP DISCH PRESS	50 psig						X													10 sec delay after pump startup. 3 sec delay before S/D of primary pump. Response per Oct 2000 PAS/PFS review mtg.	1650/00	NA
132	114 PALL 344	CLEAN LIQ PUMP DISCH PRESS	25 psig	X	X	X	X				X	X	X	X	X	X						RCRA AWFCO DFS 26. See NOTE 3. 10 sec delay after pump startup. Response per Oct 2000 PAS/PFS review mtg.	1650/04	186
133	114 XA 346	CLEAN LIQ PUMP B (PFS-PUMP-139)	MALF						X													Switchover to backup pump on malf. alarm when PFS-PUMP-139 is selected as primary.	1662/11	NA
134	114 TAH 417	PFS-BURN-103 EXHAUST TEMP	172°F																	X		SP per RFI S-ALL-241 R1.	3451/14	NA
135	114 TAL 417	PFS-BURN-103 EXHAUST TEMP	135°F																	X		SP per RFI S-ALL-241 R1.	3451/16	NA

CH 6

CH 6

CH 6

ANCDF DEACTIVATION FURNACE SYSTEM (DFS) POLLUTION ABATEMENT SYSTEM (PAS) AND PAS FILTER SYSTEM (PFS)

ANCDF DFS PAS/PFS — ALARM AND INTERLOCK MATRIX — **ANCDF DFS PAS/PFS**

P&IDs: AN-6-D-506,-507, -508, -509, -523, -524,-527, -530, and -531 ; PLC: ICS-CONR-112; INTERLOCK: I-10

B8:010/: F00 - SPARE; F01 - CLOSE ISOLATION VALVES; F02 - SHUTDOWN KILN LUBE OIL; F03 - SHUTDOWN HEATED DISCHARGE CONVEYOR; F04 - SHUTDOWN HEATED DISCHARGE CONVEYOR HEATERS; F05 - SHUTDOWN KILN DRIVE; F06 - OSCILLATE KILN DRIVE; F07 - SHUTDOWN AFTERBURNER COMBUSTION AIR BLOWER; F10 - SHUTDOWN AFTERBURNER #2; F11 - SHUTDOWN AFTERBURNER #1; F12 - SHUTDOWN KILN COMBUSTION AIR BLOWER; F13 - SHUTDOWN KILN BURNER; F14 - CLOSE KILN SHROUD DAMPERS; F15 - OPEN KILN SHROUD DAMPERS; F16 - SPARE; F17 - STOP FEED; MALFUNCTION

B8:011/: P17 - S/D PFS-COOL-115A FAN B (NOTE 1); P16 - S/D PFS-COOL-115A FAN A (NOTE 1); P15 - SD PFS-COOL-115B FAN B (NOTE 1); P14 - S/D PFS-COOL-115B FAN A (NOTE 1); P13 - S/D MIST ELIM WATER RETURN PUMP; P12 - SWITCHOVER BRINE PUMP TO BACKUP (NOTE 1); P11 - SWITCHOVER CL LIQ PUMP TO BACKUP (NOTE 1); P10 - BYPASS CARBON FILTER (NOTE 1); P07 - S/D BRINE PUMPS; P06 - S/D CLEAN LIQUOR PUMPS; P05 - S/D PFS-COOL-115C FAN B (NOTE 1); P04 - S/D PFS-COOL-115C FAN A (NOTE 1); P03 - S/D PFS-COOL-115D FAN B (NOTE 1); P02 - S/D PFS-COOL-115D FAN A (NOTE 1); P01 - S/D IST STAGE ID FAN; P00 - S/D 2ND STAGE ID FAN; PREALARM; ALERT

ITEM NUM	TAG NUMBER			DESCRIPTION	SET POINT	B8:010/ 17	16	15	14	13	12	11	10	07	06	05	04	03	02	01	00	B8:011/ 17	16	15	14	13	12	11	10	07	06	05	04	03	02	01	00	PREALARM	ALERT	REMARKS	ALARM BIT B001:XX/XX	MASK WORD B8:XX	
136	114	TSHH	430	PFS-BURN-103 EXHAUST TEMP	180°F		X																							X										Alarm response per Oct 2000 AN PAS/PFS mtg.	3420/10	286	
137	114	XA	431	PFS-BURN-103 EXH MOIST ANALYZER	> 10% DIFF																																	X		Alarm when MIT-431A & B deviation exceeds 10% of upper range value based on ROHA.	3452/00	NA	
138	114	MAH	431A	PFS-BURN-103 EXH REL. HUMIDITY	60%RH																																	X		Instantaneous alarm. Ref: ANAP1110PAS.	3451/10	NA	
139	114	MSHH	431A	PFS-BURN-103 EXH REL. HUMIDITY	80%RH																																			Instantaneous alarm. Ref: ANAP1110PAS. See NOTE 8.	3420/00	TBD	
140	114	XS	431A	PFS-BURN-103 EXH MOIST ANALYZER	MALF	X																																		On time delay. Remove instrument from ROHA calculation if it is the active unit. See NOTE 8.	3420/04	NA	
141	114	MAH	431B	PFS-BURN-103 EXH REL. HUMIDITY	60%RH																																	X		Instantaneous alarm. Ref: ANAP1110PAS.	3451/12	NA	
142	114	MSHH	431B	PFS-BURN-103 EXH REL. HUMIDITY	80%RH																																			Instantaneous alarm. Ref: ANAP1110PAS. See NOTE 8.	3420/02	TBD	
143	114	XS	431B	PFS-BURN-103 EXH MOIST ANALYZER	MALF	X																																		On time delay. Remove instrument from ROHA calculation if it is the active unit. See NOTE 8.	3420/06	NA	
144	114	MAH	431C	PFS-BURN-103 EXH REL. HUMIDITY	52%RH																																	X		ROHA. Ref: ANAP1110PAS.	TBD	NA	
145	114	MAHH	431C	PFS-BURN-103 EXH REL. HUMIDITY	55%RH																																			ROHA. Ref: ANAP1110PAS. See NOTE 8.	TBD	NA	
146	114	PDAH	440A	PFS-FILT-111 PREFILTER BANK	2.0 in wc																																	X		SP per RFI S-ALL-232.	3450/00	NA	
147	114	PDAH	440B	PFS-FILT-111 1st HEPA FILTER BANK	4.0 in wc																																	X		SP per RFI S-ALL-232.	3450/02	NA	
148	114	PDAH	440C	PFS-FILT-111 1st CARBON FILT BANK	3.5 in wc																																	X		SP per RFI S-ALL-232.	3450/04	NA	
149	114	PDAH	440D	PFS-FILT-111 2nd CARBON FILT BANK	3.5 in wc																																	X		SP per RFI S-ALL-232.	3450/06	NA	
150	114	PDAH	440E	PFS-FILT-111 2nd HEPA FILTER BANK	4.0 in wc																																	X		SP per RFI S-ALL-232.	3450/10	NA	
151	114	PDAH	440F	PFS-FILT-111 OVERALL DP	16 in wc																																	X		SP per RFI S-ALL-232.	3450/12	NA	
152	114	PDAH	442A	PFS-FILT-112 PREFILTER BANK	2.0 in wc																																	X		SP per RFI S-ALL-232.	3450/14	NA	
153	114	PDAH	442B	PFS-FILT-112 1st HEPA FILTER BANK	4.0 in wc																																	X		SP per RFI S-ALL-232.	3450/16	NA	
154	114	PDAH	442C	PFS-FILT-112 1st CARBON FILT BANK	3.5 in wc																																	X		SP per RFI S-ALL-232.	3451/00	NA	
155	114	PDAH	442D	PFS-FILT-112 2nd CARBON FILT BANK	3.5 in wc																																	X		SP per RFI S-ALL-232.	3451/02	NA	
156	114	PDAH	442E	PFS-FILT-112 2nd HEPA FILTER BANK	4.0 in wc																																	X		SP per RFI S-ALL-232.	3451/04	NA	
157	114	PDAH	442F	PFS-FILT-112 OVERALL DP	16 in wc																																	X		SP per RFI S-ALL-232.	3451/06	NA	
158	114	ZS	449B	PFS-FILT-111/112 BYPASS DAMPER	NOT CLOSED																																			Based on Oct 2000 PAS/PFS mtg., this is not an agent feed permissive as stated on AN-6-D-524 Note 4.	3461/14	NA	
159	114	PDAH	511	PFS-COOL-115B CLEAN LIQ COOLER	**45 psid**																																	X		SP per RFI S-ALL-232.	0850/06	NA	CH 7
160	114	PDAL	511	PFS-COOL-115B CLEAN LIQ COOLER	**20 psid**																																	X		SP per RFI S-ALL-232.	0850/04	NA	CH 7
161	114	PDAH	540	PFS-COOL-115C CLEAN LIQ COOLER	**45 psid**																																	X		SP per RFI S-ALL-232.	3050/04	NA	CH 7

CH 6

ANCDF DEACTIVATION FURNACE SYSTEM (DFS) POLLUTION ABATEMENT SYSTEM (PAS) AND PAS FILTER SYSTEM (PFS)

ANCDF DFS PAS/PFS — ALARM AND INTERLOCK MATRIX — **ANCDF DFS PAS/PFS**

P&IDs: AN-6-D-506,-507, -508, -509, -523, -524,-527, -530, and -531 ; PLC: ICS-CONR-112; INTERLOCK: I-10

B8:010/: F00 - SPARE; F01 - CLOSE ISOLATION VALVES; F02 - SHUTDOWN KILN LUBE OIL; F03 - SHUTDOWN HEATED DISCHARGE CONVEYOR; F04 - SHUTDOWN HEATED DISCHARGE CONVEYOR HEATERS; F05 - SHUTDOWN KILN DRIVE; F06 - OSCILLATE KILN DRIVE; F07 - SHUTDOWN AFTERBURNER COMBUSTION AIR BLOWER; F10 - SHUTDOWN AFTERBURNER #2; F11 - SHUTDOWN AFTERBURNER #1; F12 - SHUTDOWN KILN COMBUSTION AIR BLOWER; F13 - SHUTDOWN KILN BURNER; F14 - CLOSE KILN SHROUD DAMPERS; F15 - OPEN KILN SHROUD DAMPERS; F16 - SPARE; F17 - STOP FEED; MALFUNCTION

B8:011/: P17 - S/D PFS-COOL-115A FAN B (NOTE 1); P16 - S/D PFS-COOL-115A FAN A (NOTE 1); P15 - SD PFS-COOL-115B FAN B (NOTE 1); P14 - S/D PFS-COOL-115B FAN A (NOTE 1); P13 - S/D MIST ELIM WATER RETURN PUMP; P12 - SWITCHOVER BRINE PUMP TO BACKUP (NOTE 1); P11 - SWITCHOVER CL LIQ PUMP TO BACKUP (NOTE 1); P10 - BYPASS CARBON FILTER (NOTE 1); P07 - S/D BRINE PUMPS; P06 - S/D CLEAN LIQUOR PUMPS; P05 - S/D PFS-COOL-115C FAN B (NOTE 1); P04 - S/D PFS-COOL-115C FAN A (NOTE 1); P03 - S/D PFS-COOL-115D FAN B (NOTE 1); P02 - S/D PFS-COOL-115D FAN A (NOTE 1); P01 - S/D IST STAGE ID FAN; P00 - S/D 2ND STAGE ID FAN; PREALARM; ALERT

ITEM NUM	TAG NUMBER	DESCRIPTION	SET POINT	B8:010/ 17	16	15	14	13	12	11	10	07	06	05	04	03	02	01	00	B8:011/ 17	16	15	14	13	12	11	10	07	06	05	04	03	02	01	00	ALERT	REMARKS	ALARM BIT B001:XX/XX	MASK WORD B8:XX	
162	114 PDAL 540	PFS-COOL-115C CLEAN LIQ COOLER	**20 psid**																																	X	SP per RFI S-ALL-232.	3051/04	NA	CH 7
163	114 TAH 559	PFS-COOL-115C CLEAN LIQ COOLER	135°F																																	X	SP per RFI S-ALL-232.	3050/00	NA	
164	114 TAL 559	PFS-COOL-115C CLEAN LIQ COOLER	100°F																											X	X						SP per RFI S-ALL-232. Instant alarm, 120-sec delay for cooler S/D (see FAWB Note B-20).	3051/00	NA	
165	114 XSH 560	PFS-COOL-115C FAN B VIBRATION	See NOTE 6																																	X	5 sec delay (vendor info shows additional hardwired startup time delay relay)	3020/02	NA	
166	114 XSHH 561	PFS-COOL-115C FAN B VIBRATION	See NOTE 6																											X							5 sec delay (vendor info shows additional hardwired startup time delay relay)	3020/12	NA	
167	114 XSH 563	PFS-COOL-115C FAN A VIBRATION	See NOTE 6																																	X	5 sec delay (vendor info shows additional hardwired startup time delay relay)	3020/00	NA	
168	114 XSHH 564	PFS-COOL-115C FAN A VIBRATION	See NOTE 6																												X						5 sec delay (vendor info shows additional hardwired startup time delay relay)	3020/10	NA	
169	114 SAH 565A	PFS-COOL-115C FAN B SPEED	**1750 rpm**																																	**X**	SP per RFI S-ALL-232 (66Hz = 1980 rpm).	3050/12	NA	CH 6
170	114 SAH 566A	PFS-COOL-115C FAN A SPEED	**1750 rpm**																																	**X**	SP per RFI S-ALL-232 (66Hz = 1980 rpm).	3050/10	NA	CH 6
171	114 XA 570	PFS-COOL-115C FAN B	TROUBLE																											X							5 sec delay. Alarm generated by XSHH-561 or VFD in fault lockout. VFD internally configured to stop motor (see RFI C-PBCDF-002).	3021/02	NA	
172	114 XA 572	PFS-COOL-115C FAN A	TROUBLE																												X						5 sec delay. Alarm generated by XSHH-564 or VFD in fault lockout. VFD internally configured to stop motor (see RFI C-PBCDF-002).	3021/00	NA	
173	114 TAH 578	PFS-COOL-115B CLEAN LIQ COOLER	135°F																																	X	SP per RFI S-ALL-232.	0850/16	NA	
174	114 TAL 578	PFS-COOL-115B CLEAN LIQ COOLER	100°F																			X	X														SP per RFI S-ALL-232. Instant alarm, 120-sec delay for cooler S/D (see FAWB Note B-20).	0850/14	NA	
175	114 XSH 579	PFS-COOL-115B FAN B VIBRATION	See NOTE 6																																	X	5 sec delay (vendor info shows additional hardwired startup time delay relay)	0820/06	NA	
176	114 XSHH 580	PFS-COOL-115B FAN B VIBRATION	See NOTE 6																			X															5 sec delay (vendor info shows additional hardwired startup time delay relay)	0820/16	NA	
177	114 XSH 581	PFS-COOL-115B FAN A VIBRATION	See NOTE 6																																	X	5 sec delay (vendor info shows additional hardwired startup time delay relay)	0820/04	NA	
178	114 XSHH 592	PFS-COOL-115B FAN A VIBRATION	See NOTE 6																				X														5 sec delay (vendor info shows additional hardwired startup time delay relay)	0820/14	NA	
179	114 SAH 593A	PFS-COOL-115B FAN B SPEED	**1750 rpm**																																	**X**	SP per RFI S-ALL-232 (66Hz = 1980 rpm).	0851/06	NA	CH 6
180	114 SAH 594A	PFS-COOL-115B FAN A SPEED	**1750 rpm**																																	**X**	SP per RFI S-ALL-232 (66Hz = 1980 rpm).	0851/04	NA	CH 6

ANCDF DEACTIVATION FURNACE SYSTEM (DFS) POLLUTION ABATEMENT SYSTEM (PAS) AND PAS FILTER SYSTEM (PFS)

ANCDF DFS PAS/PFS — ALARM AND INTERLOCK MATRIX — **ANCDF DFS PAS/PFS**

P&IDs: AN-6-D-506,-507, -508, -509, -523, -524,-527, -530, and -531 ; PLC: ICS-CONR-112; INTERLOCK: I-10

B8:010/

ITEM NUM	TAG NUMBER			DESCRIPTION	SET POINT	F00 - SPARE	F01 - CLOSE ISOLATION VALVES	F02 - SHUTDOWN KILN LUBE OIL	F03 - SHUTDOWN HEATED DISCHARGE CONVEYOR	F04 - SHUTDOWN HEATED DISCHARGE CONVEYOR HEATERS	F05 - SHUTDOWN KILN DRIVE	F06 - OSCILLATE KILN DRIVE	F07 - SHUTDOWN AFTERBURNER COMBUSTION AIR BLOWER	F10 - SHUTDOWN AFTERBURNER #2	F11 - SHUTDOWN AFTERBURNER #1	F12 - SHUTDOWN KILN COMBUSTION AIR BLOWER	F13 - SHUTDOWN KILN BURNER	F14 - CLOSE KILN SHROUD DAMPERS	F15 - OPEN KILN SHROUD DAMPERS	F16 - SPARE	F17 - STOP FEED	MALFUNCTION
						17	16	15	14	13	12	11	10	07	06	05	04	03	02	01	00	
181	114	XA	598	PFS-COOL-115B FAN B	TROUBLE																	
182	114	XA	600	PFS-COOL-115B FAN A	TROUBLE																	
183	114	TAH	608	PFS-COOL-115A CLEAN LIQ COOLER	135°F																	
184	114	TAL	608	PFS-COOL-115A CLEAN LIQ COOLER	100°F																	
185	114	XSH	609	PFS-COOL-115A FAN B VIBRATION	See NOTE 6																	
186	114	XSHH	610	PFS-COOL-115A FAN B VIBRATION	See NOTE 6																	
187	114	XSH	611	PFS-COOL-115A FAN A VIBRATION	See NOTE 6																	
188	114	XSHH	612	PFS-COOL-115A FAN A VIBRATION	See NOTE 6																	
189	114	SAH	613A	PFS-COOL-115A FAN B SPEED	**1750 rpm**																	
190	114	SAH	614A	PFS-COOL-115A FAN A SPEED	**1750 rpm**																	
191	114	PDAH	615	PFS-COOL-115A CLEAN LIQ COOLER	**45 psid**																	
192	114	PDAL	615	PFS-COOL-115A CLEAN LIQ COOLER	**20 psid**																	
193	114	XA	623	PFS-COOL-115A FAN B	TROUBLE																	
194	114	XA	625	PFS-COOL-115A FAN A	TROUBLE																	
195	114	XA	780	PFS-BURN-103 BURNER TROUBLE S/D	LOCKOUT		X															
196	114	TISH	874	PFS-BURN-103 EXHAUST TEMP	168°F																	
197	114	TSHH	874	PFS-BURN-103 EXHAUST TEMP	176°F																	
198	MON	ACAM	129	ACAMS COMMON STACK	NOTE 5		X															

B8:011/

ITEM NUM	P17 - S/D PFS-COOL-115A FAN B (NOTE 1)	P16 - S/D PFS-COOL-115A FAN A (NOTE 1)	P15 - SD PFS-COOL-115B FAN B (NOTE 1)	P14 - S/D PFS-COOL-115B FAN A (NOTE 1)	P13 - S/D MIST ELIM WATER RETURN PUMP	P12 - SWITCHOVER BRINE PUMP TO BACKUP (NOTE 1)	P11 - SWITCHOVER CL LIQ PUMP TO BACKUP (NOTE 1)	P10 - BYPASS CARBON FILTER (NOTE 1)	P07 - S/D BRINE PUMPS	P06 - S/D CLEAN LIQUOR PUMPS	P05 - S/D PFS-COOL-115C FAN B (NOTE 1)	P04 - S/D PFS-COOL-115C FAN A (NOTE 1)	P03 - S/D PFS-COOL-115D FAN B (NOTE 1)	P02 - S/D PFS-COOL-115D FAN A (NOTE 1)	P01 - S/D IST STAGE ID FAN	P00 - S/D 2ND STAGE ID FAN	PREALARM	ALERT	REMARKS	ALARM BIT B001:XX/XX	MASK WORD B8:XX	
	17	16	15	14	13	12	11	10	07	06	05	04	03	02	01	00						
181			X																5 sec delay. Alarm generated by XSHH-580 or VFD in fault lockout. VFD internally configured to stop motor (see RFI C-PBCDF-002).	0821/06	NA	
182				X															5 sec delay. Alarm generated by XSHH-592 or VFD in fault lockout. VFD internally configured to stop motor (see RFI C-PBCDF-002).	0821/04	NA	
183																	X		SP per RFI S-ALL-232.	0850/12	NA	
184	X	X																	SP per RFI S-ALL-232. Instant alarm, 120-sec delay for cooler S/D (see FAWB Note B-20).	0850/10	NA	
185																	X		5 sec delay (vendor info shows additional hardwired startup time delay relay)	0820/02	NA	
186	X																		5 sec delay (vendor info shows additional hardwired startup time delay relay)	0820/12	NA	
187																	X		5 sec delay (vendor info shows additional hardwired startup time delay relay)	0820/00	NA	
188		X																	5 sec delay (vendor info shows additional hardwired startup time delay relay)	0820/10	NA	
189																	**X**		SP per RFI S-ALL-232 (66Hz = 1980 rpm).	0851/02	NA	CH 6
190																	**X**		SP per RFI S-ALL-232 (66Hz = 1980 rpm).	0851/00	NA	CH 6
191																	X		SP per RFI S-ALL-232.	0850/02	NA	CH 7
192																	X		SP per RFI S-ALL-232.	0850/00	NA	CH 7
193	X																		5 sec delay. Alarm generated by XSHH-610 or VFD in fault lockout. VFD internally configured to stop motor (see RFI C-PBCDF-002).	0821/02	NA	
194		X																	5 sec delay. Alarm generated by XSHH-612 or VFD in fault lockout. VFD internally configured to stop motor (see RFI C-PBCDF-002).	0821/00	NA	
195																			Per Oct 2000 PAS/PFS review mtg., stop feed only if carbon filter unit is online.	3421/00	TBD	
196																	X		On time delay. SP per DSIC.	3420/12	NA	
197																			On time delay. S/D PFS-BURN-103. SP per DSIC.	3420/14	NA	
198																			RCRA AWFCO. Stop feed for DFS, LIC, and MPF.	2620/16	240	

ANCDF DEACTIVATION FURNACE SYSTEM (DFS) POLLUTION ABATEMENT SYSTEM (PAS) AND PAS FILTER SYSTEM (PFS)

ANCDF DFS PAS/PFS — ALARM AND INTERLOCK MATRIX — **ANCDF DFS PAS/PFS**

P&IDs: AN-6-D-506,-507, -508, -509, -523, -524,-527, -530, and -531 ; PLC: ICS-CONR-112; INTERLOCK: I-10

F00 - SPARE
F01 - CLOSE ISOLATION VALVES
F02 - SHUTDOWN KILN LUBE OIL
F03 - SHUTDOWN HEATED DISCHARGE CONVEYOR
F04 - SHUTDOWN HEATED DISCHARGE CONVEYOR HEATERS
F05 - SHUTDOWN KILN DRIVE
F06 - OSCILLATE KILN DRIVE
F07 - SHUTDOWN AFTERBURNER COMBUSTION AIR BLOWER
F10 - SHUTDOWN AFTERBURNER #2
F11 - SHUTDOWN AFTERBURNER #1
F12 - SHUTDOWN KILN COMBUSTION AIR BLOWER
F13 - SHUTDOWN KILN BURNER
F14 - CLOSE KILN SHROUD DAMPERS
F15 - OPEN KILN SHROUD DAMPERS
F16 - SPARE
F17 - STOP FEED
MALFUNCTION

P17 - S/D PFS-COOL-115A FAN B (NOTE 1)
P16 - S/D PFS-COOL-115A FAN A (NOTE 1)
P15 - SD PFS-COOL-115B FAN B (NOTE 1)
P14 - S/D PFS-COOL-115B FAN A (NOTE 1)
P13 - S/D MIST ELIM WATER RETURN PUMP
P12 - SWITCHOVER BRINE PUMP TO BACKUP (NOTE 1)
P11 - SWITCHOVER CL LIQ PUMP TO BACKUP (NOTE 1)
P10 - BYPASS CARBON FILTER (NOTE 1)
P07 - S/D BRINE PUMPS
P06 - S/D CLEAN LIQUOR PUMPS
P05 - S/D PFS-COOL-115C FAN B (NOTE 1)
P04 - S/D PFS-COOL-115C FAN A (NOTE 1)
P03 - S/D PFS-COOL-115D FAN B (NOTE 1)
P02 - S/D PFS-COOL-115D FAN A (NOTE 1)
P01 - S/D IST STAGE ID FAN
P00 - S/D 2ND STAGE ID FAN
PREALARM
ALERT CH 6

ITEM NUM	TAG NUMBER	DESCRIPTION	SET POINT	B8:010/ 17	16	15	14	13	12	11	10	07	06	05	04	03	02	01	00	B8:011/ 17	16	15	14	13	12	11	10	07	06	05	04	03	02	01	00	REMARKS	ALARM BIT B001:XX/XX	MASK WORD B8:XX
199	MON ACAM 129	ACAMS COMMON STACK	MALF	X	X																															RCRA AWFCO. Stop feed for DFS, LIC, and MPF.	2620/16	240
200	MON ACAM 129	ACAMS COMMON STACK	OFFLINE		X																															RCRA AWFCO. Stop feed for DFS, LIC, and MPF.	2620/16	240
201	MON ACAM 129	ACAMS COMMON STACK	NOT STAGGERED		X																															RCRA AWFCO. Stop feed for DFS, LIC, and MPF.	2620/16	240
202	MON ACAM 183	ACAMS DFS PAS	NOTE 5		X																															RCRA AWFCO.	2620/06	132
203	MON ACAM 183	ACAMS DFS PAS	MALF	X	X																															RCRA AWFCO.	2620/06	132
204	MON ACAM 183	ACAMS DFS PAS	OFFLINE		X																															RCRA AWFCO.	2620/06	132
205		**BOTH BRINE PUMPS OFF**	**NA**					**X**		**X**	**X**																									**ALARM ACTIVE IF BOTH PUMPS OFF FOR MORE THAN 8 SEC.**	**1805/02**	**290**
206		BRA TANKS LVL HI-HI / UNAVAILABLE	DICO		X																															RCRA AWFCO DFS 27. See BRA FAWB for tag #s and setpoints.	B4:23/01	210

CH 6

NOTE 1: P02, P03, P04, P05, P10, P11, P12, P14, P15, P16, and P17 responses are not part of the deathwish relay. These responses are included as column headings for presentation clarity.
NOTE 2: The ANCDF DFS CEMS alarm configuration is based on discussions held at ANCDF in Sept 2000. ANCDF will have redundant RCRA CO and O2 monitors and a TSCA CO2 monitor at the DFS afterburner exhaust. In addition they will have a single process O2 monitor at the kiln exhaust, and single process CO and O2 monitors at the ID fans. The ID fan CEMS will not have CON alarmsassociated with them. The referenced code and RFI S-ALL-249 do not reflect this configuration. ANCDF will revise the code to match.
NOTE 3: AWFCO alarm setpoints reflect the proposed normal operational setpoints submitted to ADEM for STB.
NOTE 4: 24-LSHHH-032 additional interlocks: 1) close 24-XV-026 and inhibit timer activation, 2) close 24-XY-380B/D, 3) close 24-XY-382B/D. Also when controllers are in AUTO, 1) close 24-LV-031, 2) close 24-LV-010, 3) close 24-AV-034, 4) close 24-AV-007.
NOTE 5: Per Sept 2000 ANCDF discussions, ACAMS RCRA AWFCO setpoints will be 0.2 ASC (ROHA) and 1.0 ASC (instantaneous). A prealarm at 0.2 ASC (instantaneous) will also be provided. Allowable stack concentration (ASC) for chemical agent are (mg/m3): GB= 0.0003, H/HD/HT= 0.03, and VX=0.0003.
NOTE 6: After the Oct 2000 AN PAS/PFS review meeting, the DSIC investigated the clean liquor air cooler vibration alarm setpoints. They found that the Murphy vibration switches are set by turning an uncalibrated screw. Specific vibration units could not be determined. The high vibration switch is set by turning the screw 1/4 turn past its start-up trip point and the high-high switch is set by turning the screw 1/2 turn past its start-up trip point.
NOTE 7: PAS exhaust blower vibration alarms reflect the current design. Per RFI C-ANCDF-005, the blower foundation design requires that the foundation vibration be < 1 mil double amplitude. This requirment was the basis for recommended setpoints in RFI S-ALL-0232. The vibration alarm setpoints may be changed, or new alarms added, to meet the foundation vibration design limits.
NOTE 8: At the Oct 2000 ANCDF PAS/PFS review meetings, the ANCDF SC stated that there would be no stop feed interlocks associated with the moisture analyzer alarms. ECP ANAP1110PAS, however, modified AN-6-D-524 Note 13 to state that the MSHH/MAHH alarms would generate a stop feed. The ANCDF A&I matrices reflect the SC's current position, but can be updated if ANCDF implements the design configuration.

ANCDF LIQUID INCINERATOR (LIC) POLLUTION ABATEMENT SYSTEM (PAS) AND PAS FILTER SYSTEM (PFS)

ANCDF LIC PAS/PFS — ALARM AND INTERLOCK MATRIX — **ANCDF LIC PAS/PFS**

P&IDs: AN-1-D-547/1, AN-6-D-502, -507, -511, -512, -517, -523, -525, and -529; PLC: ICS-CONR-114; INTERLOCK: I-22

B8:010/

17	16	15	14	13	12	11	10	07	06	05	04	03	02	01	00
F00 - SPARE	F01 - SPARE	F02 - SPARE	F03 - SPARE	F04 - S/D AGENT PUMPS	F05 - LOCKOUT SECONDARY BURNER (NOTE 1)	F06 - LOCKOUT PRIMARY BURNER (NOTE 1)	F07 - INHIBIT FUEL OIL PURGE OF AGENT LINE	F10 - S/D SEC COMB AIR BLOWER	F11 - S/D PRI COMB AIR BLOWER	F12 - SPARE	F13 - CLOSE DECON/PRW VALVE	F14 - STOP DECON FEED/SWITCH TO PRW	F15 - STOP AGENT FEED	F16 - S/D SEC BURNER	F17 - S/D PRI BURNER

B8:011/

17	16	15	14	13	12	11	10	07	06	05	04	03	02	01	00
P17 - SHUTDOWN PFS-COOL-213A FAN B (NOTE 1)	P16 - SHUTDOWN PFS-COOL-213A FAN A (NOTE 1)	P15 - SHUTDOWN PFS-COOL-213B FAN B (NOTE 1)	P14 - SHUTDOWN PFS-COOL-213B FAN A (NOTE 1)	P13 - OPEN QUENCH EMERG. PRW (NOTE 1)	P12 - S/D WATER RETURN PUMP	P11 - BKUP BRINE PUMP ON (NOTE 1)	P10 - BKUP CLEAN LIQ PUMP ON (NOTE 1)	P07 - SPARE	P06 - S/D BRINE PUMPS	P05 - S/D CLEAN LIQUOR PUMPS	P04 - S/D 1ST & 2ND STAGE ID FAN	P03 - SPARE	P02 - BYPASS CARBON FILTER (NOTE 1)	P01 - S/D IST STAGE ID FAN	P00 - S/D 2ND STAGE ID FAN

ITEM NUM	TAG NUMBER			DESCRIPTION		SET POINT	MALFUNCTION	PREALARM	ALERT	REMARKS	ALARM BIT B001:XX/XX	MASK WORD B8:XX	
1	13	AAH	778A	SEC CHMBR	EXHAUST CO	160 ppm			X	Instantaneous alarm. Corrected to 7% O2 dry basis. See NOTE 2.	TBD	NA	
2	13	AAHH	778A	SEC CHMBR	EXHAUST CO	200 ppm				Instantaneous alarm. Corrected to 7% O2 dry basis. See NOTE 2.	TBD	TBD	
3	13	HS	778A/B	BOTH LIC PAS CO ANALYZERS IN CAL		In Calib				See NOTE 2.	1222/06	246	
4	13	MSH	778A	AB EXH CO ANALYZER MOISTURE		39%			X	Setpoint is design value. Vendor-supplied switch has span of only 0-25%. See NOTE 2.	TBD	NA	
5	13	XS	778A	SEC CHMBR	EXHAUST CO	MALF	X			Stop feed on malfuntion alarm only if 13-AIT-778B is also in malfunction or is in "calibrate" mode. Alarm active only when combined fuel flow to primary and secondary > 100 scfm. See NOTE 2.	1020/14 1222/12	62	
6	13	AAH	778B	SEC CHMBR	EXHAUST CO	160 ppm			X	Instantaneous alarm. Corrected to 7% O2 dry basis. See NOTE 2.	TBD	NA	
7	13	AAHH	778B	SEC CHMBR	EXHAUST CO	200 ppm				Instantaneous alarm. Corrected to 7% O2 dry basis. See NOTE 2.	TBD	TBD	
8	13	MSH	778B	AB EXH CO ANALYZER MOISTURE		39%			X	Setpoint is design value. Vendor-supplied switch has span of only 0-25%. See NOTE 2.	TBD	NA	
9	13	XS	778B	SEC CHMBR	EXHAUST CO	MALF	X			Stop feed on malfuntion alarm only if 13-AIT-778A is also in malfunction or is in "calibrate" mode. Alarm active only when combined fuel flow to primary and secondary > 100 scfm. See NOTE 2.	TBD	TBD	
10	13	AAH	**778C**	SEC CHMBR	EXHAUST CO	90 ppm			X	1 hr rolling average. Corrected to 7% O2 dry basis. See NOTE 2.	TBD	NA	CH 6
11	13	AAHH	778C	SEC CHMBR	EXHAUST CO	100 ppm				RCRA AWFCO LIC 08. Corrected to 7% O2, dry basis, 1 hr rolling avg. See NOTEs 2 & 3.	TBD	TBD	
12	13	AAH	798A	SEC CHMBR	EXHAUST O2	12% O2			X	Corrected to dry basis. See NOTE 2.	TBD	NA	
13	13	AAHH	798A	SEC CHMBR	EXHAUST O2	15% O2				RCRA AWFCO LIC 09. Corrected to dry basis. See NOTEs 2 & 3.	**1054/00**	34	CH 6
14	13	AAL	798A	SEC CHMBR	EXHAUST O2	6% O2			X	Corrected to dry basis. See NOTE 2.	**1054/06**	NA	CH 6
15	13	AALL	798A	SEC CHMBR	EXHAUST O2	3% O2				RCRA AWFCO LIC 10. Corrected to dry basis. See NOTEs 2 & 3.	**1054/10**	34	CH 6
16	13	XS	798A	SEC CHMBR	EXHAUST O2	MALF	X			Stop feed on malfuntion alarm only if 13-AIT-798B is also in malfunction or is in "calibrate" mode. See NOTE 2.	1021/14 1222/10	36	

ANCDF LIQUID INCINERATOR (LIC) POLLUTION ABATEMENT SYSTEM (PAS) AND PAS FILTER SYSTEM (PFS)

ANCDF LIC PAS/PFS — ALARM AND INTERLOCK MATRIX — **ANCDF LIC PAS/PFS**

P&IDs: AN-1-D-547/1, AN-6-D-502, -507, -511, -512, -517, -523, -525, and -529; PLC: ICS-CONR-114; INTERLOCK: I-22

B8:010/: F00 - SPARE; F01 - SPARE; F02 - SPARE; F03 - SPARE; F04 - S/D AGENT PUMPS; F05 - LOCKOUT SECONDARY BURNER (NOTE 1); F06 - LOCKOUT PRIMARY BURNER (NOTE 1); F07 - INHIBIT FUEL OIL PURGE OF AGENT LINE; F10 - S/D SEC COMB AIR BLOWER; F11 - S/D PRI COMB AIR BLOWER; F12 - SPARE; F13 - CLOSE DECON/PRW VALVE; F14 - STOP DECON FEED/SWITCH TO PRW; F15 - STOP AGENT FEED; F16 - S/D SEC BURNER; F17 - S/D PRI BURNER; MALFUNCTION

B8:011/: P17 - SHUTDOWN PFS-COOL-213A FAN B (NOTE 1); P16 - SHUTDOWN PFS-COOL-213A FAN A (NOTE 1); P15 - SHUTDOWN PFS-COOL-213B FAN B (NOTE 1); P14 - SHUTDOWN PFS-COOL-213B FAN A (NOTE 1); P13 - OPEN QUENCH EMERG. PRW (NOTE 1); P12 - S/D WATER RETURN PUMP; P11 - BKUP BRINE PUMP ON (NOTE 1); P10 - BKUP CLEAN LIQ PUMP ON (NOTE 1); P07 - SPARE; P06 - S/D BRINE PUMPS; P05 - S/D CLEAN LIQUOR PUMPS; P04 - S/D 1ST & 2ND STAGE ID FAN; P03 - SPARE; P02 - BYPASS CARBON FILTER (NOTE 1); P01 - S/D IST STAGE ID FAN; P00 - S/D 2ND STAGE ID FAN; PREALARM; ALERT

ITEM NUM	TAG NUMBER			DESCRIPTION		SET POINT	17	16	15	14	13	12	11	10	07	06	05	04	03	02	01	00	17	16	15	14	13	12	11	10	07	06	05	04	03	02	01	00		REMARKS	ALARM BIT B001:XX/XX	MASK WORD B8:XX	
17	13	HS	798A/B	BOTH LIC PAS O2 ANALYZERS IN CAL		In Calib			X	X					X																										See NOTE 2.	1222/04	244	
18	13	AAH	798B	SEC CHMBR	EXHAUST O2	12% O2																																	X		Corrected to dry basis. See NOTE 2.	TBD	NA	
19	13	AAHH	798B	SEC CHMBR	EXHAUST O2	15% O2			X	X					X																										RCRA AWFCO LIC 09. Corrected to dry basis. See NOTEs 2 & 3.	**1053/00**	TBD	CH 6
20	13	AAL	798B	SEC CHMBR	EXHAUST O2	6% O2																																	X		Corrected to dry basis. See NOTE 2.	TBD	NA	
21	13	AALL	798B	SEC CHMBR	EXHAUST O2	3% O2			X	X					X																										RCRA AWFCO LIC 10. Corrected to dry basis. See NOTEs 2 & 3.	**1053/10**	TBD	CH 6
22	13	XS	798B	SEC CHMBR	EXHAUST O2	MALF	X		X	X					X																										Stop feed on malfuntion alarm only if 13-AIT-798A is also in malfunction or is in "calibrate" mode. See NOTE 2.	TBD	TBD	
23	24	LAH	161	SPARE MIST ELIM.	SUMP	18 in																																			SP per AN-6-D-512 for LAH-864. Start PAS-PUMP-222 (see FAWB Note B-17). Alarm not shown on AN-6-D-502.	0850/02	NA	
24	24	LAHH	161	SPARE MIST ELIM.	SUMP	20 in																																			SP per AN-6-D-512 for LAHH-864. Alarm not shown on AN-6-D-502.	0850/04	NA	
25	24	LAL	161	SPARE MIST ELIM.	SUMP	10 in																																	X		SP per AN-6-D-512 for LAL-864. Alarm not shown on AN-6-D-502.	0850/00	NA	
26	24	LSLL	162	SPARE MIST ELIM.	SUMP	8 in																						X													3 sec delay. SP per AN-6-D-502. Alarm active when 24-HS-864 selected to LIC spare mist eliminator. Hardwired S/D of pump needs to be disabled when 24-HS-864 is aligned to the LIC (Note 24-HS-864 is not shown on P&ID).	0820/00	86	
27	24	LSHH	163	SPARE MIST ELIM.	SUMP	66 in																																			3 sec delay. SP per AN-6-D-502. Input to PAS NORMAL relay.	0820/02	NA	
28	24	PDAH	164	SPARE MIST ELIM.	CANDLES DP	15 in wc																																	X			0850/06	NA	
29	24	PDAHH	164	SPARE MIST ELIM.	CANDLES DP	20 in wc			X	X					X																											0850/10	148	
30	24	TAH	276	CLEAN LIQUOR	TO SCRUBBER	128°F																																	X		SP per RFI S-ALL-232.	1652/12	NA	
31	24	TAHH	276	CLEAN LIQUOR	TO SCRUBBER	143°F			X	X					X																										Refs: RFI S-ALL-232 & ANAP1110PAS.	1652/10	NA	
32	24	TAL	276	CLEAN LIQUOR	TO SCRUBBER	100°F																																		X	SP per RFI S-ALL-232.	1652/14	NA	CH 6
33	24	FAH	278	PAS-SCRB-203 CAUSTIC ADDITION		SP + 20%																																		X	Alarm active in flow control mode only. SP = controller setpoint. SP and response per Oct 2000 PAS/PFS review mtg	1653/00	NA	CH 6
34	24	FAL	278	PAS-SCRB-203 CAUSTIC ADDITION		SP - 20%																																	X		Alarm active in flow control mode only. SP = controller setpoint. SP and response per Oct 2000 PAS/PFS review mtg	1652/16	NA	

ANCDF LIQUID INCINERATOR (LIC) POLLUTION ABATEMENT SYSTEM (PAS) AND PAS FILTER SYSTEM (PFS)

ANCDF LIC PAS/PFS — ALARM AND INTERLOCK MATRIX — **ANCDF LIC PAS/PFS**

P&IDs: AN-1-D-547/1, AN-6-D-502, -507, -511, -512, -517, -523, -525, and -529; PLC: ICS-CONR-114; INTERLOCK: I-22

B8:010/: F00 - SPARE; F01 - SPARE; F02 - SPARE; F03 - SPARE; F04 - S/D AGENT PUMPS; F05 - LOCKOUT SECONDARY BURNER (NOTE 1); F06 - LOCKOUT PRIMARY BURNER (NOTE 1); F07 - INHIBIT FUEL OIL PURGE OF AGENT LINE; F10 - S/D SEC COMB AIR BLOWER; F11 - S/D PRI COMB AIR BLOWER; F12 - SPARE; F13 - CLOSE DECON/PRW VALVE; F14 - STOP DECON FEED/SWITCH TO PRW; F15 - STOP AGENT FEED; F16 - S/D SEC BURNER; F17 - S/D PRI BURNER; MALFUNCTION

B8:011/: P17 - SHUTDOWN PFS-COOL-213A FAN B (NOTE 1); P16 - SHUTDOWN PFS-COOL-213A FAN A (NOTE 1); P15 - SHUTDOWN PFS-COOL-213B FAN B (NOTE 1); P14 - SHUTDOWN PFS-COOL-213B FAN A (NOTE 1); P13 - OPEN QUENCH EMERG. PRW (NOTE 1); P12 - S/D WATER RETURN PUMP; P11 - BKUP BRINE PUMP ON (NOTE 1); P10 - BKUP CLEAN LIQ PUMP ON (NOTE 1); P07 - SPARE; P06 - S/D BRINE PUMPS; P05 - S/D CLEAN LIQUOR PUMPS; P04 - S/D 1ST & 2ND STAGE ID FAN; P03 - SPARE; P02 - BYPASS CARBON FILTER (NOTE 1); P01 - S/D IST STAGE ID FAN; P00 - S/D 2ND STAGE ID FAN; PREALARM; ALERT

ITEM NUM	TAG NUMBER			DESCRIPTION		SET POINT	B8:010/ 17	16	15	14	13	12	11	10	07	06	05	04	03	02	01	00	B8:011/ 17	16	15	14	13	12	11	10	07	06	05	04	03	02	01	00		REMARKS	ALARM BIT B001:XX/XX	MASK WORD B8:XX	
35	24	TSH	452A/B	1st STAGE ID FAN	BEARING TEMP	160°F																																	X	3 sec delay. SP from vendor info. Response per Oct 2000 AN PAS/PFS review mtg.	1222/16	TBD	CH 6
36	24	TSHH	452A/B	1st STAGE ID FAN	BEARING TEMP	200°F			X	X				X																							X			3 sec delay. S/D 1st stage, except when running in emergency mode. SP from vendor info. Response per Oct 2000 AN PAS/PFS review mtg.	1221/10	122	CH 6
37	24	TSH	453A/B	2nd STAGE ID FAN	BEARING TEMP	160°F																																	X	3 sec delay. SP from vendor info. Response per Oct 2000 AN PAS/PFS review mtg.	1223/00	TBD	CH 6
38	24	TSHH	453A/B	2nd STAGE ID FAN	BEARING TEMP	200°F			X	X				X																							X			3 sec delay. S/D 2nd stage, except when running in emergency mode. SP from vendor info. Response per Oct 2000 AN PAS/PFS review mtg.	1221/12	138	CH 6
39	24	PDAH	618	PAS-PUMP-131	DISCH FILTER	5.0 psid																																	X		0650/06	NA	
40	24	XAH	709	2nd STAGE ID FAN	VIBRATION	0.25 in/sec																																	X	3 sec delay. See NOTE 7.	1251/06	TBD	CH 6
41	24	XSHH	709	2nd STAGE ID FAN	VIBRATION	0.5 in/sec			X	X				X																							X			3 sec delay. S/D 2nd stage, except when running in emergency mode. See NOTE 7.	1220/06	64	CH 6
42	24	IAH	710	ID FAN	2ND STAGE MTR	**269 amp**																																	X	2-min delay on startup. SP per RFI S-ALL-232.	1250/02	96	CH 6
43	24	TSH	711A-F	2nd STAGE ID FAN	WINDING TEMP	320°F																																	X	3 sec delay. Alarm on high temp for any of 24-TSH-711A through F. SP from vendor info. Response per Oct 2000 AN PAS/PFS review mtg.	1222/14	NA	CH 6
44	24	TSHH	711A-F	2nd STAGE ID FAN	WINDING TEMP	329°F			X	X				X																							X			3 sec delay. Alarm on high-high temp for any of 24-TSHH-711A thru F. S/D 2nd stage, except when running in emergency mode. SP from vendor info. Response per Oct 2000 AN PAS/PFS review mtg.	1220/00	128	CH 6
45	24	XA	712	1st & 2nd STAGE ID FAN		NOT RUNNING		X	X	X		X	X	X																											I:313/00 I:313/02	116	
46	24	XA	713	ID FAN	2ND STAGE MTR	MALF	X			X	X				X																						X			Start I-lock for 2nd stage motor.	1263/11	120	
47	24	XA	714	2nd STAGE ID FAN	TROUBLE	Trouble				X	X				X																						X			Alarm response per RFI C-ANCDF-002. Trouble alarm initiated by ASD motor thermal overload which stops the motor.	1223/06	TBD	
48	24	SAH	714A	2nd STAGE ID FAN	SPEED	**1775 rpm**																																	X	SP per RFI S-ALL-232.	1250/16	TBD	CH 6
49	24	FISL	731	PAS MIST ELIM WTR RTN PMP SEAL		0.15 gpm																						X												3 sec delay. SP from instrument data sheet.	0620/12	NA	
50	24	XA	776	1st STAGE ID FAN	TROUBLE	Trouble				X	X				X																						X			Alarm response per RFI C-ANCDF-002. Trouble alarm initiated by ASD motor thermal overload which stops the motor.	1223/04	TBD	

ANCDF LIQUID INCINERATOR (LIC) POLLUTION ABATEMENT SYSTEM (PAS) AND PAS FILTER SYSTEM (PFS)

ANCDF LIC PAS/PFS — ALARM AND INTERLOCK MATRIX — **ANCDF LIC PAS/PFS**

P&IDs: AN-1-D-547/1, AN-6-D-502, -507, -511, -512, -517, -523, -525, and -529; PLC: ICS-CONR-114; INTERLOCK: I-22

B8:010/

F00 - SPARE
F01 - SPARE
F02 - SPARE
F03 - SPARE
F04 - S/D AGENT PUMPS
F05 - LOCKOUT SECONDARY BURNER (NOTE 1)
F06 - LOCKOUT PRIMARY BURNER (NOTE 1)
F07 - INHIBIT FUEL OIL PURGE OF AGENT LINE
F10 - S/D SEC COMB AIR BLOWER
F11 - S/D PRI COMB AIR BLOWER
F12 - SPARE
F13 - CLOSE DECON/PRW VALVE
F14 - STOP DECON FEED/SWITCH TO PRW
F15 - STOP AGENT FEED
F16 - S/D SEC BURNER
F17 - S/D PRI BURNER
MALFUNCTION

B8:011/

P17 - SHUTDOWN PFS-COOL-213A FAN B (NOTE 1)
P16 - SHUTDOWN PFS-COOL-213A FAN A (NOTE 1)
P15 - SHUTDOWN PFS-COOL-213B FAN B (NOTE 1)
P14 - SHUTDOWN PFS-COOL-213B FAN A (NOTE 1)
P13 - OPEN QUENCH EMERG. PRW (NOTE 1)
P12 - S/D WATER RETURN PUMP
P11 - BKUP BRINE PUMP ON (NOTE 1)
P10 - BKUP CLEAN LIQ PUMP ON (NOTE 1)
P07 - SPARE
P06 - S/D BRINE PUMPS
P05 - S/D CLEAN LIQUOR PUMPS
P04 - S/D 1ST & 2ND STAGE ID FAN
P03 - SPARE
P02 - BYPASS CARBON FILTER (NOTE 1)
P01 - S/D IST STAGE ID FAN
P00 - S/D 2ND STAGE ID FAN
PREALARM
ALERT

ITEM NUM	TAG NUMBER			DESCRIPTION		SET POINT	17	16	15	14	13	12	11	10	07	06	05	04	03	02	01	00	17	16	15	14	13	12	11	10	07	06	05	04	03	02	01	00	PREALARM	ALERT	REMARKS	ALARM BIT B001:XX/XX	MASK WORD B8:XX	
51	24	SAH	776A	1st STAGE ID FAN	SPEED	**1775 rpm**																																	X		SP per RFI S-ALL-232.	1250/14	TBD	CH 6
52	24	FSL	799	PAS SCRUBBER	PROCESS WATER	20 gpm																																		X	3 sec delay. SP from instrument data sheet. Active only when 24-XV-798 is energized.	1620/10	NA	CH 6
53	24	TSHH	800	PAS QUENCH	OVERHEAD	215°F			X	X					X												X															RCRA AWFCO LIC 22. SP per ANAP1110PAS. See FAWB Note B-7.	1420/00	68	
54	24	FSL	801	PAS QUENCH	PROCESS WATER	73 gpm																																	X		3 sec delay. SP from instrument data sheet. Active only when 24-TV-800 is open.	1420/02	NA	CH 6
55	24	LAH	810	PAS QUENCH	SUMP	2.0 in																																	X			1450/04	NA	
56	24	LAHH	810	PAS QUENCH	SUMP	8.0 in	X	X	X	X					X																										Shuts off brine spray to quench tower and PRW makeup to quench brine. Input to PAS NORMAL relay.	1450/02	80	
57	24	PDAH	814	PAS VENTURI	SCRUBBER	SP+10 in wc																																	X		SP=setpoint entered in controller by operator	1850/06	NA	
58	24	PDAL	814	PAS VENTURI	SCRUBBER	25 in wc																																	X			1850/04	NA	
59	24	PDALL	814	PAS VENTURI	SCRUBBER	20 in wc			X	X					X																										RCRA AWFCO LIC 17. See NOTE 3. DSIC to add I-22 interlock to AN-6-D-511.	1851/00	72	
60	24	TAH	816	PAS QUENCH TOWER OVERHEAD TEMP		200°F																																	X		(see FAWB Note B-7)	1450/10	NA	
61	24	TSHHH	817	PAS QUENCH TOWER OVERHEAD TEMP		250°F	X	X	X	X					X																										SP from instrument data sheet and ANAC849ICS. Input to PAS NORMAL relay. See FAWB Note B-7.	1420/10	98	
62	24	LAH	818	PAS SCRUBBER	BRINE SUMP	**62 in**																																	X		Prealarm per Oct 2000 PAS/PFS mtg.	1650/16	74	CH 6
63	24	LAL	818	PAS SCRUBBER	BRINE SUMP	**38 in**																																	X		Prealarm per Oct 2000 PAS/PFS mtg.	1650/14	70	CH 6
64	24	LSHH	818	PAS SCRUBBER	BRINE SUMP	**68 in**																																	X		Open 24-DV-835 (deenergize 24-LY-835)	1621/10	NA	CH 6
65	24	LSLL	818	PAS SCRUBBER	BRINE SUMP	**32 in**																																	X		Close 24-DV-835, brine to BRA (24-LY-835 energized and drive 24-DY-835 to close).	1621/12	NA	CH 6
66	24	LSHHH	819	PAS SCRUBBER	BRINE SUMP	**79 in**	X	X	X	X					X													X														3 sec delay. Input to PAS NORMAL relay (see FAWB Note B-19). See NOTE 4 for additional interlocks. Alarm response per Oct 2000 PAS/PFS mtg.	1620/02	74	CH 6
67	24	LSLLL	820	PAS SCRUBBER	SCRUBBER SUMP	**26 in**	X	X	X	X					X																	X										3 sec delay. Input to PAS NORMAL relay (see FAWB Note B-19). Alarm response per Oct 2000 PAS/PFS mtg.	1620/00	70	CH 6
68	24	LSLL	821	PAS SCRUBBER CLEAN LIQUOR SUMP		**20 in**			X	X					X																		X									3-sec delay. SP from P&ID (14 ft 0 in. minus 12 ft 0 in. offset). SP is 9 in. above bottom of chimney tray well point. Alarm response per Oct 2000 PAS/PFS mtg.	1620/12	100	CH 6
69	24	PDAH	822	PAS SCRUBBER	PACKED BED	6 in wc																																	X			1651/10	NA	
70	24	PDAH	823	PAS SCRUBBER	MIST PAD	2 in wc																																	X			1651/06	NA	

ANCDF LIQUID INCINERATOR (LIC) POLLUTION ABATEMENT SYSTEM (PAS) AND PAS FILTER SYSTEM (PFS)

ANCDF LIC PAS/PFS — ALARM AND INTERLOCK MATRIX — **ANCDF LIC PAS/PFS**

P&IDs: AN-1-D-547/1, AN-6-D-502, -507, -511, -512, -517, -523, -525, and -529; PLC: ICS-CONR-114; INTERLOCK: I-22

B8:010/

F00 - SPARE
F01 - SPARE
F02 - SPARE
F03 - SPARE
F04 - S/D AGENT PUMPS
F05 - LOCKOUT SECONDARY BURNER (NOTE 1)
F06 - LOCKOUT PRIMARY BURNER (NOTE 1)
F07 - INHIBIT FUEL OIL PURGE OF AGENT LINE
F10 - S/D SEC COMB AIR BLOWER
F11 - S/D PRI COMB AIR BLOWER
F12 - SPARE
F13 - CLOSE DECON/PRW VALVE
F14 - STOP DECON FEED/SWITCH TO PRW
F15 - STOP AGENT FEED
F16 - S/D SEC BURNER
F17 - S/D PRI BURNER
MALFUNCTION

B8:011/

P17 - SHUTDOWN PFS-COOL-213A FAN B (NOTE 1)
P16 - SHUTDOWN PFS-COOL-213A FAN A (NOTE 1)
P15 - SHUTDOWN PFS-COOL-213B FAN B (NOTE 1)
P14 - SHUTDOWN PFS-COOL-213B FAN A (NOTE 1)
P13 - OPEN QUENCH EMERG. PRW (NOTE 1)
P12 - S/D WATER RETURN PUMP
P11 - BKUP BRINE PUMP ON (NOTE 1)
P10 - BKUP CLEAN LIQ PUMP ON (NOTE 1)
P07 - SPARE
P06 - S/D BRINE PUMPS
P05 - S/D CLEAN LIQUOR PUMPS
P04 - S/D 1ST & 2ND STAGE ID FAN
P03 - SPARE
P02 - BYPASS CARBON FILTER (NOTE 1)
P01 - S/D IST STAGE ID FAN
P00 - S/D 2ND STAGE ID FAN
PREALARM
ALERT

ITEM NUM	TAG NUMBER			DESCRIPTION		SET POINT	17	16	15	14	13	12	11	10	07	06	05	04	03	02	01	00	17	16	15	14	13	12	11	10	07	06	05	04	03	02	01	00	PREALARM	ALERT	REMARKS	ALARM BIT B001:XX/XX	MASK WORD B8:XX	
71	24	LAH	824	PAS SCRUBBER CLEAN LIQUOR SUMP		**79 in**																																		X	SP from P&ID (19 ft 8 in. minus 12 ft 0 in. offset) "Overflow" alarm added per ANAC1117SRL.	TBD	NA	CH 6
72	24	LAL	824	PAS SCRUBBER CLEAN LIQUOR SUMP		**41 in**																																		X	SP from P&ID (14 ft 0 in. minus 12 ft 0 in. offset). SP is 30 in. above bottom of chimney tray well point. Alarm response per Oct 2000 PAS/PFS mtg.	1650/12	100	CH 6
73	24	FAL	825	CLEAN LIQUOR	TO SCRUBBER	SP-10%																																		X	SP = flow setpoint entered in controller by operator. Normal flow to be 770 gpm.	1650/10	NA	
74	24	FALL	825	CLEAN LIQUOR	TO SCRUBBER	600 gpm			X	X				X																											RCRA AWFCO LIC 20. See NOTE 3. 5 sec delay. DSIC to add I-22 interlock to AN-6-D-511.	1650/06	146	
75	24	DAH	826	CLEAN LIQUOR	DENSITY	1.12 sg																																		X	SP per Oct 2000 AN PAS/PFS review mtg.	1651/04	NA	
76	24	DAHH	826	CLEAN LIQUOR	DENSITY	1.15 sg			X	X				X																											SP per Oct 2000 AN PAS/PFS review mtg.	1651/12	NA	
77	24	XA	826	CLEAN LIQUOR DENSITY MALF		MALF																																		**X**	Alarm per Oct 2000 AN PAS/PFS review mtg.	1621/00	NA	CH 6
78	24	FAL	827	PAS QUENCH	BRINE	60 gpm																																		X		1450/00	NA	
79	24	FAL	828	BRINE TO LIC	VENTURI SCRBR	130 gpm																																		X	5 sec delay. See NOTE 3. Ref: RFI C-ANCDF-003R1	TBD	NA	
80	24	FALL	828	BRINE TO LIC	VENTURI SCRBR	126 gpm			X	X				X																											RCRA AWFCO LIC 18; **10 sec** delay. See NOTE 3. Alarm added by ANAC1038SRL.	1850/02	66	CH 8
81	24	PDAH	829	PAS VENTURI	BRINE FILTER	10.0 psid																																		X		1850/14	NA	
82	24	AAH	831	PAS QUENCH	BRINE pH	9.5 pH																																		X		1850/12	NA	
83	24	AAL	831	PAS QUENCH	BRINE pH	6.5 pH																																		X	SP per Oct 2000 AN PAS/PFS mtg.	1850/10	NA	
84	24	AALL	831	PAS QUENCH	BRINE pH	5.5 pH			X	X				X																											SP per Oct 2000 AN PAS/PFS mtg. Alarm added by ANAP1110PAS.	1851/04	76	
85	24	AIT	831A/B	PAS QUENCH	BRINE pH	Calibrate			X	X				X																											Shutdown requires that AIT-831A and -831B are in calibrate mode. Alarm may be deleted (see FAWB Note B-16).	1864/13 1865/13	250	
86	24	AAH	832	PAS SCRUBBER	CLEAN LIQ pH	9.5 pH																																	**X**			1651/02	NA	CH 6
87	24	AAL	832	PAS SCRUBBER	CLEAN LIQ pH	7.5 pH																																		X	SP per Oct 2000 AN PAS/PFS review mtg.	1652/00	NA	
88	24	AALL	832	PAS SCRUBBER	CLEAN LIQ pH	**6.5 pH**			X	X				X																											RCRA AWFCO LIC 21. See NOTE 3. Alarm added to AN-6-D-511 by ECP ANWP1122SRL. See FAWB Note B-16.	1651/00	TBD	CH 8
89	24	DAH	835	PAS QUENCH	BRINE DENSITY	**1.12 sg**																																		X	Setpoint from RFI S-ALL-0232	1850/16	NA	CH 6
90	24	DAHH	835	PAS QUENCH	BRINE DENSITY	1.28 sg			X	X				X																											RCRA AWFCO LIC 19; See NOTE 3. (Note: RFI S-ALL-0232 SP is 1.25 sg)	1851/02	228	CH 8
91	24	XA	835	PAS QUENCH BRINE DENSITY MALF		MALF	X		X	X				X																											Alarm and response per Oct 2000 AN PAS/PFS review mtg.	1820/10	92	

ANCDF LIQUID INCINERATOR (LIC) POLLUTION ABATEMENT SYSTEM (PAS) AND PAS FILTER SYSTEM (PFS)

ANCDF LIC PAS/PFS — ALARM AND INTERLOCK MATRIX — **ANCDF LIC PAS/PFS**

P&IDs: AN-1-D-547/1, AN-6-D-502, -507, -511, -512, -517, -523, -525, and -529; PLC: ICS-CONR-114; INTERLOCK: I-22

B8:010/: F00 - SPARE; F01 - SPARE; F02 - SPARE; F03 - SPARE; F04 - S/D AGENT PUMPS; F05 - LOCKOUT SECONDARY BURNER (NOTE 1); F06 - LOCKOUT PRIMARY BURNER (NOTE 1); F07 - INHIBIT FUEL OIL PURGE OF AGENT LINE; F10 - S/D SEC COMB AIR BLOWER; F11 - S/D PRI COMB AIR BLOWER; F12 - SPARE; F13 - CLOSE DECON/PRW VALVE; F14 - STOP DECON FEED/SWITCH TO PRW; F15 - STOP AGENT FEED; F16 - S/D SEC BURNER; F17 - S/D PRI BURNER; MALFUNCTION

B8:011/: P17 - SHUTDOWN PFS-COOL-213A FAN B (NOTE 1); P16 - SHUTDOWN PFS-COOL-213A FAN A (NOTE 1); P15 - SHUTDOWN PFS-COOL-213B FAN B (NOTE 1); P14 - SHUTDOWN PFS-COOL-213B FAN A (NOTE 1); P13 - OPEN QUENCH EMERG. PRW (NOTE 1); P12 - S/D WATER RETURN PUMP; P11 - BKUP BRINE PUMP ON (NOTE 1); P10 - BKUP CLEAN LIQ PUMP ON (NOTE 1); P07 - SPARE; P06 - S/D BRINE PUMPS; P05 - S/D CLEAN LIQUOR PUMPS; P04 - S/D 1ST & 2ND STAGE ID FAN; P03 - SPARE; P02 - BYPASS CARBON FILTER (NOTE 1); P01 - S/D IST STAGE ID FAN; P00 - S/D 2ND STAGE ID FAN; PREALARM; ALERT

ITEM NUM	TAG NUMBER			DESCRIPTION		SET POINT	17	16	15	14	13	12	11	10	07	06	05	04	03	02	01	00	17	16	15	14	13	12	11	10	07	06	05	04	03	02	01	00			REMARKS	ALARM BIT B001:XX/XX	MASK WORD B8:XX	
92	24	PAL	838	BRINE PUMP	DISCHARGE	70 psig																							X													10 sec delay after pump startup. 3 sec delay before S/D of primary pump. Response per Oct 2000 AN PAS/PFS review mtg. SP may change due to updated pump head calculations in ECPs ANAC1038SRL & ANAP1110PAS.	1850/00	NA	
93	24	PALL	838	BRINE PUMP	DISCHARGE	40 psig			X	X				X																													1851/12	242	
94	24	PDAH	840	PAS SCRUBBER	CLEAN LIQ FIL	10.0 psid																																	X				1650/02	NA	
95	24	FISL	841	PAS-PUMP-211	SEAL WATER	0.15 gpm																							X													S/D PAS-PUMP-211 if selected as primary (3 sec delay) and switch to secondary pump. Alarm response per Oct 2000 AN PAS/PFS mtg.	1820/00	NA	
96	24	XA	844	PAS-PUMP-211	QUENCH BRINE	MALF	X																						X													Switchover to secondary pump on malfunction alarm when PAS-PUMP-211 is selected as primary.	1860/11	NA	
97	24	FISL	845	PAS-PUMP-212	SEAL WATER	0.15 gpm																							X													S/D PAS-PUMP-212 if selected as primary (3 sec delay) and switch to secondary pump. Alarm response per Oct 2000 AN PAS/PFS mtg.	1820/02	NA	
98	24	XA	848	PAS-PUMP-212	QUENCH BRINE	MALF	X																						X													Switchover to secondary pump on malfunction alarm when PAS-PUMP-212 is selected as primary.	1862/11	NA	
99	24	LAH	864	PAS MIST ELIM.	SUMP	18 in																																		X		SP per AN-6-D-512. Start PAS-PUMP-222 (see FAWB Note B-17).	0650/02	NA	CH 6
100	24	LAHH	864	PAS MIST ELIM.	SUMP	20 in																																				SP per AN-6-D-512.	0650/10	NA	
101	24	LAL	864	PAS MIST ELIM.	SUMP	10 in																																		X		SP per AN-6-D-512.	0650/00	NA	CH 6
102	24	LSLL	865	PAS MIST ELIM.	SUMP	8 in																						X														3 sec delay. SP per AN-6-D-512. Alarm active when 24-HS-864 selected to LIC mist eliminator. Hardwired S/D of pump needs to be disabled when 24-HS-864 is aligned to the spare (Note 24-HS-864 is not shown on P&ID).	0620/00	82	
103	24	LSHH	866	PAS MIST ELIM.	SUMP	66 in																																				3 sec delay. SP per AN-6-D-512. Input to PAS NORMAL relay.	0620/02	NA	
104	24	PDAH	867	PAS MIST ELIM.	DP AT CANDLES	15 in wc																																	X				0650/04	NA	
105	24	PDAHH	867	PAS MIST ELIM.	DP AT CANDLES	20 in wc			X	X				X																													0650/12	144	
106	24	FSL	901	PAS SCRUBBER	PURGE PERMISS	1200 scfm																																	X			Min flow for purge; 15 sec delay. SP from instrument data sheet.	1620/14	NA	
107	24	FSLL	901	PAS SCRUBBER	NFPA BURN S/D	650 scfm			X	X				X	X	X																										3 sec delay for stop feed. SP from instrument data sheet. BMS 3-P running interlock. BMS tag #24-FSLL-902 will be corrected by ANCDF SC.	1620/16	88	

ANCDF LIQUID INCINERATOR (LIC) POLLUTION ABATEMENT SYSTEM (PAS) AND PAS FILTER SYSTEM (PFS)

ANCDF LIC PAS/PFS — ALARM AND INTERLOCK MATRIX — **ANCDF LIC PAS/PFS**

P&IDs: AN-1-D-547/1, AN-6-D-502, -507, -511, -512, -517, -523, -525, and -529; PLC: ICS-CONR-114; INTERLOCK: I-22

B8:010/

17	16	15	14	13	12	11	10	07	06	05	04	03	02	01	00
F00 - SPARE	F01 - SPARE	F02 - SPARE	F03 - SPARE	F04 - S/D AGENT PUMPS	F05 - LOCKOUT SECONDARY BURNER (NOTE 1)	F06 - LOCKOUT PRIMARY BURNER (NOTE 1)	F07 - INHIBIT FUEL OIL PURGE OF AGENT LINE	F10 - S/D SEC COMB AIR BLOWER	F11 - S/D PRI COMB AIR BLOWER	F12 - SPARE	F13 - CLOSE DECON/PRW VALVE	F14 - STOP DECON FEED/SWITCH TO PRW	F15 - STOP AGENT FEED	F16 - S/D SEC BURNER	F17 - S/D PRI BURNER

B8:011/

17	16	15	14	13	12	11	10	07	06	05	04	03	02	01	00
P17 - SHUTDOWN PFS-COOL-213A FAN B (NOTE 1)	P16 - SHUTDOWN PFS-COOL-213A FAN A (NOTE 1)	P15 - SHUTDOWN PFS-COOL-213B FAN B (NOTE 1)	P14 - SHUTDOWN PFS-COOL-213B FAN A (NOTE 1)	P13 - OPEN QUENCH EMERG. PRW (NOTE 1)	P12 - S/D WATER RETURN PUMP	P11 - BKUP BRINE PUMP ON (NOTE 1)	P10 - BKUP CLEAN LIQ PUMP ON (NOTE 1)	P07 - SPARE	P06 - S/D BRINE PUMPS	P05 - S/D CLEAN LIQUOR PUMPS	P04 - S/D 1ST & 2ND STAGE ID FAN	P03 - SPARE	P02 - BYPASS CARBON FILTER (NOTE 1)	P01 - S/D IST STAGE ID FAN	P00 - S/D 2ND STAGE ID FAN

ITEM NUM	TAG NUMBER			DESCRIPTION		SET POINT	MALFUNCTION	PREALARM	ALERT	REMARKS	ALARM BIT B001:XX/XX	MASK WORD B8:XX	
108	24	TSH	976A-F	1st STAGE ID FAN	WINDING TEMP	320°F			X	3 sec delay. Alarm on high temp for any of 24-TSH-976A through F. SP from vendor info. Response per Oct 2000 AN PAS/PFS review mtg.	1220/10	TBD	CH 6
109	24	TSHH	976A-F	1st STAGE ID FAN	WINDING TEMP	329°F		X X X X		3 sec delay. Alarm on high-high temp for any of 24-TSHH-976A thru F. S/D 1st stage, except when running in emergency mode. SP from vendor info. Response per Oct 2000 AN PAS/PFS review mtg.	1221/16	110	CH 6
110	24	IAH	977	1st STAGE ID FAN	MOTOR CURRENT	269 amp			X	2-min delay on startup. SP per RFI S-ALL-232.	1250/04	112	CH 6
111	24	XAH	978	1st STAGE ID FAN	VIBRATION	0.25 in/sec			X	3 sec delay. See NOTE 7.	1251/00	TBD	CH 6
112	24	XSHH	978	1st STAGE ID FAN	VIBRATION	0.5 in/sec		X X X X		3 sec delay.S/D 1st stage, except when running in emergency mode. See NOTE 7.	1222/00	114	CH 6
113	24	XA	979	ID FAN	1ST STAGE MTR	MALF	X	X X X		Start I-lock for 1st stage motor.	1261/11	118	
114	114	TAH	130	PFS-COOL-213A CLEAN LIQ COOLER		135°F			X	SP per RFI S-ALL-232.	3050/12	NA	
115	114	TAL	130	PFS-COOL-213A CLEAN LIQ COOLER		100°F		X X		SP per RFI S-ALL-232. Instant alarm, 120-sec delay for cooler S/D (see FAWB Note B-20).	3050/10	NA	CH 9
116	114	XSH	137	PFS-COOL-213A FAN B VIBRATION		See NOTE 6			X	5 sec delay (vendor info shows additional hardwired startup time delay relay)	3020/02	NA	
117	114	XSHH	138	PFS-COOL-213A FAN B VIBRATION		See NOTE 6		X		5 sec delay (vendor info shows additional hardwired startup time delay relay)	3020/12	NA	
118	114	XSH	139	PFS-COOL-213A FAN A VIBRATION		See NOTE 6			X	5 sec delay (vendor info shows additional hardwired startup time delay relay)	3020/00	NA	
119	114	XSHH	140	PFS-COOL-213A FAN A VIBRATION		See NOTE 6		X		5 sec delay (vendor info shows additional hardwired startup time delay relay)	3020/10	NA	
120	114	SAH	141A	PFS-COOL-213A FAN B SPEED		1760 rpm			X	SP per RFI S-ALL-232 (66Hz = 1980 rpm).	3051/02	NA	CH 6
121	114	SAH	142A	PFS-COOL-213A FAN A SPEED		1760 rpm			X	SP per RFI S-ALL-232 (66Hz = 1980 rpm).	3051/00	NA	CH 6
122	114	XA	146	PFS-COOL-213A FAN B		TROUBLE		X		On time delay. Alarm generated by XSHH-138 or VFD in fault lockout. VFD internally configured to stop motor (see RFI C-PBCDF-002).	3021/02	NA	
123	114	XA	148	PFS-COOL-213A FAN A		TROUBLE		X		On time delay. Alarm generated by XSHH-140 or VFD in fault lockout. VFD internally configured to stop motor (see RFI C-PBCDF-002).	3021/00	NA	

ANCDF LIQUID INCINERATOR (LIC) POLLUTION ABATEMENT SYSTEM (PAS) AND PAS FILTER SYSTEM (PFS)

ANCDF LIC PAS/PFS — ALARM AND INTERLOCK MATRIX — **ANCDF LIC PAS/PFS**

P&IDs: AN-1-D-547/1, AN-6-D-502, -507, -511, -512, -517, -523, -525, and -529; PLC: ICS-CONR-114; INTERLOCK: I-22

B8:010/: F00 - SPARE; F01 - SPARE; F02 - SPARE; F03 - SPARE; F04 - S/D AGENT PUMPS; F05 - LOCKOUT SECONDARY BURNER (NOTE 1); F06 - LOCKOUT PRIMARY BURNER (NOTE 1); F07 - INHIBIT FUEL OIL PURGE OF AGENT LINE; F10 - S/D SEC COMB AIR BLOWER; F11 - S/D PRI COMB AIR BLOWER; F12 - SPARE; F13 - CLOSE DECON/PRW VALVE; F14 - STOP DECON FEED/SWITCH TO PRW; F15 - STOP AGENT FEED; F16 - S/D SEC BURNER; F17 - S/D PRI BURNER; MALFUNCTION

B8:011/: P17 - SHUTDOWN PFS-COOL-213A FAN B (NOTE 1); P16 - SHUTDOWN PFS-COOL-213A FAN A (NOTE 1); P15 - SHUTDOWN PFS-COOL-213B FAN B (NOTE 1); P14 - SHUTDOWN PFS-COOL-213B FAN A (NOTE 1); P13 - OPEN QUENCH EMERG. PRW (NOTE 1); P12 - S/D WATER RETURN PUMP; P11 - BKUP BRINE PUMP ON (NOTE 1); P10 - BKUP CLEAN LIQ PUMP ON (NOTE 1); P07 - SPARE; P06 - S/D BRINE PUMPS; P05 - S/D CLEAN LIQUOR PUMPS; P04 - S/D 1ST & 2ND STAGE ID FAN; P03 - SPARE; P02 - BYPASS CARBON FILTER (NOTE 1); P01 - S/D IST STAGE ID FAN; P00 - S/D 2ND STAGE ID FAN; PREALARM; ALERT

CH 6

ITEM NUM	TAG NUMBER			DESCRIPTION	SET POINT	17	16	15	14	13	12	11	10	07	06	05	04	03	02	01	00	17	16	15	14	13	12	11	10	07	06	05	04	03	02	01	00	PREALARM	ALERT	REMARKS	ALARM BIT B001:XX/XX	MASK WORD B8:XX
124	114	PAL	170	CLEAN LIQ PUMP DISCH PRESS	50 psig																									X											10 sec delay after pump startup. 3 sec delay before S/D of primary pump. Response per Oct 2000 PAS/PFS review mtg.	1650/00	230
125	114	PALL	170	CLEAN LIQ PUMP DISCH PRESS	25 psig			X	X					X								X	X	X	X							X								RCRA AWFCO LIC 23. See NOTE 3. 10 sec delay after pump startup. Response per Oct 2000 PAS/PFS review mtg.	1650/04	142
126	114	XA	173	CLEAN LIQ PUMP A (PFS-PUMP-234)	MALF	X																								X											Switchover to backup pump on malf alarm when PFS-PUMP-234 is selected as primary.	1660/11	NA
127	114	FISL	176	CLEAN LIQ PUMP A SEAL WATER	0.15 gpm																									X											S/D PFS-PUMP-234 if selected as primary (3 sec delay) and switch to secondary pump. Alarm response per Oct 2000 AN PAS/PFS mtg.	1620/04	NA
128	114	XA	179	CLEAN LIQ PUMP B (PFS-PUMP-235)	MALF	X																								X											Switchover to backup pump on malf alarm when PFS-PUMP-235 is selected as primary.	1662/11	NA
129	114	FISL	182	CLEAN LIQ PUMP B SEAL WATER	0.15 gpm																									X											S/D PFS-PUMP-235 if selected as primary (3 sec delay) and switch to secondary pump. Alarm response per Oct 2000 AN PAS/PFS mtg.	1620/06	NA
130	114	TAH	418	PFS-BURN-201 EXHAUST TEMP	172°F																																	X		SP per RFI S-ALL-241 R1.	3251/14	NA
131	114	TAL	418	PFS-BURN-201 EXHAUST TEMP	135°F																																	X		SP per RFI S-ALL-241 R1.	3251/16	NA
132	114	TSHH	433	PFS-BURN-201 EXHAUST TEMP	180°F			X	X					X																					X					Alarm response per Oct 2000 AN PAS/PFS mtg.	3220/10	TBD
133	114	XA	434	PFS-BURN-201 EXH MOIST ANALYZER	> 10% DIFF																																	X		Alarm when MIT-434A & B deviation exceeds 10% of upper range value based on ROHA.	3252/00	NA
134	114	MAH	434A	PFS-BURN-201 EXH REL HUMIDITY	60%RH																																	X		Instantaneous alarm. Ref: ANAP1110PAS.	3251/10	NA
135	114	MAHH	434A	PFS-BURN-201 EXH REL HUMIDITY	80%RH																																			Instantaneous alarm. Ref: ANAP1110PAS. See NOTE 8.	3220/00	NA
136	114	XS	434A	PFS-BURN-201 EXH MOIST ANALYZER	MALF	X																																		On time delay. Remove instrument from ROHA calculation if it is the active unit.	3220/04	NA
137	114	MAH	434B	PFS-BURN-201 EXH REL HUMIDITY	60%RH																																	X		Instantaneous alarm. Ref: ANAP1110PAS.	3251/12	NA
138	114	MAHH	434B	PFS-BURN-201 EXH REL HUMIDITY	80%RH																																			Instantaneous alarm. Ref: ANAP1110PAS. See NOTE 8.	3220/02	NA
139	114	XS	434B	PFS-BURN-201 EXH MOIST ANALYZER	MALF	X																																		On time delay. Remove instrument from ROHA calculation if it is the active unit.	3220/06	NA
140	114	MAH	434C	PFS-BURN-201 EXH REL HUMIDITY	52%RH																																	X		ROHA. Ref: ANAP1110PAS.	TBD	NA
141	114	MAHH	434C	PFS-BURN-201 EXH REL HUMIDITY	55%RH																																			ROHA. Ref: ANAP1110PAS. See NOTE 8.	TBD	NA
142	114	PDAH	436A	PFS-FILT-209 PREFILTER BANK	2.0 in wc																																	X		SP per RFI S-ALL-232.	3250/00	NA
143	114	PDAH	436B	PFS-FILT-209 1st HEPA FILTER BANK	4.0 in wc																																	X		SP per RFI S-ALL-232.	3250/02	NA

ANCDF LIQUID INCINERATOR (LIC) POLLUTION ABATEMENT SYSTEM (PAS) AND PAS FILTER SYSTEM (PFS)

ANCDF LIC PAS/PFS — ALARM AND INTERLOCK MATRIX — **ANCDF LIC PAS/PFS**

P&IDs: AN-1-D-547/1, AN-6-D-502, -507, -511, -512, -517, -523, -525, and -529; PLC: ICS-CONR-114; INTERLOCK: I-22

B8:010/

17	16	15	14	13	12	11	10	07	06	05	04	03	02	01	00
F00 - SPARE	F01 - SPARE	F02 - SPARE	F03 - SPARE	F04 - S/D AGENT PUMPS	F05 - LOCKOUT SECONDARY BURNER (NOTE 1)	F06 - LOCKOUT PRIMARY BURNER (NOTE 1)	F07 - INHIBIT FUEL OIL PURGE OF AGENT LINE	F10 - S/D SEC COMB AIR BLOWER	F11 - S/D PRI COMB AIR BLOWER	F12 - SPARE	F13 - CLOSE DECON/PRW VALVE	F14 - STOP DECON FEED/SWITCH TO PRW	F15 - STOP AGENT FEED	F16 - S/D SEC BURNER	F17 - S/D PRI BURNER

B8:011/

17	16	15	14	13	12	11	10	07	06	05	04	03	02	01	00
P17 - SHUTDOWN PFS-COOL-213A FAN B (NOTE 1)	P16 - SHUTDOWN PFS-COOL-213A FAN A (NOTE 1)	P15 - SHUTDOWN PFS-COOL-213B FAN B (NOTE 1)	P14 - SHUTDOWN PFS-COOL-213B FAN A (NOTE 1)	P13 - OPEN QUENCH EMERG. PRW (NOTE 1)	P12 - S/D WATER RETURN PUMP	P11 - BKUP BRINE PUMP ON (NOTE 1)	P10 - BKUP CLEAN LIQ PUMP ON (NOTE 1)	P07 - SPARE	P06 - S/D BRINE PUMPS	P05 - S/D CLEAN LIQUOR PUMPS	P04 - S/D 1ST & 2ND STAGE ID FAN	P03 - SPARE	P02 - BYPASS CARBON FILTER (NOTE 1)	P01 - S/D IST STAGE ID FAN	P00 - S/D 2ND STAGE ID FAN

ITEM NUM	TAG NUMBER			DESCRIPTION	SET POINT	MALFUNCTION	PREALARM	ALERT	REMARKS	ALARM BIT B001:XX/XX	MASK WORD B8:XX	
144	114	PDAH	436C	PFS-FILT-209 1st CARBON FILT BANK	3.5 in wc			X	SP per RFI S-ALL-232.	3250/04	NA	
145	114	PDAH	436D	PFS-FILT-209 2nd CARBON FILT BANK	3.5 in wc			X	SP per RFI S-ALL-232.	3250/06	NA	
146	114	PDAH	436E	PFS-FILT-209 2nd HEPA FILTER BANK	4.0 in wc			X	SP per RFI S-ALL-232.	3250/10	NA	
147	114	PDAH	436F	PFS-FILT-209 OVERALL DP	16 in wc			X	SP per RFI S-ALL-232.	3250/12	NA	
148	114	ZS	450B	PFS-FILT-209 BYPASS DAMPER	NOT CLOSED				Based on Oct 2000 PAS/PFS mtg., this is not an agent feed permissive as stated on AN-6-D-525 Note 4.	3261/14	NA	
149	114	PDAH	617	PFS-COOL-213B CLEAN LIQ COOLER	**45 psid**			X	SP per RFI S-ALL-232.	3050/06	NA	CH 7
150	114	PDAL	617	PFS-COOL-213B CLEAN LIQ COOLER	**20 psid**			X	SP per RFI S-ALL-232.	3050/04	NA	CH 7
151	114	TAH	632	PFS-COOL-213B CLEAN LIQ COOLER	135°F			X	SP per RFI S-ALL-232.	3050/16	NA	
152	114	TAL	632	PFS-COOL-213B CLEAN LIQ COOLER	**100°F**				SP per RFI S-ALL-232. Instant alarm, 120-sec delay for cooler S/D (see FAWB Note B-20).	3050/14	NA	CH 9
153	114	PDAH	633	PFS-COOL-213A CLEAN LIQ COOLER	**45 psid**			X	SP per RFI S-ALL-232.	3050/02	NA	CH 7
154	114	PDAL	633	PFS-COOL-213A CLEAN LIQ COOLER	**20 psid**			X	SP per RFI S-ALL-232.	3050/00	NA	CH 7
155	114	XSH	639	PFS-COOL-213B FAN B VIBRATION	See NOTE 6			X	5 sec delay (vendor info shows additional hardwired startup time delay relay)	3020/06	NA	
156	114	XSHH	640	PFS-COOL-213B FAN B VIBRATION	See NOTE 6				5 sec delay (vendor info shows additional hardwired startup time delay relay)	3020/16	NA	
157	114	XSH	641	PFS-COOL-213B FAN A VIBRATION	See NOTE 6			X	5 sec delay (vendor info shows additional hardwired startup time delay relay)	3020/04	NA	
158	114	XSHH	642	PFS-COOL-213B FAN A VIBRATION	See NOTE 6				5 sec delay (vendor info shows additional hardwired startup time delay relay)	3020/14	NA	
159	114	SAH	643A	PFS-COOL-213B FAN B SPEED	**1760 rpm**			**X**	SP per RFI S-ALL-232 (66Hz = 1980 rpm).	3051/06	NA	CH 6
160	114	SAH	644A	PFS-COOL-213B FAN A SPEED	**1760 rpm**			**X**	SP per RFI S-ALL-232 (66Hz = 1980 rpm).	3051/04	NA	CH 6
161	114	XA	648	PFS-COOL-213B FAN B	TROUBLE				On time delay. Alarm generated by XSHH-640 or VFD in fault lockout. VFD internally configured to stop motor (see RFI C-PBCDF-002).	3021/06	NA	
162	114	XA	650	PFS-COOL-213B FAN A	TROUBLE				On time delay. Alarm generated by XSHH-642 or VFD in fault lockout. VFD internally configured to stop motor (see RFI C-PBCDF-002).	3021/04	NA	
163	114	XA	783	PFS-BURN-201 BURNER TROUBLE S/D	LOCKOUT				Per Oct 2000 PAS/PFS review mtg., stop feed only if carbon filter unit is online.	3221/00	TBD	
164	114	TISH	875	PFS-BURN-201 EXHAUST TEMP	168°F			X	On time delay. SP per DSIC.	3220/12	NA	
165	114	TSHH	875	PFS-BURN-201 EXHAUST TEMP **LOCKOUT**	176°F	**X**			On time delay. S/D PFS-BURN-201. SP per DSIC.	3220/14	NA	CH 6/7

ANCDF LIQUID INCINERATOR (LIC) POLLUTION ABATEMENT SYSTEM (PAS) AND PAS FILTER SYSTEM (PFS)

ANCDF LIC PAS/PFS — ALARM AND INTERLOCK MATRIX — **ANCDF LIC PAS/PFS**

P&IDs: AN-1-D-547/1, AN-6-D-502, -507, -511, -512, -517, -523, -525, and -529; PLC: ICS-CONR-114; INTERLOCK: I-22

F00 - SPARE
F01 - SPARE
F02 - SPARE
F03 - SPARE
F04 - S/D AGENT PUMPS
F05 - LOCKOUT SECONDARY BURNER (NOTE 1)
F06 - LOCKOUT PRIMARY BURNER (NOTE 1)
F07 - INHIBIT FUEL OIL PURGE OF AGENT LINE
F10 - S/D SEC COMB AIR BLOWER
F11 - S/D PRI COMB AIR BLOWER
F12 - SPARE
F13 - CLOSE DECON/PRW VALVE
F14 - STOP DECON FEED/SWITCH TO PRW
F15 - STOP AGENT FEED
F16 - S/D SEC BURNER
F17 - S/D PRI BURNER
MALFUNCTION

P17 - SHUTDOWN PFS-COOL-213A FAN B (NOTE 1)
P16 - SHUTDOWN PFS-COOL-213A FAN A (NOTE 1)
P15 - SHUTDOWN PFS-COOL-213B FAN B (NOTE 1)
P14 - SHUTDOWN PFS-COOL-213B FAN A (NOTE 1)
P13 - OPEN QUENCH EMERG. PRW (NOTE 1)
P12 - S/D WATER RETURN PUMP
P11 - BKUP BRINE PUMP ON (NOTE 1)
P10 - BKUP CLEAN LIQ PUMP ON (NOTE 1)
P07 - SPARE
P06 - S/D BRINE PUMPS
P05 - S/D CLEAN LIQUOR PUMPS
P04 - S/D 1ST & 2ND STAGE ID FAN
P03 - SPARE
P02 - BYPASS CARBON FILTER (NOTE 1)
P01 - S/D IST STAGE ID FAN
P00 - S/D 2ND STAGE ID FAN
PREALARM
ALERT

CH 6

ITEM NUM	TAG NUMBER	DESCRIPTION	SET POINT	B8:010/ 17	16	15	14	13	12	11	10	07	06	05	04	03	02	01	00	B8:011/ 17	16	15	14	13	12	11	10	07	06	05	04	03	02	01	00	REMARKS	ALARM BIT B001:XX/XX	MASK WORD B8:XX
166	MON ACAM 129	ACAMS COMMON STACK	NOTE 5				X	X				X																								RCRA AWFCO for DFS, LIC, and MPF. DICO from ICS-CONR-112.	B4:31/00	140
167	MON ACAM 129	ACAMS COMMON STACK	MALF	X			X	X				X																								RCRA AWFCO for DFS, LIC, and MPF. DICO from ICS-CONR-112.	B4:31/00	140
168	MON ACAM 129	ACAMS COMMON STACK	OFFLINE				X	X				X																								RCRA AWFCO for DFS, LIC, and MPF. DICO from ICS-CONR-112.	B4:31/00	140
169	MON ACAM 129	ACAMS COMMON STACK	NOT STAGGERED				X	X				X																								RCRA AWFCO for DFS, LIC, and MPF. DICO from ICS-CONR-112.	B4:31/00	140
170	MON ACAM 134	ACAMS LIC PAS	NOTE 5				X	X				X																								RCRA AWFCO.	2420/06	90
171	MON ACAM 134	ACAMS LIC PAS	MALF	X			X	X				X																								RCRA AWFCO.	2420/06	90
172	MON ACAM 134	ACAMS LIC PAS	OFFLINE				X	X				X																								RCRA AWFCO.	2420/06	90
173		BRA TANKS LVL HI-HI / UNAVAILABLE	DICO				X	X				X																								RCRA AWFCO LIC 24. See BRA FAWB for tag #s and setpoints.	B4:23/01	210

NOTE 1: F05, F06, P02, P10, P11, P13, P14, P15, P16, and P17 responses are not part of the deathwish relay. These responses are included as column headings for presentation clarity.
NOTE 2: The ANCDF LIC CEMS alarm configuration is based on discussions held at ANCDF in Sept 2000. ANCDF will have redundant RCRA CEMS at the secondary chamber exhaust, single process CEMS units at the ID fans, and no CEMS units at the primary chamber exhaust. The ID fan CEMS will not have CON alarms associated with them. The referenced code and RFI S-ALL-249 donot reflect this configuration. ANCDF will revise the code to match.
NOTE 3: AWFCO alarm setpoints reflect the proposed normal operational setpoints submitted to ADEM for STB as agreed to at the Sept 2000 ANCDF LIC review meeting.
NOTE 4: 24-LSHHH-819 additional interlocks: 1) close 24-XV-807, 2) close 24-XV-798 and inhibit timer activation, 3) close 24-XY-834B/D. Also when controllers are in AUTO, 1) close 24-LV-824, 2) close 24-LV-818, 3) close 24-AV-832, 4) close 24-AV-831.
NOTE 5: Per Sept 2000 ANCDF discussions, ACAMS RCRA AWFCO setpoints will be 0.2 ASC (ROHA) and 1.0 ASC (instantaneous). A prealarm at 0.2 ASC (instantaneous) will also be provided. Allowable stack concentration (ASC) for chemical agent are (mg/m3): GB= 0.0003, H/HD/HT= 0.03, and VX=0.0003.
NOTE 6: After the Oct 2000 AN PAS/PFS review meeting, the DSIC investigated the clean liquor air cooler vibration alarm setpoints. They found that the Murphy vibration switches are set by turning an uncalibrated screw. Specific vibration units could not be determined. The high vibration switch is set by turning the screw 1/4 turn past its start-up trip point and the high-high switch is set by turning the screw 1/2 turn past its start-up trip point.
NOTE 7: PAS exhaust blower vibration alarms reflect the current design. Per RFI C-ANCDF-005, the blower foundation design requires that the foundation vibration be < 1 mil double amplitude. This requirment was the basis for recommended setpoints in RFI S-ALL-0232. The vibration alarm setpoints may be changed, or new alarms added, to meet the foundation vibration design limits.
NOTE 8: At the Oct 2000 ANCDF PAS/PFS review meetings, the ANCDF SC stated that there would be no stop feed interlocks associated with the moisture analyzer alarms. ECP ANAP1110PAS, however, modified AN-6-D-525 Note 13 to state that the MSHH/MAHH alarms would generate a stop feed. The ANCDF A&I matrices reflect the SC's current position, but can be updated if ANCDF implements the design configuration.

ANCDF METAL PARTS FURNACE (MPF) POLLUTION ABATEMENT SYSTEM (PAS) AND PAS FILTER SYSTEM (PFS)

ANCDF MPF PAS/PFS — ALARM AND INTERLOCK MATRIX — **ANCDF MPF PAS/PFS**

ANCDF: P&IDs: AN-1-D-528, AN-6-D-504, -505, -523, -526, -527 and -528; PLC: ICS-CONR-113; INTERLOCK: I-8

F00 - SPARE
F01 - SPARE
F02 - S/D COOLING CONVEYOR
F03 - S/D UNLOAD CONVEYOR
F04 - STOP ZONE 1 TIMER
F05 - STOP ZONE 2 TIMER
F06 - STOP ZONE 3 TIMER
F07 - S/D DISCHARGE AIRLOCK CONVEYOR
F10 - S/D ZONE 3 CONVEYOR
F11 - S/D ZONE 2 CONVEYOR
F12 - S/D ZONE 1 CONVEYOR
F13 - S/D CHARGE AIRLOCK CONVEYOR
F14 - S/D COMBUSTION AIR BLOWER
F15 - S/D RESPECTIVE MPF AFTERBURNER
F16 - S/D RESPECTIVE MPF BURNER
F17 - STOP FEED
MALFUNCTION

P17 - S/D PFS-COOL-114A FAN B (NOTE 1)
P16 - S/D PFS-COOL-114A FAN A (NOTE 1)
P15 - S/D PFS-COOL-114B FAN B (NOTE 1)
P14 - S/D PFS-COOL-114B FAN A (NOTE 1)
P13 - OPEN QUENCH EMERG. PRW (NOTE 1)
P12 - S/D WATER RETURN PUMP
P11 - BKUP BRINE PUMP ON (NOTE 1)
P10 - BKUP CLEAN LIQ PUMP ON (NOTE 1)
P07 - SPARE
P06 - S/D BRINE PUMPS
P05 - S/D CLEAN LIQUOR PUMPS
P04 - S/D 1ST & 2ND STAGE ID FAN
P03 - SPARE
P02 - BYPASS CARBON FILTER (NOTE 1)
P01 - S/D IST STAGE ID FAN
P00 - S/D 2ND STAGE ID FAN
PREALARM
ALERT

CH 6

ITEM NUM	TAG NUMBER	DESCRIPTION	SET POINT		B8:010/ 17	16	15	14	13	12	11	10	07	06	05	04	03	02	01	00	B8:011/ 17	16	15	14	13	12	11	10	07	06	05	04	03	02	01	00		REMARKS	ALARM BIT B001:XX/XX	MASK WORD B8:XX
1	14 AAH 081A	AFB EXH O2 ANALYZER (NORMAL)	12% O2																																		X		Corrected to dry basis. See NOTE 2.	TBD	NA
2	14 AAH 081A	AFB EXH O2 ANALYZER (EMERGENCY)	9% O2																																		X		Corrected to dry basis. See NOTE 2. Alarm active only when dilution air is controlled by 13-AC-081 (Ref: RFI C-ANCDF-006).	TBD	NA
3	14 AAHH 081A	AFB EXHAUST O2 ANALYZER	15% O2		X																																		RCRA AWFCO MPF 13. Corrected to dry basis. See NOTEs 2 & 3.	1222/06	520
4	14 AAL 081A	AFB EXH O2 ANALYZER (NORMAL)	6% O2																																		X		Corrected to dry basis. See NOTE 2.	TBD	NA
5	14 AAL 081A	AFB EXH O2 ANALYZER (EMERGENCY)	5% O2																																		X		Corrected to dry basis. See NOTE 2. Alarm active only when dilution air is controlled by 13-AC-081 (Ref: RFI C-ANCDF-006).	TBD	NA
6	14 AALL 081A	AFB EXHAUST O2 ANALYZER	3% O2		X																																		RCRA AWFCO MPF 14. Corrected to dry basis. See NOTEs 2 & 3.	1020/00	378
7	14 XS 081A	AFB EXHAUST O2 ANALYZER	MALF	X	X																																		Stop feed on malfuntion alarm only if 14-AIT-081B is also in malfunction or is in "calibrate" mode. See NOTE 2.	1021/00 1222/14	TBD
8	14 HS 081A/B	BOTH MPF PAS O2 ANALYZERS IN CAL	In Calib		X																																		See NOTE 2.	1223/00	516
9	14 AAH 081B	AFB EXH O2 ANALYZER (NORMAL)	12% O2																																		X		Corrected to dry basis. See NOTE 2.	TBD	NA
10	14 AAH 081B	AFB EXH O2 ANALYZER (EMERGENCY)	9% O2																																		X		Corrected to dry basis. See NOTE 2. Alarm active only when dilution air is controlled by 13-AC-081 (Ref: RFI C-ANCDF-006).	TBD	NA
11	14 AAHH 081B	AFB EXHAUST O2 ANALYZER	15% O2		X																																		RCRA AWFCO MPF 13. Corrected to dry basis. See NOTEs 2 & 3.	TBD	TBD
12	14 AAL 081B	AFB EXH O2 ANALYZER (NORMAL)	6% O2																																		X		Corrected to dry basis. See NOTE 2.	TBD	NA
13	14 AAL 081B	AFB EXH O2 ANALYZER (EMERGENCY)	5% O2																																		X		Corrected to dry basis. See NOTE 2. Alarm active only when dilution air is controlled by 13-AC-081 (Ref: RFI C-ANCDF-006).	TBD	NA
14	14 AALL 081B	AFB EXHAUST O2 ANALYZER	3% O2		X																																		RCRA AWFCO MPF 14. Corrected to dry basis. See NOTEs 2 & 3.	TBD	TBD
15	14 XS 081B	AFB EXHAUST O2 ANALYZER	MALF	X	X																																		Stop feed on malfuntion alarm only if 14-AIT-081A is also in malfunction or is in "calibrate" mode. See NOTE 2.	TBD	TBD
16	14 AAH 384A	AFB EXHAUST CO ANALYZER	160 ppm																																		X		Instantaneous alarm. Corrected to 7% O2 dry basis. See NOTE 2.	TBD	NA

ANCDF METAL PARTS FURNACE (MPF) POLLUTION ABATEMENT SYSTEM (PAS) AND PAS FILTER SYSTEM (PFS)

ANCDF MPF PAS/PFS — ALARM AND INTERLOCK MATRIX — **ANCDF MPF PAS/PFS**

ANCDF: P&IDs: AN-1-D-528, AN-6-D-504, -505, -523, -526, -527 and -528; PLC: ICS-CONR-113; INTERLOCK: I-8

F00 - SPARE
F01 - SPARE
F02 - S/D COOLING CONVEYOR
F03 - S/D UNLOAD CONVEYOR
F04 - STOP ZONE 1 TIMER
F05 - STOP ZONE 2 TIMER
F06 - STOP ZONE 3 TIMER
F07 - S/D DISCHARGE AIRLOCK CONVEYOR
F10 - S/D ZONE 3 CONVEYOR
F11 - S/D ZONE 2 CONVEYOR
F12 - S/D ZONE 1 CONVEYOR
F13 - S/D CHARGE AIRLOCK CONVEYOR
F14 - S/D COMBUSTION AIR BLOWER
F15 - S/D RESPECTIVE MPF AFTERBURNER
F16 - S/D RESPECTIVE MPF BURNER
F17 - STOP FEED
MALFUNCTION

P17 - S/D PFS-COOL-114A FAN B (NOTE 1)
P16 - S/D PFS-COOL-114A FAN A (NOTE 1)
P15 - S/D PFS-COOL-114B FAN B (NOTE 1)
P14 - S/D PFS-COOL-114B FAN A (NOTE 1)
P13 - OPEN QUENCH EMERG. PRW (NOTE 1)
P12 - S/D WATER RETURN PUMP
P11 - BKUP BRINE PUMP ON (NOTE 1)
P10 - BKUP CLEAN LIQ PUMP ON (NOTE 1)
P07 - SPARE
P06 - S/D BRINE PUMPS
P05 - S/D CLEAN LIQUOR PUMPS
P04 - S/D 1ST & 2ND STAGE ID FAN
P03 - SPARE
P02 - BYPASS CARBON FILTER (NOTE 1)
P01 - S/D IST STAGE ID FAN
P00 - S/D 2ND STAGE ID FAN
PREALARM
ALERT

ITEM NUM	TAG NUMBER			DESCRIPTION	SET POINT	MALFUNCTION	B8:010/17	B8:010/16	B8:010/15	B8:010/14	B8:010/13	B8:010/12	B8:010/11	B8:010/10	B8:010/07	B8:010/06	B8:010/05	B8:010/04	B8:010/03	B8:010/02	B8:010/01	B8:010/00	B8:011/17	B8:011/16	B8:011/15	B8:011/14	B8:011/13	B8:011/12	B8:011/11	B8:011/10	B8:011/07	B8:011/06	B8:011/05	B8:011/04	B8:011/03	B8:011/02	B8:011/01	B8:011/00	ALERT	REMARKS	ALARM BIT B001:XX/XX	MASK WORD B8:XX	
17	14	AAHH	384A	AFB EXHAUST CO ANALYZER	200 ppm			X																															Instantaneous alarm. Corrected to 7% O2 dry basis. See NOTE 2.	**1051/10**	TBD	CH 6
18	14	MSH	384A	AB EXH CO ANALYZER MOISTURE	39%																																	X	Setpoint is design value. Vendor-supplied switch has span of only 0-25%. See NOTE 2.	TBD	NA	
19	14	XS	384A	AFB EXHAUST CO ANALYZER	MALF	X	X																																Stop feed on malf. alarm only if 14-AIT-384B is also in malf. or is in "calibrate" mode. Alarm active only when combined fuel flow to MPF and afterburner > 100 scfm. See NOTE 2.	1021/02 1222/16	TBD	
20	14	HS	384A/B	BOTH MPF PAS CO ANALYZERS IN CAL	In Calib		X																																See NOTE 2.	**1005/05**	518	CH 6
21	14	AAH	384B	AFB EXHAUST CO ANALYZER	160 ppm																																	X	Instantaneous alarm. Corrected to 7% O2 dry basis. See NOTE 2.	TBD	NA	
22	14	AAHH	384B	AFB EXHAUST CO ANALYZER	200 ppm		X																																Instantaneous alarm. Corrected to 7% O2 dry basis. See NOTE 2.	TBD	TBD	
23	14	MSH	384B	AB EXH CO ANALYZER MOISTURE	39%																																	X	Setpoint is design value. Vendor-supplied switch has span of only 0-25%. See NOTE 2.	TBD	NA	
24	14	XS	384B	AFB EXHAUST CO ANALYZER	MALF	X	X																																Stop feed on malf. alarm only if 14-AIT-384B is also in malf. or is in "calibrate" mode. Alarm active only when combined fuel flow to MPF and afterburner > 100 scfm. See NOTE 2.	TBD	TBD	
25	14	AAH	384C	AFB EXHAUST CO ANALYZER	90 ppm																																	X	1 hr rolling average. Corrected to 7% O2 dry basis. See NOTE 2.	TBD	NA	
26	14	AAHH	384C	AFB EXHAUST CO ANALYZER	100 ppm		X																																RCRA AWFCO MPF 12. Corrected to 7% O2 dry basis. 1 hr rolling avg. See NOTEs 2 & 3.	TBD	TBD	
27	24	PDAH	053	MPF/DFS SPARE MIST ELIM DP AT CANDLES	15 in wc																																	X		5250/06	NA	
28	24	PDAHH	053	MPF/DFS SPARE MIST ELIM DP AT CANDLES	20 in wc		X																																	TBD	TBD	
29	24	LSHH	059	MPF/DFS SPARE MIST ELIM SUMP	66 in																																		3 sec delay. SP per AN-6-D-527.	5220/02	NA	
30	24	LSLL	061	MPF/DFS SPARE MIST ELIM SUMP	8 in																						X												3 sec delay. SP per AN-6-D-527. Alarm active when 24-HS-293 selected to MPF spare mist eliminator. Hardwired S/D of pump needs to be disabled when 24-HS-293 is aligned to the MPF. (Note 24-HS-293 is not shown on P&ID).	5220/00	438	
31	24	LAH	067	MPF/DFS SPARE MIST ELIM SUMP	16 in																																X		SP from AN-6-D-527. Start water return pump (see FAWB Note B-17).	5250/02	NA	CH 6

ANCDF METAL PARTS FURNACE (MPF) POLLUTION ABATEMENT SYSTEM (PAS) AND PAS FILTER SYSTEM (PFS)

ANCDF MPF PAS/PFS — ALARM AND INTERLOCK MATRIX — **ANCDF MPF PAS/PFS**

ANCDF: P&IDs: AN-1-D-528, AN-6-D-504, -505, -523, -526, -527 and -528; PLC: ICS-CONR-113; INTERLOCK: I-8

B8:010/

F00 - SPARE
F01 - SPARE
F02 - S/D COOLING CONVEYOR
F03 - S/D UNLOAD CONVEYOR
F04 - STOP ZONE 1 TIMER
F05 - STOP ZONE 2 TIMER
F06 - STOP ZONE 3 TIMER
F07 - S/D DISCHARGE AIRLOCK CONVEYOR
F10 - S/D ZONE 3 CONVEYOR
F11 - S/D ZONE 2 CONVEYOR
F12 - S/D ZONE 1 CONVEYOR
F13 - S/D CHARGE AIRLOCK CONVEYOR
F14 - S/D COMBUSTION AIR BLOWER
F15 - S/D RESPECTIVE MPF AFTERBURNER
F16 - S/D RESPECTIVE MPF BURNER
F17 - STOP FEED
MALFUNCTION

B8:011/

P17 - S/D PFS-COOL-114A FAN B (NOTE 1)
P16 - S/D PFS-COOL-114A FAN A (NOTE 1)
P15 - S/D PFS-COOL-114B FAN B (NOTE 1)
P14 - S/D PFS-COOL-114B FAN A (NOTE 1)
P13 - OPEN QUENCH EMERG. PRW (NOTE 1)
P12 - S/D WATER RETURN PUMP
P11 - BKUP BRINE PUMP ON (NOTE 1)
P10 - BKUP CLEAN LIQ PUMP ON (NOTE 1)
P07 - SPARE
P06 - S/D BRINE PUMPS
P05 - S/D CLEAN LIQUOR PUMPS
P04 - S/D 1ST & 2ND STAGE ID FAN
P03 - SPARE
P02 - BYPASS CARBON FILTER (NOTE 1)
P01 - S/D IST STAGE ID FAN
P00 - S/D 2ND STAGE ID FAN
PREALARM
ALERT

ITEM NUM	TAG NUMBER	DESCRIPTION	SET POINT	17	16	15	14	13	12	11	10	07	06	05	04	03	02	01	00	17	16	15	14	13	12	11	10	07	06	05	04	03	02	01	00	PREALARM	ALERT	REMARKS	ALARM BIT B001:XX/XX	MASK WORD B8:XX	CH 6
32	24 LAHH 067	MPF/DFS SPARE MIST ELIM SUMP	18 in																																			SP per AN-6-D-527.	5250/04	NA	
33	24 LAL 067	MPF/DFS SPARE MIST ELIM SUMP	10 in																																		X	SP per AN-6-D-527.	5250/00	NA	CH 6
34	24 TAH 188	MPF/DFS SPARE MIST ELIM SUMP	128°F																																	X		SP per RFI S-ALL-232.	1652/14	NA	
35	24 TAHH 188	CLEAN LIQUOR TO SCRUBBER	143°F		X																																	Refs: RFI S-ALL-232 & ANAP1110PAS.	1652/16	NA	
36	24 TAL 188	CLEAN LIQUOR TO SCRUBBER	100°F																																		X	SP per RFI S-ALL-232.	1652/12	NA	CH 6
37	24 FAH 190	PAS-SCRB-101 CAUSTIC ADDITION	SP + 20%																																		X	Alarm active in flow control mode only. SP = controller setpoint. SP and response per Oct 2000 PAS/PFS review mtg	1652/10	NA	CH 6
38	24 FAL 190	PAS-SCRB-101 CAUSTIC ADDITION	SP - 20%																																	X		Alarm active in flow control mode only. SP = controller setpoint. SP and response per Oct 2000 PAS/PFS review mtg	1652/06	NA	
39	24 DAH 216	PAS-SCRB-101 BRINE DENSITY	1.20 sg																																	X		Setpoint from RFI S-ALL-0232	1850/16	508	
40	24 DAHH 216	PAS-SCRB-101 BRINE DENSITY	1.28 sg		X																																	RCRA AWFCO MPF 18. See NOTE 3. SP = 80 lb/ft3. (Note: RFI S-ALL-0232 SP is 1.25 sg)	1851/02	326	
41	24 XA 216	PAS-SCRB-101 BRINE DENSITY MALF	MALF	X	X																																	Alarm and response per Oct 2000 AN PAS/PFS review mtg.	1822/00	TBD	
42	24 FAL 217	PAS-TOWR-102 BRINE	60 gpm																																	X			1450/00	NA	
43	24 FAL 218	BRINE TO MPF VENTURI SCRBR	140 gpm																																	X		5 sec delay. Prealarm and SP per ANAP1110PAS and RFI C-ANCDF-003R1.	TBD	NA	
44	24 FALL 218	BRINE TO MPF VENTURI SCRBR	**126 gpm**		X																																	RCRA AWFCO MPF 17; 30 sec delay. SP per ANAP1110PAS and RFI C-ANCDF-003R1.	1850/02	302	CH 6
45	24 PDAH 222	PAS-SEPA-101 VENTURI SCRUB	SP+10 in wc																																	X		SP=setpoint entered in controller by operator	1850/06	NA	
46	24 PDAL 222	PAS-SEPA-101 VENTURI SCRUB	25 in wc																																	X			1850/04	NA	
47	24 PDALL 222	PAS-SEPA-101 VENTURI SCRUB	**18 in wc**		X																																	RCRA AWFCO MPF 16. See NOTE 3.	1851/00	318	CH 6
48	24 TSHH 223	PAS-TOWR-102 OVERHEAD	215°F		X																			X														RCRA AWFCO MPF 22. SP per ANAP1110PAS. See FAWB Note B-7.	1420/00	300	
49	24 FSL 223	PAS-TOWR-102 PROCESS WATER	10 gpm																																			3 sec delay. SP from instrument data sheet. Active only when 24-TV-223 is open.	1420/02	NA	
50	24 AAH 224	PAS QUENCH BRINE pH	9.5 pH																																	X			1850/12	NA	
51	24 AAL 224	PAS QUENCH BRINE pH	6.5 pH																																	X		SP per Oct 2000 AN PAS/PFS mtg.	1820/10	NA	
52	24 AALL 224	PAS QUENCH BRINE pH	5.5 pH		X																																	SP per Oct 2000 AN PAS/PFS mtg. Alarm to be added to AN-6-D-504 by ANAP1110PAS.	**1851/10**	324	CH 6
53	24 PDAH 225	PAS-SCRB-101 PACKED BED	6 in wc																																	X			1651/10	NA	

ANCDF METAL PARTS FURNACE (MPF) POLLUTION ABATEMENT SYSTEM (PAS) AND PAS FILTER SYSTEM (PFS)

ANCDF MPF PAS/PFS — ALARM AND INTERLOCK MATRIX — **ANCDF MPF PAS/PFS**

ANCDF: P&IDs: AN-1-D-528, AN-6-D-504, -505, -523, -526, -527 and -528; PLC: ICS-CONR-113; INTERLOCK: I-8

F00 - SPARE
F01 - SPARE
F02 - S/D COOLING CONVEYOR
F03 - S/D UNLOAD CONVEYOR
F04 - STOP ZONE 1 TIMER
F05 - STOP ZONE 2 TIMER
F06 - STOP ZONE 3 TIMER
F07 - S/D DISCHARGE AIRLOCK CONVEYOR
F10 - S/D ZONE 3 CONVEYOR
F11 - S/D ZONE 2 CONVEYOR
F12 - S/D ZONE 1 CONVEYOR
F13 - S/D CHARGE AIRLOCK CONVEYOR
F14 - S/D COMBUSTION AIR BLOWER
F15 - S/D RESPECTIVE MPF AFTERBURNER
F16 - S/D RESPECTIVE MPF BURNER
F17 - STOP FEED
MALFUNCTION

P17 - S/D PFS-COOL-114A FAN B (NOTE 1)
P16 - S/D PFS-COOL-114A FAN A (NOTE 1)
P15 - S/D PFS-COOL-114B FAN B (NOTE 1)
P14 - S/D PFS-COOL-114B FAN A (NOTE 1)
P13 - OPEN QUENCH EMERG. PRW (NOTE 1)
P12 - S/D WATER RETURN PUMP
P11 - BKUP BRINE PUMP ON (NOTE 1)
P10 - BKUP CLEAN LIQ PUMP ON (NOTE 1)
P07 - SPARE
P06 - S/D BRINE PUMPS
P05 - S/D CLEAN LIQUOR PUMPS
P04 - S/D 1ST & 2ND STAGE ID FAN
P03 - SPARE
P02 - BYPASS CARBON FILTER (NOTE 1)
P01 - S/D IST STAGE ID FAN
P00 - S/D 2ND STAGE ID FAN
PREALARM
ALERT CH 6

ITEM NUM	TAG NUMBER	DESCRIPTION	SET POINT	MALFUNCTION	B8:010/ 17	16	15	14	13	12	11	10	07	06	05	04	03	02	01	00	B8:011/ 17	16	15	14	13	12	11	10	07	06	05	04	03	02	01	00	PREALARM	ALERT	REMARKS	ALARM BIT B001:XX/XX	MASK WORD B8:XX	
54	24 FSL 226	PAS-SCRB-101 PROCESS WATER	20 gpm																																			X	3 sec delay. SP from instrument data sheet. Active only when 24-XV-226 is energized.	1620/10	NA	CH 6
55	24 XA 228	PAS-PUMP-102 QUENCH BRINE	MALF	X																							X												Switchover to secondary pump on malf. alarm when PAS-PUMP-102 is selected as primary.	1860/11	NA	
56	24 FISL 231	PAS-PUMP-102 SEAL WATER	0.15 gpm																								X												S/D PAS-PUMP-102 if selected as primary (3 sec delay) and switch to secondary pump. Alarm response per Oct 2000 AN PAS/PFS mtg.	1820/00	NA	
57	24 PAL 233	PAS-PUMP-102/3 BRINE DISCH	70 psig																								X												10 sec delay after pump startup. 3 sec delay before S/D of primary pump. Response per Oct 2000 AN PAS/PFS review mtg. SP may change due to updated pump head calculations in ECPs ANAC1038SRL & ANAP1110PAS.	1850/00	NA	
58	24 PALL 233	PAS-PUMP-102/3 BRINE DISCH	40 psig		X																																		Alarm to be added to AN-6-D-504 by ANAC1110PAS.	1851/04	538	
59	24 XA 235	PAS-PUMP-103 QUENCH BRINE	MALF	X																							X												Switchover to secondary pump on malf. alarm when PAS-PUMP-103 is selected as primary.	1862/11	NA	
60	24 FISL 238	PAS-PUMP-103 SEAL WATER	0.15 gpm																								X												S/D PAS-PUMP-103 if selected as primary (3 sec delay) and switch to secondary pump. Alarm response per Oct 2000 AN PAS/PFS mtg.	1820/02	NA	
61	24 LAH 242	PAS-TOWR-102 SUMP	2.0 in																																		X			1450/04	NA	
62	24 LAHH 242	PAS-TOWR-102 SUMP	8.0 in		X	X	X																																Shuts off PRW makeup to quench brine. **Modulates brine spray to control quench tower temp.** Input to PAS NORMAL relay.	1450/02	304	CH 7
63	24 LAH 243	PAS-SCRB-101 PACKED BED	92 in																																		X		SP from P&ID (19 ft 8 in. minus 12 ft 0 in. offset) "Overflow" alarm added per ANAC1117SRL.	TBD	NA	
64	24 LAL 243	PAS-SCRB-101 CLEAN LIQUOR SUMP	24 in																																		X		SP from P&ID (14 ft 0 in. minus 12 ft 0 in. offset). SP is 30 in. above bottom of chimney tray well point. Alarm response per Oct 2000 PAS/PFS mtg.	1650/12	338	
65	24 LSHHH 244	PAS-SCRB-101 SUMP	**72 in**		X	X	X																			X													3 sec delay. Input to PAS NORMAL relay (see FAWB Note B-19). See NOTE 4 for additional interlocks. Alarm response per Oct 2000 PAS/PFS mtg. **LSHH-245 or LAH-245 must also be active.**	1620/02	322	CH 6
66	24 LAH 245	PAS-SCRB-101 SUMP	**60 in**																																		X		Prealarm per Oct 2000 PAS/PFS mtg.	1650/16	322	CH 6
67	24 LAL 245	PAS-SCRB-101 SUMP	**36 in**																																		X		Prealarm per Oct 2000 PAS/PFS mtg.	1650/14	320	CH 6
68	24 LSHH 245	PAS-SCRB-101 SUMP	**66 in**																																				Open 24-DV-216 (deenergize 24-LY-216).	1621/12	NA	CH 6

ANCDF METAL PARTS FURNACE (MPF) POLLUTION ABATEMENT SYSTEM (PAS) AND PAS FILTER SYSTEM (PFS)

ANCDF MPF PAS/PFS — ALARM AND INTERLOCK MATRIX — **ANCDF MPF PAS/PFS**

ANCDF: P&IDs: AN-1-D-528, AN-6-D-504, -505, -523, -526, -527 and -528; PLC: ICS-CONR-113; INTERLOCK: I-8

F00 - SPARE
F01 - SPARE
F02 - S/D COOLING CONVEYOR
F03 - S/D UNLOAD CONVEYOR
F04 - STOP ZONE 1 TIMER
F05 - STOP ZONE 2 TIMER
F06 - STOP ZONE 3 TIMER
F07 - S/D DISCHARGE AIRLOCK CONVEYOR
F10 - S/D ZONE 3 CONVEYOR
F11 - S/D ZONE 2 CONVEYOR
F12 - S/D ZONE 1 CONVEYOR
F13 - S/D CHARGE AIRLOCK CONVEYOR
F14 - S/D COMBUSTION AIR BLOWER
F15 - S/D RESPECTIVE MPF AFTERBURNER
F16 - S/D RESPECTIVE MPF BURNER
F17 - STOP FEED
MALFUNCTION

P17 - S/D PFS-COOL-114A FAN B (NOTE 1)
P16 - S/D PFS-COOL-114A FAN A (NOTE 1)
P15 - S/D PFS-COOL-114B FAN B (NOTE 1)
P14 - S/D PFS-COOL-114B FAN A (NOTE 1)
P13 - OPEN QUENCH EMERG. PRW (NOTE 1)
P12 - S/D WATER RETURN PUMP
P11 - BKUP BRINE PUMP ON (NOTE 1)
P10 - BKUP CLEAN LIQ PUMP ON (NOTE 1)
P07 - SPARE
P06 - S/D BRINE PUMPS
P05 - S/D CLEAN LIQUOR PUMPS
P04 - S/D 1ST & 2ND STAGE ID FAN
P03 - SPARE
P02 - BYPASS CARBON FILTER (NOTE 1)
P01 - S/D IST STAGE ID FAN
P00 - S/D 2ND STAGE ID FAN
PREALARM
ALERT

ITEM NUM	TAG NUMBER			DESCRIPTION		SET POINT	MALF	B8:010/ 17	16	15	14	13	12	11	10	07	06	05	04	03	02	01	00	B8:011/ 17	16	15	14	13	12	11	10	07	06	05	04	03	02	01	00	PREALARM	ALERT	REMARKS	ALARM BIT B001:XX/XX	MASK WORD B8:XX	
69	24	LSLL	245	PAS-SCRB-101	SUMP	**30 in**																																				Close 24-DV-216 (24-LY-216 energized and drive 24-DY-216 to close).	1621/14	NA	CH 6
70	24	LSLLL	246	PAS-SCRB-101	SCRUBBER SUMP	**24 in**		X	X	X								X																								3 sec delay. Input to PAS NORMAL relay (see FAWB Note B-19). Alarm response per Oct 2000 PAS/PFS mtg. **LSLL-245 or LAL-245 must also be active.**	1620/00	320	CH 6
71	24	AAH	247	PAS SCRUBBER	CLEAN LIQ pH	9.5 pH																																		X			1651/02	NA	CH 6
72	24	AAL	247	PAS SCRUBBER	CLEAN LIQ pH	7.5 pH																																	X			SP per Oct 2000 AN PAS/PFS review mtg.	1652/04	NA	
73	24	AALL	247	PAS SCRUBBER	CLEAN LIQ pH	7.0 pH		X																																		RCRA AWFCO MPF 20. See NOTE 3. Alarm added to AN-6-D-504 by ECP ANWP1122SRL. See FAWB Note B-16.	1651/00	TBD	
74	24	FAL	248	CLEAN LIQUOR	TO SCRUBBER	SP-10%																																	X			SP = setpoint entered in controller by operator. Design flow is 799 gpm.	1650/10	NA	
75	24	FALL	248	CLEAN LIQUOR	TO SCRUBBER	600 gpm		X																																		RCRA AWFCO MPF 19. 5 sec delay for alarm. 10 sec delay after pump startup. See NOTE 3.	1650/06	306	
76	24	DAH	249	CLEAN LIQUOR	DENSITY	1.12 sg																																		X		SP per Oct 2000 AN PAS/PFS review mtg.	1651/04	NA	CH 6
77	24	DAHH	249	CLEAN LIQUOR	DENSITY	1.15 sg		X																																		SP per Oct 2000 AN PAS/PFS review mtg.	1651/12	NA	
78	24	XA	249	CLEAN LIQUOR DENSITY MALF		MALF	X																																			Alarm per Oct 2000 AN PAS/PFS review mtg.	1622/00	NA	
79	24	PDAH	266	PAS-SCRB-101	MIST ELIM D.P.	2 in wc																																	X				1651/06	NA	
80	24	XA	285	2nd STAGE ID FAN	TROUBLE	Trouble		X																														X				Alarm response per RFI C-ANCDF-002. Trouble alarm initiated by ASD motor thermal overload which stops the motor.	1224/00	TBD	
81	24	SAH	285A	2nd STAGE ID FAN	SPEED	**1775 rpm**		X																														X				SP per RFI S-ALL-232.	1253/02	TBD	CH 6
82	24	XA	287	1st & 2nd STAGE ID FAN		NOT RUNNING		X			X																																I:210/03 I:210/05	482	
83	24	XA	288	PAS-BLOW-102	2ND STAGE MTR	MALF	X	X																														X				Start I-lock for 2nd stage motor.	1263/11	490	
84	24	PDAH	291	PAS-DMIS-103	DP AT CANDLES	15 in wc																																	X				0650/04	NA	
85	24	PDAHH	291	PAS-DMIS-103	DP AT CANDLES	20 in wc		X																																			0650/12	310	
86	24	LSHH	292	PAS MIST ELIM.	SUMP	66 in																																				3 sec delay. SP per AN-6-D-505. Input to PAS NORMAL relay.	0620/02	NA	
87	24	LAH	293	PAS MIST ELIM.	SUMP	18 in																																		X		SP from AN-6-D-505. Start PAS-PUMP-137 (see FAWB Note B-17).	0650/02	NA	CH 6
88	24	LAHH	293	PAS MIST ELIM.	SUMP	20 in																																				SP per AN-6-D-505.	0650/10	NA	
89	24	LAL	293	PAS MIST ELIM.	SUMP	10 in																																		X		SP per AN-6-D-505.	0650/00	NA	CH 6

ANCDF METAL PARTS FURNACE (MPF) POLLUTION ABATEMENT SYSTEM (PAS) AND PAS FILTER SYSTEM (PFS)

ANCDF MPF PAS/PFS — ALARM AND INTERLOCK MATRIX — **ANCDF MPF PAS/PFS**

ANCDF: P&IDs: AN-1-D-528, AN-6-D-504, -505, -523, -526, -527 and -528; PLC: ICS-CONR-113; INTERLOCK: I-8

B8:010/

Bit	Description
17	F00 - SPARE
16	F01 - SPARE
15	F02 - S/D COOLING CONVEYOR
14	F03 - S/D UNLOAD CONVEYOR
13	F04 - STOP ZONE 1 TIMER
12	F05 - STOP ZONE 2 TIMER
11	F06 - STOP ZONE 3 TIMER
10	F07 - S/D DISCHARGE AIRLOCK CONVEYOR
07	F10 - S/D ZONE 3 CONVEYOR
06	F11 - S/D ZONE 2 CONVEYOR
05	F12 - S/D ZONE 1 CONVEYOR
04	F13 - S/D CHARGE AIRLOCK CONVEYOR
03	F14 - S/D COMBUSTION AIR BLOWER
02	F15 - S/D RESPECTIVE MPF AFTERBURNER
01	F16 - S/D RESPECTIVE MPF BURNER
00	F17 - STOP FEED

B8:011/

Bit	Description
17	P17 - S/D PFS-COOL-114A FAN B (NOTE 1)
16	P16 - S/D PFS-COOL-114A FAN A (NOTE 1)
15	P15 - S/D PFS-COOL-114B FAN B (NOTE 1)
14	P14 - S/D PFS-COOL-114B FAN A (NOTE 1)
13	P13 - OPEN QUENCH EMERG. PRW (NOTE 1)
12	P12 - S/D WATER RETURN PUMP
11	P11 - BKUP BRINE PUMP ON (NOTE 1)
10	P10 - BKUP CLEAN LIQ PUMP ON (NOTE 1)
07	P07 - SPARE
06	P06 - S/D BRINE PUMPS
05	P05 - S/D CLEAN LIQUOR PUMPS
04	P04 - S/D 1ST & 2ND STAGE ID FAN
03	P03 - SPARE
02	P02 - BYPASS CARBON FILTER (NOTE 1)
01	P01 - S/D IST STAGE ID FAN
00	P00 - S/D 2ND STAGE ID FAN

MALFUNCTION — **PREALARM** — **ALERT**

ITEM NUM	TAG NUMBER			DESCRIPTION		SET POINT	B8:010/17	B8:010/16	B8:010/15	B8:010/14	B8:010/13	B8:010/12	B8:010/11	B8:010/10	B8:010/07	B8:010/06	B8:010/05	B8:010/04	B8:010/03	B8:010/02	B8:010/01	B8:010/00	B8:011/17	B8:011/16	B8:011/15	B8:011/14	B8:011/13	B8:011/12	B8:011/11	B8:011/10	B8:011/07	B8:011/06	B8:011/05	B8:011/04	B8:011/03	B8:011/02	B8:011/01	B8:011/00	MALFUNCTION	PREALARM	ALERT	REMARKS	ALARM BIT B001:XX/XX	MASK WORD B8:XX	
90	24	LSLL	294	PAS MIST ELIM.	SUMP	8 in																						X														3 sec delay. SP per AN-6-D-505. Alarm active when 24-HS-293 selected to MPF mist eliminator. Hardwired S/D of pump needs to be disabled when 24-HS-293 is aligned to the spare. (Note 24-HS-293 is not shown on P&ID).	0620/00	438	
91	24	XAH	306	PAS-BLOW-102	2ND STAGE VIB	0.25 in/sec	X																																			3 sec delay. See NOTE 7.	1251/10	548	
92	24	XSHH	306	PAS-BLOW-102	2ND STAGE VIB	0.5 in/sec	X																														X					3 sec delay. S/D 2nd stage, except when running in emergency mode. See NOTE 7.	1220/06	448	CH 6
93	24	TSH	307A-F	2nd STAGE ID FAN	WINDING TEMP	320°F																																X				3 sec delay. Alarm on high temp for any of 24-TSH-307A thru F. SP from vendor info. Response per Oct 2000 AN PAS/PFS mtg.	1220/00	446	CH 6
94	24	TSHH	307A-F	2nd STAGE ID FAN	WINDING TEMP	329°F	X																														X					3 sec delay. Alarm on high-high temp for any of 24-TSHH-307A thru F. S/D 2nd stage, except when running in emergency mode. SP from vendor info. Response per Oct 2000 AN PAS/PFS review mtg.	1222/10	TBD	CH 6
95	24	PDAH	315	PAS-SEPA-101	BRINE FILTER	10.0 psid																																X					1850/14	NA	
96	24	TSH	446A/B	1st STAGE ID FAN	BEARING TEMP	160°F																																X				3 sec delay. SP from vendor info. Response per Oct 2000 AN PAS/PFS review mtg.	**1221/00**	**NA**	CH 6
97	24	TSHH	446A/B	1st STAGE ID FAN	BEARING TEMP	200°F	X																														X					3 sec delay. S/D 1st stage, except when running in emergency mode. SP from vendor info. Response per Oct 2000 AN PAS/PFS mtg.	1221/10	**472**	CH 6
98	24	TSH	447A/B	2nd STAGE ID FAN	BEARING TEMP	160°F																																X				3 sec delay. SP from vendor info. Response per Oct 2000 AN PAS/PFS review mtg.	**1221/02**	TBD	CH 6
99	24	TSHH	447A/B	2nd STAGE ID FAN	BEARING TEMP	200°F	X																														X					3 sec delay. S/D 2nd stage, except when running in emergency mode. SP from vendor info. Response per Oct 2000 AN PAS/PFS mtg.	1221/12	484	CH 6
100	24	IAH	500	PAS-BLOW-102	2ND STAGE MTR	**270 amp**																																X				2-min delay on startup. SP per RFI S-ALL-232.	1250/02	**NA**	CH 6
101	24	TAH	509	PAS-TOWR-102	QNCH TWR OVHD	200°F																																X				(see FAWB Note B-7)	1450/10	512	
102	24	TSHHH	510	PAS-TOWR-102	QNCH TWR OVHD	250°F	X	X	X																																	SP from instrument data sheet and ECP ANAC849ICS. Input to PAS NORMAL relay. See FAWB Note B-7.	1420/10	316	
103	24	LSLL	513	PAS-SCRB-101 CLEAN LIQUOR SUMP		**20 in**	X										X																									3 sec delay. SP from P&ID (14 ft 0 in. minus 12 ft 0 in. offset). SP is 9 in. above bottom of chimney tray well point. Alarm response per Oct 2000 PAS/PFS mtg.	1620/12	338	CH 6

ANCDF METAL PARTS FURNACE (MPF) POLLUTION ABATEMENT SYSTEM (PAS) AND PAS FILTER SYSTEM (PFS)

ANCDF MPF PAS/PFS — ALARM AND INTERLOCK MATRIX — **ANCDF MPF PAS/PFS**

ANCDF: P&IDs: AN-1-D-528, AN-6-D-504, -505, -523, -526, -527 and -528; PLC: ICS-CONR-113; INTERLOCK: I-8

B8:010/

F00 - SPARE
F01 - SPARE
F02 - S/D COOLING CONVEYOR
F03 - S/D UNLOAD CONVEYOR
F04 - STOP ZONE 1 TIMER
F05 - STOP ZONE 2 TIMER
F06 - STOP ZONE 3 TIMER
F07 - S/D DISCHARGE AIRLOCK CONVEYOR
F10 - S/D ZONE 3 CONVEYOR
F11 - S/D ZONE 2 CONVEYOR
F12 - S/D ZONE 1 CONVEYOR
F13 - S/D CHARGE AIRLOCK CONVEYOR
F14 - S/D COMBUSTION AIR BLOWER
F15 - S/D RESPECTIVE MPF AFTERBURNER
F16 - S/D RESPECTIVE MPF BURNER
F17 - STOP FEED
MALFUNCTION

B8:011/

P17 - S/D PFS-COOL-114A FAN B (NOTE 1)
P16 - S/D PFS-COOL-114A FAN A (NOTE 1)
P15 - S/D PFS-COOL-114B FAN B (NOTE 1)
P14 - S/D PFS-COOL-114B FAN A (NOTE 1)
P13 - OPEN QUENCH EMERG. PRW (NOTE 1)
P12 - S/D WATER RETURN PUMP
P11 - BKUP BRINE PUMP ON (NOTE 1)
P10 - BKUP CLEAN LIQ PUMP ON (NOTE 1)
P07 - SPARE
P06 - S/D BRINE PUMPS
P05 - S/D CLEAN LIQUOR PUMPS
P04 - S/D 1ST & 2ND STAGE ID FAN
P03 - SPARE
P02 - BYPASS CARBON FILTER (NOTE 1)
P01 - S/D IST STAGE ID FAN
P00 - S/D 2ND STAGE ID FAN
PREALARM
ALERT

ITEM NUM	TAG NUMBER			DESCRIPTION		SET POINT	17	16	15	14	13	12	11	10	07	06	05	04	03	02	01	00	17	16	15	14	13	12	11	10	07	06	05	04	03	02	01	00	PREALARM	ALERT	REMARKS	ALARM BIT B001:XX/XX	MASK WORD B8:XX
104	24	PDAH	582	PAS-SCRB-101	CLEAN LIQ FIL	10.0 psid																																		X		1650/02	NA
105	24	PDAH	587	PAS-PUMP-132	DISCH FILTER	5.0 psid																																		X		0650/06	NA
106	24	FSL	666	PAS-SCRB-101	PURGE PERMISS	1500 scfm																																		X	Min flow for purge; 3 sec delay. SP from instrument data sheet.	1620/16	NA
107	24	FSLL	666	PAS-SCRB-101	NFPA BURN S/D	900 scfm		X	X	X																															3 sec delay for stop feed. SP from instrument data sheet. BMS 3-P running interlock. BMS tag #24-FSLL-667 will be corrected by ANCDF SC.	1620/14	486
108	24	FISL	760	PAS-PUMP-137	WTR RTN PUMP	0.15 gpm																						X													3 sec delay. SP from instrument data sheet.	0620/12	NA
109	24	XA	778	1st STAGE ID FAN	TROUBLE	Trouble		X																													X				Alarm response per RFI C-ANCDF-002. Trouble alarm initiated by ASD motor thermal overload which stops the motor.	1223/16	TBD
110	24	SAH	778A	1st STAGE ID FAN	SPEED	**1775 rpm**		X																													X				SP per RFI S-ALL-232.	1253/00	TBD
111	24	XA	910	PAS-PUMP-134 RECVD WTR FEED PMP		MALF	X																																		Switchover to backup pump on malf. alarm when PAS-PUMP-134 is selected as primary.	4060/11	NA
112	24	PSLL	913	RECVD WTR FEED PUMP DISCH PRESS		70 psig																																			3 sec delay. SP from TOCDF. Hardwired S/D of PAS-PUMP-134/135.	4020/00	NA
113	24	XA	915	PAS-PUMP-135 RECVD WTR FEED PMP		MALF	X																																		Switchover to backup pump on malf. alarm when PAS-PUMP-135 is selected as primary.	4061/11	NA
114	24	PSL	919	RECVD WTR FEED PUMP DISCH PRESS		85 psig																																			3 sec delay. Switchover to backup pump. SP from TOCDF.	4020/02	NA
115	24	LAH	920	RECOVERED WATER TANK LEVEL HIGH		12'0"																																		X	SP per AN-6-D-510	4050/00	NA
116	24	LAL	920	RECOVERED WATER TANK LEVEL LOW		2'0"																																		X	SP per AN-6-D-510	4050/02	NA
117	24	LSHH	921	RECVD WATER TANK LEVEL HIGH HIGH		13'6"																																			3 sec delay. SP per AN-6-D-510. Hardwired S/D of PAS-PUMP-110.	4020/04	NA
118	24	LSLL	922	RECVD WATER TANK LEVEL LOW LOW		1'4"																																			3 sec delay. SP per AN-6-D-510. S/D PAS-PUMP-134/135.	4020/06	NA
119	24	TSH	971 A-F	1st STAGE ID FAN MTR WINDING TEMP		320°F		X																																	3 sec delay. Alarm on high temp for any of 24-TSH-971A thru F. SP from vendor info. Response per Oct 2000 AN PAS/PFS mtg.	1221/16	464
120	24	TSHH	971 A-F	1st STAGE ID FAN MTR WINDING TEMP		329°F																															X				3 sec delay. Alarm on high-high temp for any of 24-TSHH-971A thru F. S/D 1st stage, except when running in emergency mode. SP from vendor info. Response per Oct 2000 AN PAS/PFS review mtg.	1222/12	TBD

CH 6

CH 6

ANCDF METAL PARTS FURNACE (MPF) POLLUTION ABATEMENT SYSTEM (PAS) AND PAS FILTER SYSTEM (PFS)

ANCDF MPF PAS/PFS — ALARM AND INTERLOCK MATRIX — **ANCDF MPF PAS/PFS**

ANCDF: P&IDs: AN-1-D-528, AN-6-D-504, -505, -523, -526, -527 and -528; PLC: ICS-CONR-113; INTERLOCK: I-8

B8:010/

	17	16	15	14	13	12	11	10	07	06	05	04	03	02	01	00
F00 - SPARE																
F01 - SPARE																
F02 - S/D COOLING CONVEYOR																
F03 - S/D UNLOAD CONVEYOR																
F04 - STOP ZONE 1 TIMER																
F05 - STOP ZONE 2 TIMER																
F06 - STOP ZONE 3 TIMER																
F07 - S/D DISCHARGE AIRLOCK CONVEYOR																
F10 - S/D ZONE 3 CONVEYOR																
F11 - S/D ZONE 2 CONVEYOR																
F12 - S/D ZONE 1 CONVEYOR																
F13 - S/D CHARGE AIRLOCK CONVEYOR																
F14 - S/D COMBUSTION AIR BLOWER																
F15 - S/D RESPECTIVE MPF AFTERBURNER																
F16 - S/D RESPECTIVE MPF BURNER																
F17 - STOP FEED																
MALFUNCTION																

B8:011/

	17	16	15	14	13	12	11	10	07	06	05	04	03	02	01	00
P17 - S/D PFS-COOL-114A FAN B (NOTE 1)																
P16 - S/D PFS-COOL-114A FAN A (NOTE 1)																
P15 - S/D PFS-COOL-114B FAN B (NOTE 1)																
P14 - S/D PFS-COOL-114B FAN A (NOTE 1)																
P13 - OPEN QUENCH EMERG. PRW (NOTE 1)																
P12 - S/D WATER RETURN PUMP																
P11 - BKUP BRINE PUMP ON (NOTE 1)																
P10 - BKUP CLEAN LIQ PUMP ON (NOTE 1)																
P07 - SPARE																
P06 - S/D BRINE PUMPS																
P05 - S/D CLEAN LIQUOR PUMPS																
P04 - S/D 1ST & 2ND STAGE ID FAN																
P03 - SPARE																
P02 - BYPASS CARBON FILTER (NOTE 1)																
P01 - S/D IST STAGE ID FAN																
P00 - S/D 2ND STAGE ID FAN																
PREALARM																
ALERT																

ITEM NUM	TAG NUMBER			DESCRIPTION		SET POINT	ALERT	REMARKS	ALARM BIT B001:XX/XX	MASK WORD B8:XX	
121	24	IAH	972	PAS-BLOW-102	1ST STAGE MTR	**270 amp**	X	2-min delay on startup. SP per RFI S-ALL-232.	1250/04	**NA**	CH 6
122	24	XAH	973	PAS-BLOW-102	1ST STAGE VIB	0.25 in/sec		3 sec delay. See NOTE 7.	1251/02	546	
123	24	XSHH	973	PAS-BLOW-102	1ST STAGE VIB	0.5 in/sec		3 sec delay.S/D 1st stage, except when running in emergency mode. See NOTE 7.	1222/00	468	
124	24	XA	975	PAS-BLOW-102	1ST STAGE MTR	MALF		Start I-lock for 1st stage motor.	1261/11	488	
125	114	ZS	093B	PFS-FILT-110 BYPASS DAMPER		NOT CLOSED		Based on Oct 2000 PAS/PFS mtg., this is not an agent feed permissive as stated on AN-6-D-526 Note 4.	5061/14	NA	
126	114	XA	096	PFS-BURN-102 EXH MOIST ANALYZER		> 10% DIFF	X	Alarm when MIT-096A & B deviation exceeds 10% of upper range value based on ROHA.	TBD	NA	
127	114	MAH	096A	PFS-BURN-102 EXH REL HUMIDITY		60%RH	X	Instantaneous alarm. Ref: ANAP1110PAS.	5051/10	NA	
128	114	**MSHH**	096A	PFS-BURN-102 EXH REL HUMIDITY		80%RH		Instantaneous alarm. Ref: ANAP1110PAS. See NOTE 8.	5020/00	TBD	CH 6
129	114	XS	096A	PFS-BURN-102 EXH MOIST ANALYZER		MALF		On time delay. Remove instrument from ROHA calculation if it is the active unit.	5020/04	NA	
130	114	MAH	096B	PFS-BURN-102 EXH REL HUMIDITY		60%RH	X	Instantaneous alarm. Ref: ANAP1110PAS.	5051/12	NA	
131	114	**MSHH**	096B	PFS-BURN-102 EXH REL HUMIDITY		80%RH		Instantaneous alarm. Ref: ANAP1110PAS. See NOTE 8.	5020/02	TBD	CH 6
132	114	XS	096B	PFS-BURN-102 EXH MOIST ANALYZER		MALF		On time delay. Remove instrument from ROHA calculation if it is the active unit.	5020/06	NA	
133	114	MAH	096C	PFS-BURN-102 EXH REL HUMIDITY		52%RH	X	ROHA. Ref: ANAP1110PAS.	TBD	NA	
134	114	MAHH	096C	PFS-BURN-102 EXH REL HUMIDITY		55%RH		ROHA. Ref: ANAP1110PAS. See NOTE 8.	TBD	NA	
135	114	TSHH	097	PFS-BURN-102 EXHAUST TEMP		180°F		Alarm response per Oct 2000 AN PAS/PFS mtg.	5020/10	TBD	
136	114	TISH	100	PFS-BURN-102 EXHAUST TEMP		168°F	X	5 sec delay. SP per DSIC.	5020/12	NA	
137	114	TSHH	100	PFS-BURN-102 EXHAUST TEMP		176°F		5 sec delay. S/D PFS-BURN-102. SP per DSIC.	5020/14	NA	
138	114	XA	127	PFS-BURN-102 BURNER TROUBLE S/D		LOCKOUT		5 sec delay. Per Oct 2000 PAS/PFS review mtg., stop feed only if carbon filter unit is online.	5021/00	TDB	
139	114	FSL	133	PFS-PUMP-142 SUCTION FLOW		2.4 gpm		S/D PFS-PUMP-142 via 114-FV-133 after pump is started manually and switched to auto mode.	TBD	NA	
140	114	XA	354	CLEAN LIQ PUMP A (PFS-PUMP-136)		MALF		Switchover to backup pump on malf. alarm when PFS-PUMP-136 is selected as primary.	1660/11	NA	

ANCDF METAL PARTS FURNACE (MPF) POLLUTION ABATEMENT SYSTEM (PAS) AND PAS FILTER SYSTEM (PFS)

ANCDF MPF PAS/PFS — ALARM AND INTERLOCK MATRIX — **ANCDF MPF PAS/PFS**

ANCDF: P&IDs: AN-1-D-528, AN-6-D-504, -505, -523, -526, -527 and -528; PLC: ICS-CONR-113; INTERLOCK: I-8

B8:010/

	17	16	15	14	13	12	11	10	07	06	05	04	03	02	01	00
F00 - SPARE																
F01 - SPARE																
F02 - S/D COOLING CONVEYOR																
F03 - S/D UNLOAD CONVEYOR																
F04 - STOP ZONE 1 TIMER																
F05 - STOP ZONE 2 TIMER																
F06 - STOP ZONE 3 TIMER																
F07 - S/D DISCHARGE AIRLOCK CONVEYOR																
F10 - S/D ZONE 3 CONVEYOR																
F11 - S/D ZONE 2 CONVEYOR																
F12 - S/D ZONE 1 CONVEYOR																
F13 - S/D CHARGE AIRLOCK CONVEYOR																
F14 - S/D COMBUSTION AIR BLOWER																
F15 - S/D RESPECTIVE MPF AFTERBURNER																
F16 - S/D RESPECTIVE MPF BURNER																
F17 - STOP FEED																
MALFUNCTION																

B8:011/

	17	16	15	14	13	12	11	10	07	06	05	04	03	02	01	00
P17 - S/D PFS-COOL-114A FAN B (NOTE 1)																
P16 - S/D PFS-COOL-114A FAN A (NOTE 1)																
P15 - S/D PFS-COOL-114B FAN B (NOTE 1)																
P14 - S/D PFS-COOL-114B FAN A (NOTE 1)																
P13 - OPEN QUENCH EMERG. PRW (NOTE 1)																
P12 - S/D WATER RETURN PUMP																
P11 - BKUP BRINE PUMP ON (NOTE 1)																
P10 - BKUP CLEAN LIQ PUMP ON (NOTE 1)																
P07 - SPARE																
P06 - S/D BRINE PUMPS																
P05 - S/D CLEAN LIQUOR PUMPS																
P04 - S/D 1ST & 2ND STAGE ID FAN																
P03 - SPARE																
P02 - BYPASS CARBON FILTER (NOTE 1)																
P01 - S/D IST STAGE ID FAN																
P00 - S/D 2ND STAGE ID FAN																
PREALARM																
ALERT																

ITEM NUM	TAG NUMBER			DESCRIPTION	SET POINT	REMARKS	ALARM BIT B001:XX/XX	MASK WORD B8:XX	
141	114	FISL	356	CLEAN LIQ PUMP A SEAL WATER	0.15 gpm	S/D PFS-PUMP-136 if selected as primary (3 sec delay) and switch to secondary pump. Alarm response per Oct 2000 AN PAS/PFS mtg.	1620/04	NA	
142	114	PAL	358	CLEAN LIQ PUMP DISCH PRESS	50 psig	10 sec delay after pump startup. 3 sec delay before S/D of primary pump. Response per Oct 2000 PAS/PFS review mtg.	1650/00	514	
143	114	PALL	358	CLEAN LIQ PUMP DISCH PRESS	25 psig	RCRA AWFCO MPF 23. See NOTE 3. 10 sec delay after pump startup. Response per Oct 2000 PAS/PFS review mtg.	1650/04	308	
144	114	XA	361	CLEAN LIQ PUMP B (PFS-PUMP-137)	MALF	Switchover to backup pump on malf. alarm when PFS-PUMP-137 is selected as primary.	1662/11	NA	
145	114	FISL	363	CLEAN LIQ PUMP B SEAL WATER	0.15 gpm	S/D PFS-PUMP-137 if selected as primary (3 sec delay) and switch to secondary pump. Alarm response per Oct 2000 AN PAS/PFS mtg.	1620/06	NA	
146	114	PDAH	364	PFS-COOL-114B CLEAN LIQ COOLER	**45 psid**	SP per RFI S-ALL-232.	0850/06	NA	CH 6
147	114	PDAL	364	PFS-COOL-114B CLEAN LIQ COOLER	**20 psid**	SP per RFI S-ALL-232.	0850/04	NA	CH 6
148	114	TAH	419	PFS-BURN-102 EXHAUST TEMP	172°F	SP per RFI S-ALL-241 R1.	5051/14	NA	
149	114	TAL	419	PFS-BURN-102 EXHAUST TEMP	135°F	SP per RFI S-ALL-241 R1.	5051/16	NA	
150	114	PDAH	438A	PFS-FILT-110 PREFILTER BANK	2.0 in wc	SP per RFI S-ALL-232.	5050/00	NA	
151	114	PDAH	438B	PFS-FILT-110 1st HEPA FILTER BANK	4.0 in wc	SP per RFI S-ALL-232.	5050/02	NA	
152	114	PDAH	438C	PFS-FILT-110 1st CARBON FILT BANK	3.5 in wc	SP per RFI S-ALL-232.	5050/04	NA	
153	114	PDAH	438D	PFS-FILT-110 2nd CARBON FILT BANK	3.5 in wc	SP per RFI S-ALL-232.	5050/06	NA	
154	114	PDAH	438E	PFS-FILT-110 2nd HEPA FILTER BANK	4.0 in wc	SP per RFI S-ALL-232.	5050/10	NA	
155	114	PDAH	438F	PFS-FILT-110 OVERALL DP	16 in wc	SP per RFI S-ALL-232.	5050/12	NA	
156	114	XA	484	PFS-COOL-114B FAN A	TROUBLE	On time delay. Alarm generated by XSHH-526 or VFD in fault lockout. VFD internally configured to stop motor (see RFI C-PBCDF-002).	0821/04	NA	
157	114	XA	485	PFS-COOL-114B FAN B	TROUBLE	On time delay. Alarm generated by XSHH-524 or VFD in fault lockout. VFD internally configured to stop motor (see RFI C-PBCDF-002).	0821/06	NA	
158	114	XA	486	PFS-COOL-114A FAN B	TROUBLE	On time delay. Alarm generated by XSHH-542 or VFD in fault lockout. VFD internally configured to stop motor (see RFI C-PBCDF-002).	0821/02	NA	

ANCDF METAL PARTS FURNACE (MPF) POLLUTION ABATEMENT SYSTEM (PAS) AND PAS FILTER SYSTEM (PFS)

ANCDF MPF PAS/PFS — ALARM AND INTERLOCK MATRIX — **ANCDF MPF PAS/PFS**

ANCDF: P&IDs: AN-1-D-528, AN-6-D-504, -505, -523, -526, -527 and -528; PLC: ICS-CONR-113; INTERLOCK: I-8

B8:010/

Bit	Description
17	F00 - SPARE
16	F01 - SPARE
15	F02 - S/D COOLING CONVEYOR
14	F03 - S/D UNLOAD CONVEYOR
13	F04 - STOP ZONE 1 TIMER
12	F05 - STOP ZONE 2 TIMER
11	F06 - STOP ZONE 3 TIMER
10	F07 - S/D DISCHARGE AIRLOCK CONVEYOR
07	F10 - S/D ZONE 3 CONVEYOR
06	F11 - S/D ZONE 2 CONVEYOR
05	F12 - S/D ZONE 1 CONVEYOR
04	F13 - S/D CHARGE AIRLOCK CONVEYOR
03	F14 - S/D COMBUSTION AIR BLOWER
02	F15 - S/D RESPECTIVE MPF AFTERBURNER
01	F16 - S/D RESPECTIVE MPF BURNER
00	F17 - STOP FEED

B8:011/

Bit	Description
17	MALFUNCTION
16	P17 - S/D PFS-COOL-114A FAN B (NOTE 1)
15	P16 - S/D PFS-COOL-114A FAN A (NOTE 1)
14	P15 - S/D PFS-COOL-114B FAN B (NOTE 1)
13	P14 - S/D PFS-COOL-114B FAN A (NOTE 1)
12	P13 - OPEN QUENCH EMERG. PRW (NOTE 1)
11	P12 - S/D WATER RETURN PUMP
10	P11 - BKUP BRINE PUMP ON (NOTE 1)
07	P10 - BKUP CLEAN LIQ PUMP ON (NOTE 1)
06	P07 - SPARE
05	P06 - S/D BRINE PUMPS
04	P05 - S/D CLEAN LIQUOR PUMPS
03	P04 - S/D 1ST & 2ND STAGE ID FAN
02	P03 - SPARE
01	P02 - BYPASS CARBON FILTER (NOTE 1)
00	P01 - S/D IST STAGE ID FAN
	P00 - S/D 2ND STAGE ID FAN
	PREALARM
	ALERT

ITEM NUM	TAG NUMBER	DESCRIPTION	SET POINT	B8:010/ 17	16	15	14	13	12	11	10	07	06	05	04	03	02	01	00	B8:011/ 17	16	15	14	13	12	11	10	07	06	05	04	03	02	01	00	ALERT	REMARKS	ALARM BIT B001:XX/XX	MASK WORD B8:XX	
159	114 PDAH 487A	PFS-FILT-113 PREFILTER BANK	2.0 in wc																																	X	SP per RFI S-ALL-232.	5050/14	NA	
160	114 PDAH 487B	PFS-FILT-113 1st HEPA FILTER BANK	4.0 in wc																																	X	SP per RFI S-ALL-232.	5050/16	NA	
161	114 PDAH 487C	PFS-FILT-113 1st CARBON FILT BANK	3.5 in wc																																	X	SP per RFI S-ALL-232.	5051/00	NA	
162	114 PDAH 487D	PFS-FILT-113 2nd CARBON FILT BANK	3.5 in wc																																	X	SP per RFI S-ALL-232.	5051/02	NA	
163	114 PDAH 487E	PFS-FILT-113 2nd HEPA FILTER BANK	4.0 in wc																																	X	SP per RFI S-ALL-232.	5051/04	NA	
164	114 PDAH 487F	PFS-FILT-113 OVERALL DP	16 in wc																																	X	SP per RFI S-ALL-232.	5051/06	NA	
165	114 PDAH 510	PFS-COOL-114A CLEAN LIQ COOLER	**45 psid**																																	X	SP per RFI S-ALL-232.	0850/02	NA	CH 6
166	114 PDAL 510	PFS-COOL-114A CLEAN LIQ COOLER	**20 psid**																																	X	SP per RFI S-ALL-232.	0850/00	NA	CH 6
167	114 TAH 522	PFS-COOL-114B CLEAN LIQ COOLER	135°F																																	X	SP per RFI S-ALL-232.	0850/16	NA	
168	114 TAL 522	PFS-COOL-114B CLEAN LIQ COOLER	**100°F**																			X	X														SP per RFI S-ALL-232. Instant alarm, 120-sec delay for cooler S/D (see FAWB Note B-20).	0850/14	NA	CH 9
169	114 XSH 523	PFS-COOL-114B FAN B VIBRATION	See NOTE 6																																	X	5 sec delay (vendor info shows additional hardwired startup time delay relay)	0820/06	NA	
170	114 XSHH 524	PFS-COOL-114B FAN B VIBRATION	See NOTE 6																			X															5 sec delay (vendor info shows additional hardwired startup time delay relay)	0820/16	NA	
171	114 XSH 525	PFS-COOL-114B FAN A VIBRATION	See NOTE 6																																	X	5 sec delay (vendor info shows additional hardwired startup time delay relay)	0820/04	NA	
172	114 XSHH 526	PFS-COOL-114B FAN A VIBRATION	See NOTE 6																				X														5 sec delay (vendor info shows additional hardwired startup time delay relay)	0820/14	NA	
173	114 SAH 527A	PFS-COOL-114B FAN B SPEED	**1760 rpm**																			X															SP per RFI S-ALL-232 (66Hz = 1980 rpm).	0851/06	NA	CH 6
174	114 SAH 528A	PFS-COOL-114B FAN A SPEED	**1760 rpm**																				X														SP per RFI S-ALL-232 (66Hz = 1980 rpm).	0851/04	NA	CH 6
175	114 TAH 539	PFS-COOL-114A CLEAN LIQ COOLER	135°F																																	X	SP per RFI S-ALL-232.	0850/12	NA	
176	114 TAL 539	PFS-COOL-114A CLEAN LIQ COOLER	**100°F**																	X	X																SP per RFI S-ALL-232. Instant alarm, 120-sec delay for cooler S/D (see FAWB Note B-20).	0850/10	NA	CH 9
177	114 XSH 541	PFS-COOL-114A FAN B VIBRATION	See NOTE 6																																	X	5 sec delay (vendor info shows additional hardwired startup time delay relay)	0820/02	NA	
178	114 XSHH 542	PFS-COOL-114A FAN B VIBRATION	See NOTE 6																	X																	5 sec delay (vendor info shows additional hardwired startup time delay relay)	0820/12	NA	
179	114 XSH 543	PFS-COOL-114A FAN A VIBRATION	See NOTE 6																																	X	5 sec delay (vendor info shows additional hardwired startup time delay relay)	0820/00	NA	
180	114 XSHH 544	PFS-COOL-114A FAN A VIBRATION	See NOTE 6																		X																5 sec delay (vendor info shows additional hardwired startup time delay relay)	0820/10	NA	
181	114 SAH 545A	PFS-COOL-114A FAN B SPEED	**1760 rpm**																	X																	SP per RFI S-ALL-232 (66Hz = 1980 rpm).	0851/02	NA	CH 6

ANCDF METAL PARTS FURNACE (MPF) POLLUTION ABATEMENT SYSTEM (PAS) AND PAS FILTER SYSTEM (PFS)

ANCDF MPF PAS/PFS — ALARM AND INTERLOCK MATRIX — **ANCDF MPF PAS/PFS**

ANCDF: P&IDs: AN-1-D-528, AN-6-D-504, -505, -523, -526, -527 and -528; PLC: ICS-CONR-113; INTERLOCK: I-8

B8:010/

F00 - SPARE
F01 - SPARE
F02 - S/D COOLING CONVEYOR
F03 - S/D UNLOAD CONVEYOR
F04 - STOP ZONE 1 TIMER
F05 - STOP ZONE 2 TIMER
F06 - STOP ZONE 3 TIMER
F07 - S/D DISCHARGE AIRLOCK CONVEYOR
F10 - S/D ZONE 3 CONVEYOR
F11 - S/D ZONE 2 CONVEYOR
F12 - S/D ZONE 1 CONVEYOR
F13 - S/D CHARGE AIRLOCK CONVEYOR
F14 - S/D COMBUSTION AIR BLOWER
F15 - S/D RESPECTIVE MPF AFTERBURNER
F16 - S/D RESPECTIVE MPF BURNER
F17 - STOP FEED
MALFUNCTION

B8:011/

P17 - S/D PFS-COOL-114A FAN B (NOTE 1)
P16 - S/D PFS-COOL-114A FAN A (NOTE 1)
P15 - S/D PFS-COOL-114B FAN B (NOTE 1)
P14 - S/D PFS-COOL-114B FAN A (NOTE 1)
P13 - OPEN QUENCH EMERG. PRW (NOTE 1)
P12 - S/D WATER RETURN PUMP
P11 - BKUP BRINE PUMP ON (NOTE 1)
P10 - BKUP CLEAN LIQ PUMP ON (NOTE 1)
P07 - SPARE
P06 - S/D BRINE PUMPS
P05 - S/D CLEAN LIQUOR PUMPS
P04 - S/D 1ST & 2ND STAGE ID FAN
P03 - SPARE
P02 - BYPASS CARBON FILTER (NOTE 1)
P01 - S/D IST STAGE ID FAN
P00 - S/D 2ND STAGE ID FAN
PREALARM
ALERT

ITEM NUM	TAG NUMBER			DESCRIPTION	SET POINT	17	16	15	14	13	12	11	10	07	06	05	04	03	02	01	00	17	16	15	14	13	12	11	10	07	06	05	04	03	02	01	00	REMARKS	ALARM BIT B001:XX/XX	MASK WORD B8:XX	
182	114	SAH	546A	PFS-COOL-114A FAN A SPEED	**1760 rpm**																		X															SP per RFI S-ALL-232 (66Hz = 1980 rpm).	0851/00	NA	CH 6
183	114	XA	552	PFS-COOL-114A FAN A	TROUBLE																		X															On time delay. Alarm generated by XSHH-544 or VFD in fault lockout. VFD internally configured to stop motor (see RFI C-PBCDF-002).	0821/00	NA	
184	MON	ACAM	129	ACAMS COMMON STACK	NOTE 5		X																															RCRA AWFCO for DFS, LIC, and MPF. DICO from ICS-CONR-112.	B4:31/00	496	
185	MON	ACAM	129	ACAMS COMMON STACK	MALF	X	X																															RCRA AWFCO for DFS, LIC, and MPF. DICO from ICS-CONR-112.	B4:31/00	496	
186	MON	ACAM	129	ACAMS COMMON STACK	OFFLINE		X																															RCRA AWFCO for DFS, LIC, and MPF. DICO from ICS-CONR-112.	B4:31/00	496	
187	MON	ACAM	129	ACAMS COMMON STACK	NOT STAGGERED		X																															RCRA AWFCO for DFS, LIC, and MPF. DICO from ICS-CONR-112.	B4:31/00	496	
188	MON	ACAM	167	ACAMS MPF PAS	NOTE 5		X																															RCRA AWFCO.	4620/06	510	
189	MON	ACAM	167	ACAMS MPF PAS	MALF	X	X																															RCRA AWFCO.	4620/06	510	
190	MON	ACAM	167	ACAMS MPF PAS	OFFLINE		X																															RCRA AWFCO.	4620/06	510	
191				BRA TANKS LVL HI-HI / UNAVAILABLE	DICO		X																															RCRA AWFCO MPF 24. See BRA FAWB for tag #s and setpoints.	**B4:23/02**	**498**	CH 6

NOTE 1: P02, P10, P11, P13, P14, P15, P16, and P17 responses are not part of the deathwish relay. These responses are included as column headings for presentation clarity.

NOTE 2: The ANCDF MPF CEMS alarm configuration is based on discussions held at ANCDF in Sept 2000. ANCDF will have redundant RCRA CEMS at the MPF afterburner exhaust, and single process CEMS units at the primary chamber exhaust and at the ID fans. The ID fan CEMS will not have CON alarms associated with them. The primary chamber exhaust CEMS are listed in the MPF FAWB. The referenced code and RFI S-ALL-249 do not reflect this configuration. ANCDF will revise the code to match.

NOTE 3: AWFCO alarm setpoints reflect the proposed normal operational setpoints submitted to ADEM for STB.

NOTE 4: 24-LSHHH-244 additional interlocks: 1) close 24-XV-226 and inhibit timer activation, 2) close 24-XY-250B/D, 3) close 24-XY-264B/D. Also when controllers are in AUTO, 1) close 24-LV-243, 2) close 24-LV-245, 3) close 24-AV-247, 4) close 24-AV-224.

NOTE 5: Per Sept 2000 ANCDF discussions, ACAMS RCRA AWFCO setpoints will be 0.2 ASC (ROHA) and 1.0 ASC (instantaneous). A prealarm at 0.2 ASC (instantaneous) will also be provided. Allowable stack concentration (ASC) for chemical agent are (mg/m3): GB= 0.0003, H/HD/HT= 0.03, and VX=0.0003.

NOTE 6: After the Oct 2000 AN PAS/PFS review meeting, the DSIC investigated the clean liquor air cooler vibration alarm setpoints. They found that the Murphy vibration switches are set by turning an uncalibrated screw. Specific vibration units could not be determined. The high vibration switch is set by turning the screw 1/4 turn past its start-up trip point and the high-high switch is set by turning the screw 1/2 turn past its start-up trip point.

NOTE 7: PAS exhaust blower vibration alarms reflect the current design. Per RFI C-ANCDF-005, the blower foundation design requires that the foundation vibration be < 1 mil double amplitude. This requirment was the basis for recommended setpoints in RFI S-ALL-0232. The vibration alarm setpoints may be changed, or new alarms added, to meet the foundation vibration design limits.

NOTE 8: At the Oct 2000 ANCDF PAS/PFS review meetings, the ANCDF SC stated that there would be no stop feed interlocks associated with the moisture analyzer alarms. ECP ANAP1110PAS, however, modified AN-6-D-526 Note 13 to state that the MSHH/MAHH alarms would generate a stop feed. The ANCDF A&I matrices reflect the SC's current position, but can be updated if ANCDF implements the design configuration.

PBCDF DEACTIVATION FURNACE SYSTEM (DFS) POLLUTION ABATEMENT SYSTEM (PAS) AND PAS FILTER SYSTEM (PFS)

PBCDF DFS PAS/PFS

ALARM AND INTERLOCK MATRIX

PBCDF DFS PAS/PFS

P&IDs: PB-6-D-506,-507, -508, -509, -523, -524,-527, -530, and -531, PB-6-H-504
PLC: ICS-CONR-112; INTERLOCK: I-10

F00 - SPARE
F01 - CLOSE ISOLATION VALVES
F02 - SHUTDOWN KILN LUBE OIL
F03 - SHUTDOWN HEATED DISCHARGE CONVEYOR
F04 - SHUTDOWN HEATED DISCHARGE CONVEYOR HEATERS
F05 - SHUTDOWN KILN DRIVE
F06 - OSCILLATE KILN DRIVE
F07 - SHUTDOWN AFTERBURNER COMBUSTION AIR BLOWER
F10 - SHUTDOWN AFTERBURNER #2
F11 - SHUTDOWN AFTERBURNER #1
F12 - SHUTDOWN KILN COMBUSTION AIR BLOWER
F13 - SHUTDOWN KILN BURNER
F14 - CLOSE KILN SHROUD DAMPERS
F15 - OPEN KILN SHROUD DAMPERS
F16 - SPARE
F17 - STOP FEED
MALFUNCTION

P17 - S/D PFS-COOL-115A FAN B (NOTE 1)
P16 - S/D PFS-COOL-115A FAN A (NOTE 1)
P15 - SD PFS-COOL-115B FAN B (NOTE 1)
P14 - S/D PFS-COOL-115B FAN A (NOTE 1)
P13 - S/D MIST ELIM WATER RETURN PUMP
P12 - SWITCHOVER BRINE PUMP TO BACKUP (NOTE 1)
P11 - SWITCHOVER CL LIQ PUMP TO BACKUP (NOTE 1)
P10 - BYPASS CARBON FILTER (NOTE 1)
P07 - S/D BRINE PUMPS
P06 - S/D CLEAN LIQUOR PUMPS
P05 - S/D PFS-COOL-115C FAN B (NOTE 1)
P04 - S/D PFS-COOL-115C FAN A (NOTE 1)
P03 - S/D PFS-COOL-115D FAN B (NOTE 1)
P02 - S/D PFS-COOL-115D FAN A (NOTE 1)
P01 - S/D IST STAGE ID FAN
P00 - S/D 2ND STAGE ID FAN
PREALARM

ITEM NUM	TAG NUMBER	DESCRIPTION	SET POINT	B8:010/ 17	16	15	14	13	12	11	10	07	06	05	04	03	02	01	00	B8:011/ 17	16	15	14	13	12	11	10	07	06	05	04	03	02	01	00	PREALARM	REMARKS	ALARM BIT B001:XX/XX	MASK WORD B8:XX
1	16 AAH 059	AB EXHAUST CO	90 ppm																																	X	ROHA prealarm. Corrected to 7% O2 dry basis. See NOTE 2.	TBD	NA
2	16 AAHH 059	AB EXHAUST CO	160 ppm		X																																Instantaneous alarm. Corrected to 7% O2 dry basis. See NOTE 2.	TBD	TBD
3	16 AAHH 059	AB EXHAUST CO	100 ppm		X																																RCRA AWFCO DFS 16. ROHA. Corrected to 7% O2. dry basis. See NOTEs 2 & 3.	1050/00	166
4	16/24 HS 059A/207A	BOTH DFS PAS CO ANALYZERS IN CAL	In Calib		X																																See NOTE 2.	1222/14	252
5	16 XS 059	AB EXHAUST CO	MALF	X	X																																Stop feed on malf. alarm only if 24-AIT-207 is also in malf. or is in "calibrate" mode. Alarm active only when combined fuel flow to kiln and afterburner > 100 scfm. See NOTE 2.	1021/02 1223/02	218
6	16 AAH 175	AB EXHAUST O2	14% O2																																	X	ROHA prealarm. Corrected to dry basis. See NOTE 2.	TBD	NA
7	16 AAH 175	AB EXHAUST O2	20% O2		X																																Instantaneous alarm. Corrected to dry basis. See NOTE 2.	TBD	TBD
8	16 AAHH 175	AB EXHAUST O2	15% O2		X																																RCRA AWFCO DFS 29 . ROHA. Corrected to dry basis. See NOTEs 2 & 3 (listed inpermit as 24-ASL-175).	1250/16	248
9	16 AAL 175	AB EXHAUST O2	4% O2																																	X	ROHA prealarm. Corrected to dry basis. See NOTE 2.	TBD	NA
10	16 AAL 175	AB EXHAUST O2	2% O2		X																																Instantaneous alarm. Corrected to dry basis. See NOTE 2.	TBD	TBD
11	16 AALL 175	AB EXHAUST O2	3% O2		X																																RCRA AWFCO DFS 30. ROHA. Corrected to dry basis. See NOTEs 2 & 3 (permit SP is 8.8%).	1021/04	174
12	16/24 HS 175A/206A	BOTH DFS PAS O2 ANALYZERS IN CAL	In Calib		X																																See NOTE 2.	1222/16	254
13	16 XS 175	AB EXHAUST O2	MALF	X	X																																Stop feed on malf. alarm only if 24-AIT-206 is also in malf. or in "calibrate" mode.See NOTE 2.	1021/06 1223/00	162
14	16 XS 781	AFTERBURNER CHAMBER CO2	MALF	X	X																																TSCA. Alarm from TOCDF. RFI S-ALL-249 says no alarms are associated with CO2 analyzers.	1022/12	222
15	16 XS 781B	AFTERBURNER CHAMBER CO2	MALF	X	X																																TSCA. Alarm from TOCDF and is not shown on P&ID. RFI S-ALL-249 says no alarms are associated with CO2 analyzers.	1022/14	222

PBCDF DEACTIVATION FURNACE SYSTEM (DFS) POLLUTION ABATEMENT SYSTEM (PAS) AND PAS FILTER SYSTEM (PFS)

PBCDF DFS PAS/PFS

ALARM AND INTERLOCK MATRIX

PBCDF DFS PAS/PFS

P&IDs: PB-6-D-506,-507, -508, -509, -523, -524,-527, -530, and -531, PB-6-H-504
PLC: ICS-CONR-112; INTERLOCK: I-10

F00 - SPARE
F01 - CLOSE ISOLATION VALVES
F02 - SHUTDOWN KILN LUBE OIL
F03 - SHUTDOWN HEATED DISCHARGE CONVEYOR
F04 - SHUTDOWN HEATED DISCHARGE CONVEYOR HEATERS
F05 - SHUTDOWN KILN DRIVE
F06 - OSCILLATE KILN DRIVE
F07 - SHUTDOWN AFTERBURNER COMBUSTION AIR BLOWER
F10 - SHUTDOWN AFTERBURNER #2
F11 - SHUTDOWN AFTERBURNER #1
F12 - SHUTDOWN KILN COMBUSTION AIR BLOWER
F13 - SHUTDOWN KILN BURNER
F14 - CLOSE KILN SHROUD DAMPERS
F15 - OPEN KILN SHROUD DAMPERS
F16 - SPARE
F17 - STOP FEED
MALFUNCTION

P17 - S/D PFS-COOL-115A FAN B (NOTE 1)
P16 - S/D PFS-COOL-115A FAN A (NOTE 1)
P15 - SD PFS-COOL-115B FAN B (NOTE 1)
P14 - S/D PFS-COOL-115B FAN A (NOTE 1)
P13 - S/D MIST ELIM WATER RETURN PUMP
P12 - SWITCHOVER BRINE PUMP TO BACKUP (NOTE 1)
P11 - SWITCHOVER CL LIQ PUMP TO BACKUP (NOTE 1)
P10 - BYPASS CARBON FILTER (NOTE 1)
P07 - S/D BRINE PUMPS
P06 - S/D CLEAN LIQUOR PUMPS
P05 - S/D PFS-COOL-115C FAN B (NOTE 1)
P04 - S/D PFS-COOL-115C FAN A (NOTE 1)
P03 - S/D PFS-COOL-115D FAN B (NOTE 1)
P02 - S/D PFS-COOL-115D FAN A (NOTE 1)
P01 - S/D IST STAGE ID FAN
P00 - S/D 2ND STAGE ID FAN
PREALARM

ITEM NUM	TAG NUMBER			DESCRIPTION	SET POINT	B8:010/ 17	16	15	14	13	12	11	10	07	06	05	04	03	02	01	00	B8:011/ 17	16	15	14	13	12	11	10	07	06	05	04	03	02	01	00		REMARKS	ALARM BIT B001:XX/XX	MASK WORD B8:XX
16	16	HS	781A/B	ANALYZER CO2	In Calib	X																																	Alarm when both 16-HS-781A and -781B are in calibrate. Alarm from TOCDF. RFI S-ALL-249 says no alarms are associated with CO2 analyzers.	1222/12	250
17	16	AAL	781H	CO2 COMB EFFICIENCY	99.90%	X																																	TSCA. 3 min delay. Alarm on combustion efficiency less than 99.9% continuously for 3 minutes. Alarm from TOCDF and is not shown on P&ID. RFI S-ALL-249 says no alarms are associated with CO2 analyzers.	1052/00	220
18	16	AAL	781I	CO2 COMB EFFICIENCY	99.90%																																	X	Instantaneous alarm. Alarm from TOCDF and is not shown on P&ID. RFI S-ALL-249 says no alarms are associated with CO2 analyzers.	1052/04	NA
19	24	TSHH	001	QUENCH TOWER-103 OVERHEAD	215 F	X																																	Open emergency quench spray (see FAWB Note B-7). SP per PBAC0788ICS R1 & PBAP981INS.	1420/00	112
20	24	FAL	002	BRINE TO QUENCH TWR	200 gpm	X																																	5 sec delay.	1450/00	114
21	24	PDAH	003	SCRUBBER MIST ELIMINATOR	2 in wc																																	X		1651/06	NA
22	24	FAL	006	VENTURI BRINE FEED	310 gpm																																	X	5 sec delay. Prealarm and SP per RFI C-ANCDF-003R1.	TBD	NA
23	24	FALL	006	VENTURI BRINE FEED	300 gpm	X																																	RCRA AWFCO DFS 26; 30 sec delay. Alarm & SP per RFI C-ANCDF-003R1. Permit lists alarm as FAL-006. Alarm not shown on PB-6-D-506.	1850/02	180
24	24	AAH	007	QUENCH BRINE pH	9.5 pH																																	X		1850/12	NA
25	24	AAL	007	QUENCH BRINE pH	7.5 pH																																	X		1851/06	NA
26	24	AALL	007	QUENCH BRINE pH	7.0 pH	X																																	Alarm is at TOCDF and is in Jan 2000 ANCDF code, but is not shown on PB-6-D-506.	1850/10	212
27	24	PDAH	008	VENTURI SCRUBBER DELTA P	SP+10 in wc																																	X	SP=setpoint entered in controller by operator	1850/06	NA
28	24	PDAL	008	VENTURI SCRUBBER DELTA P	25 in wc																																	X		1850/04	NA
29	24	PDALL	008	VENTURI SCRUBBER DELTA P	20 in wc	X																																	RCRA AWFCO DFS 15. See NOTE 3.	1851/00	116
30	24	LAH	009	DFS QUENCH TOWER	2.0 in																																	X	10 sec delay. SP from P&ID.	1450/04	NA
31	24	LAHH	009	DFS QUENCH TOWER	8.0 in	X			X	X	X	X	X	X		X	X																						SP from P&ID. Shuts off brine spray to quench tower and PRW makeup to quench brine. Input to PAS NORMAL relay.	1450/02	118
32	24	LAH	010	SCRUBBER BOTTOM SUMP	63 in																																	X	Prealarm per ANCDF Oct 2000 PAS/PFS mtg.	1650/16	122
33	24	LAL	010	SCRUBBER BOTTOM SUMP	39 in																																	X	Prealarm per ANCDF Oct 2000 PAS/PFS mtg.	1650/14	120

PBCDF DEACTIVATION FURNACE SYSTEM (DFS) POLLUTION ABATEMENT SYSTEM (PAS) AND PAS FILTER SYSTEM (PFS)

PBCDF DFS PAS/PFS

ALARM AND INTERLOCK MATRIX

PBCDF DFS PAS/PFS

P&IDs: PB-6-D-506,-507, -508, -509, -523, -524,-527, -530, and -531, PB-6-H-504
PLC: ICS-CONR-112; INTERLOCK: I-10

B8:010/

Bit	Description
17	F00 - SPARE
16	F01 - CLOSE ISOLATION VALVES
15	F02 - SHUTDOWN KILN LUBE OIL
14	F03 - SHUTDOWN HEATED DISCHARGE CONVEYOR
13	F04 - SHUTDOWN HEATED DISCHARGE CONVEYOR HEATERS
12	F05 - SHUTDOWN KILN DRIVE
11	F06 - OSCILLATE KILN DRIVE
10	F07 - SHUTDOWN AFTERBURNER COMBUSTION AIR BLOWER
07	F10 - SHUTDOWN AFTERBURNER #2
06	F11 - SHUTDOWN AFTERBURNER #1
05	F12 - SHUTDOWN KILN COMBUSTION AIR BLOWER
04	F13 - SHUTDOWN KILN BURNER
03	F14 - CLOSE KILN SHROUD DAMPERS
02	F15 - OPEN KILN SHROUD DAMPERS
01	F16 - SPARE
00	F17 - STOP FEED

B8:011/

Bit	Description
17	P17 - S/D PFS-COOL-115A FAN B (NOTE 1)
16	P16 - S/D PFS-COOL-115A FAN A (NOTE 1)
15	P15 - SD PFS-COOL-115B FAN B (NOTE 1)
14	P14 - S/D PFS-COOL-115B FAN A (NOTE 1)
13	P13 - S/D MIST ELIM WATER RETURN PUMP
12	P12 - SWITCHOVER BRINE PUMP TO BACKUP (NOTE 1)
11	P11 - SWITCHOVER CL LIQ PUMP TO BACKUP (NOTE 1)
10	P10 - BYPASS CARBON FILTER (NOTE 1)
07	P07 - S/D BRINE PUMPS
06	P06 - S/D CLEAN LIQUOR PUMPS
05	P05 - S/D PFS-COOL-115C FAN B (NOTE 1)
04	P04 - S/D PFS-COOL-115C FAN A (NOTE 1)
03	P03 - S/D PFS-COOL-115D FAN B (NOTE 1)
02	P02 - S/D PFS-COOL-115D FAN A (NOTE 1)
01	P01 - S/D IST STAGE ID FAN
00	P00 - S/D 2ND STAGE ID FAN

MALFUNCTION / PREALARM

ITEM NUM	TAG NUMBER	DESCRIPTION	SET POINT	B8:010/ 17	16	15	14	13	12	11	10	07	06	05	04	03	02	01	00	B8:011/ 17	16	15	14	13	12	11	10	07	06	05	04	03	02	01	00		REMARKS	ALARM BIT B001:XX/XX	MASK WORD B8:XX
34	24 LSHH 010	SCRUBBER BOTTOM SUMP	69 in	X																																	3 sec delay. Open 24-DV-33 (Deenergize 24-LY-33). Stop feed per RFI C-ANCDF-004.	1621/02	NA
35	24 LSLL 010	SCRUBBER BOTTOM SUMP	33 in	X																																	3 sec delay. Close 24-DV-33 (24-LY-33 energized and drive 24-DY-33 to close). Stop feed per RFI C-ANCDF-004.	1621/04	NA
36	24 PAL 011	QUENCH BRINE DICHARGE	80 psig																					X													SP per DSIC. Switchover to secondary pump on low pressure alarm when primary is running.	1850/00	NA
37	24 PALL 011	QUENCH BRINE DICHARGE	40 psig	X																																	24-PALL-011 not shown on PB-6-D-506.	1851/12	256
38	24 XA 013	BRINE PUMP 106	MALF	X																				X													Switchover to secondary pump on malf. alarm when PAS-PUMP-106 is selected as primary.	1860/11	NA
39	24 FISL 017	BRINE PUMP 106 SEAL WATER	0.15 gpm																																		5 sec delay. S/D PAS-PUMP-106 if selected as primary, which will cause 24-XA-013 to alarm. SP from instrument data sheet.	1820/00	NA
40	24 XA 019	BRINE PUMP 107	MALF	X																				X													Switchover to secondary pump on malf. alarm when PAS-PUMP-107 is selected as primary.	1862/11	NA
41	24 FISL 023	BRINE PUMP 107 SEAL WATER	0.15 gpm																																		5 sec delay. S/D PAS-PUMP-107 if selected as primary, which will cause 24-XA-019 to alarm. SP from instrument data sheet.	1820/02	NA
42	24 LSLLL 024	SCRUBBER BOTTOM SUMP	27 in	X			X	X	X	X	X	X		X	X													X									RCRA AWFCO DFS 33. 3 sec delay. Listed in permit as LALL-24. SP from P&ID. Permit SP is 24 in. (see NOTE 3). Input to PAS NORMAL relay (see FAWB Note B-19).	1620/00	120
43	24 PDAH 025	SCRUBBER-102 PACKED BED D.P.	6 in wc																										X									1651/10	TBD
44	24 FAL 030	SCRUBBER-102 CLEAN LIQ FLOW	SP-10%																																	X	45 sec delay after pump startup. 5 sec delay for alarm. Design flow is 2087 gpm.	1650/10	NA
45	24 FALL 030	SCRUBBER-102 CLEAN LIQ FLOW	600 gpm	X																																	RCRA AWFCO DFS 18. See NOTE 3.	1650/06	182
46	24 LAL 031	SCRUBBER-102 CLEAN LIQUOR SUMP	24 in																																	X	SP from P&ID (14 ft 0 in. minus 12 ft 0 in. offset). SP is 30 in. above bottom of chimney tray well point. Alarm response per Oct 2000 ANCDF PAS/PFS mtg.	1650/12	140
47	24 LSHHH 032	SCRUBBER 102 SUMP	75 in	X			X	X	X	X	X	X		X	X								X														RCRA AWFCO DFS 32. 3 sec delay. Listed in permit as LAHH-032. SP from P&ID . Permit SP is 84 in (see NOTE 3). Input to PAS NORMAL relay (see FAWB Note B-19). See NOTE 4 for additional interlocks.	1620/02	122
48	24 DAH 033	PUMP-106/107 BRINE DENSITY	1.20 sg																																	X	Setpoint from RFI S-ALL-0232	1850/16	NA

PBCDF DEACTIVATION FURNACE SYSTEM (DFS) POLLUTION ABATEMENT SYSTEM (PAS) AND PAS FILTER SYSTEM (PFS)

PBCDF DFS PAS/PFS

ALARM AND INTERLOCK MATRIX

PBCDF DFS PAS/PFS

P&IDs: PB-6-D-506,-507, -508, -509, -523, -524,-527, -530, and -531, PB-6-H-504
PLC: ICS-CONR-112; INTERLOCK: I-10

F00 - SPARE
F01 - CLOSE ISOLATION VALVES
F02 - SHUTDOWN KILN LUBE OIL
F03 - SHUTDOWN HEATED DISCHARGE CONVEYOR
F04 - SHUTDOWN HEATED DISCHARGE CONVEYOR HEATERS
F05 - SHUTDOWN KILN DRIVE
F06 - OSCILLATE KILN DRIVE
F07 - SHUTDOWN AFTERBURNER COMBUSTION AIR BLOWER
F10 - SHUTDOWN AFTERBURNER #2
F11 - SHUTDOWN AFTERBURNER #1
F12 - SHUTDOWN KILN COMBUSTION AIR BLOWER
F13 - SHUTDOWN KILN BURNER
F14 - CLOSE KILN SHROUD DAMPERS
F15 - OPEN KILN SHROUD DAMPERS
F16 - SPARE
F17 - STOP FEED
MALFUNCTION

P17 - S/D PFS-COOL-115A FAN B (NOTE 1)
P16 - S/D PFS-COOL-115A FAN A (NOTE 1)
P15 - SD PFS-COOL-115B FAN B (NOTE 1)
P14 - S/D PFS-COOL-115B FAN A (NOTE 1)
P13 - S/D MIST ELIM WATER RETURN PUMP
P12 - SWITCHOVER BRINE PUMP TO BACKUP (NOTE 1)
P11 - SWITCHOVER CL LIQ PUMP TO BACKUP (NOTE 1)
P10 - BYPASS CARBON FILTER (NOTE 1)
P07 - S/D BRINE PUMPS
P06 - S/D CLEAN LIQUOR PUMPS
P05 - S/D PFS-COOL-115C FAN B (NOTE 1)
P04 - S/D PFS-COOL-115C FAN A (NOTE 1)
P03 - S/D PFS-COOL-115D FAN B (NOTE 1)
P02 - S/D PFS-COOL-115D FAN A (NOTE 1)
P01 - S/D IST STAGE ID FAN
P00 - S/D 2ND STAGE ID FAN
PREALARM

ITEM NUM	TAG NUMBER	DESCRIPTION	SET POINT	B8:010/ 17	16	15	14	13	12	11	10	07	06	05	04	03	02	01	00	B8:011/ 17	16	15	14	13	12	11	10	07	06	05	04	03	02	01	00		REMARKS	ALARM BIT B001:XX/XX	MASK WORD B8:XX
49	24 DAHH 033	PUMP-106/107 BRINE DENSITY	1.25 sg	X																																	Setpoint from RFI S-ALL-0232	1851/02	184
50	24 AAH 034	CLEAN LIQUOR pH	9.5 pH																																	X	45 sec delay after pump startup.	1651/02	126
51	24 AAL 034	CLEAN LIQUOR pH	7.5 pH	X																																	RCRA AWFCO DFS 23. See NOTE 3. 45 sec delay after pump startup. Note: AN & UM have a prealarm and the RCRA AWFCO is AALL-034. See FAWB Note B-16.	1651/00	124
52	24 DAH 035	CLEAN LIQUOR DENSITY	TBD																																	X	Setpoint to be determined.	1651/04	NA
53	24 DAHH 035	CLEAN LIQUOR DENSITY	1.28 sg	X																																	RCRA AWFCO DFS 27. See NOTE 3.	1651/12	NA
54	24 PDAH 051	QUENCH TOWR 103 BRINE FILTER	10.0 psid																																	X		1450/06	NA
55	24 XA 064	1st & 2nd STAGE ID FAN	NOT RUNNING	X					X			X																										1261/13 1263/13	226
56	24 XA 065	2nd STAGE ID FAN	MALF	X X																															X		Start I-lock for 2nd stage motor.	1263/11	264
57	24 XA 066	2nd STAGE ID FAN TROUBLE	Trouble	X																															X		Alarm response per RFI C-ANCDF-002. Trouble alarm initiated by ASD motor thermal overload which stops the motor.	1224/00	TBD
58	24 SAH 066A	2nd STAGE ID FAN SPEED	1800 rpm	X																															X		SP per RFI S-ALL-232.	1253/02	TBD
59	24 AAH 075	SOX EMISSION	14.2 lb/hr																																	X	Alarm will be generated in PLC based on analog input rather than using digital input as shown on PB-6-D-507 (Ref: RFI S-ALL-249). Also alarm on 41.8 tons/yr - totalized. See NOTE 2.	TBD	NA
60	24 AAH 076	NOX EMISSION	88 lb/hr																																	X	Alarm will be generated in PLC based on analog input rather than using digital input as shown on PB-6-D-507 (Ref: RFI S-ALL-249). Also alarm on 92.3 tons/yr - totalized. See NOTE 2.	1222/06	NA
61	24 TSH 077A-F	2ND STAGE ID FAN WINDING TEMP	320°F	X																																	SP from vendor info. Alarm on high temp for any of 24-TSH-077A through F. Stop feed per PB-6-D-507 Note 17.	1220/00	128
62	24 TSHH 077A-F	2ND STAGE ID FAN WINDING TEMP	329°F																																X		SP from vendor info. Alarm on high-high temp for any of 24-TSHH-077A thru F. PB-6-D-507 Note 19 specifies S/D 2nd stage, except when running in emergency mode.	1223/06	TBD
63	24 XAH 080	2nd STAGE ID FAN VIBRATION	0.25 in/sec	X																																	3 sec delay. See NOTE 6.	1252/02	TBD
64	24 XSHH 080	2nd STAGE ID FAN VIBRATION	0.5 in/sec																																X		3 sec delay. S/D 2nd stage, except when running in emergency mode. See NOTE 6.	1220/06	130
65	24 FAH 191	PAS-SCRB-102 CAUSTIC ADDITION	0.6 gpm																																X		SP per RFI S-ALL-232. Note: AN modified SP.	1652/10	NA

PBCDF DEACTIVATION FURNACE SYSTEM (DFS) POLLUTION ABATEMENT SYSTEM (PAS) AND PAS FILTER SYSTEM (PFS)

PBCDF DFS PAS/PFS

ALARM AND INTERLOCK MATRIX

P&IDs: PB-6-D-506,-507, -508, -509, -523, -524,-527, -530, and -531, PB-6-H-504
PLC: ICS-CONR-112; INTERLOCK: I-10

PBCDF DFS PAS/PFS

B8:010/

17	16	15	14	13	12	11	10	07	06	05	04	03	02	01	00
F00 - SPARE	F01 - CLOSE ISOLATION VALVES	F02 - SHUTDOWN KILN LUBE OIL	F03 - SHUTDOWN HEATED DISCHARGE CONVEYOR	F04 - SHUTDOWN HEATED DISCHARGE CONVEYOR HEATERS	F05 - SHUTDOWN KILN DRIVE	F06 - OSCILLATE KILN DRIVE	F07 - SHUTDOWN AFTERBURNER COMBUSTION AIR BLOWER	F10 - SHUTDOWN AFTERBURNER #2	F11 - SHUTDOWN AFTERBURNER #1	F12 - SHUTDOWN KILN COMBUSTION AIR BLOWER	F13 - SHUTDOWN KILN BURNER	F14 - CLOSE KILN SHROUD DAMPERS	F15 - OPEN KILN SHROUD DAMPERS	F16 - SPARE	F17 - STOP FEED

B8:011/

17	16	15	14	13	12	11	10	07	06	05	04	03	02	01	00
P17 - S/D PFS-COOL-115A FAN B (NOTE 1)	P16 - S/D PFS-COOL-115A FAN A (NOTE 1)	P15 - SD PFS-COOL-115B FAN B (NOTE 1)	P14 - S/D PFS-COOL-115B FAN A (NOTE 1)	P13 - S/D MIST ELIM WATER RETURN PUMP	P12 - SWITCHOVER BRINE PUMP TO BACKUP (NOTE 1)	P11 - SWITCHOVER CL LIQ PUMP TO BACKUP (NOTE 1)	P10 - BYPASS CARBON FILTER (NOTE 1)	P07 - S/D BRINE PUMPS	P06 - S/D CLEAN LIQUOR PUMPS	P05 - S/D PFS-COOL-115C FAN B (NOTE 1)	P04 - S/D PFS-COOL-115C FAN A (NOTE 1)	P03 - S/D PFS-COOL-115D FAN B (NOTE 1)	P02 - S/D PFS-COOL-115D FAN A (NOTE 1)	P01 - S/D IST STAGE ID FAN	P00 - S/D 2ND STAGE ID FAN

MALFUNCTION — PREALARM

ITEM NUM	TAG NUMBER	DESCRIPTION	SET POINT	17	16	15	14	13	12	11	10	07	06	05	04	03	02	01	00	17	16	15	14	13	12	11	10	07	06	05	04	03	02	01	00		REMARKS	ALARM BIT B001:XX/XX	MASK WORD B8:XX
66	24 FAL 191	PAS-SCRB-102 CAUSTIC ADDITION	0.1 gpm																																	X	SP per RFI S-ALL-232. Note: AN modified SP.	1652/06	NA
67	24 AAH 206	DFS FLUE GAS STACK O2	20% O2		X																																Instantaneous alarm. Corrected to dry basis. See NOTE 2.	1251/14	NA
68	24 XS 206	DFS FLUE GAS STACK O2	MALF	X	X																																Stop feed on malf. alarm only if 16-AIT-175 is also in malf. or in "calibrate" mode. See NOTE 2.	1220/12 1223/00	162
69	24 AAH 207	DFS FLUE GAS STACK CO	160 ppm		X																																Instantaneous alarm. Corrected to 7% O2 dry basis. See NOTE 2.	1250/06	136
70	24 AAH 207	DFS FLUE GAS STACK CO	90 ppm		X																																ROHA alarm. Corrected to 7% O2 dry basis. See NOTE 2.	TBD	TBD
71	24 XS 207	DFS FLUE GAS STACK CO	MALF	X	X																																Stop feed on malf. alarm only if 16-AIT-059 is also in malf. or is in "calibrate" mode. Alarm active only when combined fuel flow to kiln and afterburner > 100 scfm. See NOTE 2.	1220/04 1223/02	136
72	24 TAH 274	CLEAN LIQUOR TO SCRUBBER	128°F																																	X	SP per RFI S-ALL-232.	1652/02	NA
73	24 TAHH 274	CLEAN LIQUOR TO SCRUBBER	143°F		X																																SP & response per RFI S-ALL-232.	1652/00	NA
74	24 TAL 274	CLEAN LIQUOR TO SCRUBBER	100°F																																	X	SP per RFI S-ALL-232.	1652/04	NA
75	24 PDAH 312	MIST ELIM. CANDLES DIFF P	15 in wc																																	X		0650/04	NA
76	24 PDAHH 312	MIST ELIM. CANDLES DIFF P	20 in wc		X																																	0650/06	192
77	24 LSHH 313	MIST ELIM. CANDLES SUMP	66 in																																		Alarm to be deleted by PBAC1090INS.	0620/02	NA
78	24 LAH 314	PAS MIST ELIM. SUMP	16 in																																		SP from PB-6-D-508. Start PAS-PUMP-138 (see FAWB Note B-17).	0650/02	NA
79	24 LAHH 314	PAS MIST ELIM. SUMP	18 in																																		SP from PB-6-D-508. Input to PAS NORMAL relay (ref: PBAC1090INS).	0650/10	NA
80	24 LAL 314	PAS MIST ELIM. SUMP	10 in																																	X	SP from PB-6-D-508.	0650/00	NA
81	24 LSLL 315	PAS MIST ELIM. SUMP	8 in																				X														3 sec delay. SP from PB-6-D-508. Alarm active when 24-HS-314 selected to DFS mist eliminator. Hardwired S/D of pump needs to be disabled when 24-HS-314 is aligned to the spare. (NOTE 24-HS-314 is not shown on P&ID).	0620/00	276
82	24 XA 322	BRINE/CLEAN LIQ. DENSITY	MALF	X																																	Alarm for MALF signal from 24-XS-033 or 24-XS-035.	TBD	NA
83	24 LSHH 347	PAS AREA SUMP PUMP-110	106 in																																		3 sec delay; DICO to ICS-CONR-111 to S/D feeding sump pumps. SP from instrument data sheet.	0620/04	NA

PBCDF DEACTIVATION FURNACE SYSTEM (DFS) POLLUTION ABATEMENT SYSTEM (PAS) AND PAS FILTER SYSTEM (PFS)

PBCDF DFS PAS/PFS

ALARM AND INTERLOCK MATRIX

P&IDs: PB-6-D-506,-507, -508, -509, -523, -524,-527, -530, and -531, PB-6-H-504
PLC: ICS-CONR-112; INTERLOCK: I-10

PBCDF DFS PAS/PFS

F00 - SPARE
F01 - CLOSE ISOLATION VALVES
F02 - SHUTDOWN KILN LUBE OIL
F03 - SHUTDOWN HEATED DISCHARGE CONVEYOR
F04 - SHUTDOWN HEATED DISCHARGE CONVEYOR HEATERS
F05 - SHUTDOWN KILN DRIVE
F06 - OSCILLATE KILN DRIVE
F07 - SHUTDOWN AFTERBURNER COMBUSTION AIR BLOWER
F10 - SHUTDOWN AFTERBURNER #2
F11 - SHUTDOWN AFTERBURNER #1
F12 - SHUTDOWN KILN COMBUSTION AIR BLOWER
F13 - SHUTDOWN KILN BURNER
F14 - CLOSE KILN SHROUD DAMPERS
F15 - OPEN KILN SHROUD DAMPERS
F16 - SPARE
F17 - STOP FEED
MALFUNCTION

P17 - S/D PFS-COOL-115A FAN B (NOTE 1)
P16 - S/D PFS-COOL-115A FAN A (NOTE 1)
P15 - SD PFS-COOL-115B FAN B (NOTE 1)
P14 - S/D PFS-COOL-115B FAN A (NOTE 1)
P13 - S/D MIST ELIM WATER RETURN PUMP
P12 - SWITCHOVER BRINE PUMP TO BACKUP (NOTE 1)
P11 - SWITCHOVER CL LIQ PUMP TO BACKUP (NOTE 1)
P10 - BYPASS CARBON FILTER (NOTE 1)
P07 - S/D BRINE PUMPS
P06 - S/D CLEAN LIQUOR PUMPS
P05 - S/D PFS-COOL-115C FAN B (NOTE 1)
P04 - S/D PFS-COOL-115C FAN A (NOTE 1)
P03 - S/D PFS-COOL-115D FAN B (NOTE 1)
P02 - S/D PFS-COOL-115D FAN A (NOTE 1)
P01 - S/D IST STAGE ID FAN
P00 - S/D 2ND STAGE ID FAN
PREALARM

ITEM NUM	TAG NUMBER	DESCRIPTION	SET POINT	B8:010/ 17	16	15	14	13	12	11	10	07	06	05	04	03	02	01	00	B8:011/ 17	16	15	14	13	12	11	10	07	06	05	04	03	02	01	00	PREALARM	REMARKS	ALARM BIT B001:XX/XX	MASK WORD B8:XX
84	24 FSL 373	QUENCH EMERGENCY WATER	10 gpm																																		3 sec delay. SP from instrument data sheet. Active only when 24-TV-001 is open.	1420/02	NA
85	24 TAH 374	QUENCH TOWER OVERHEAD	200°F																																	X	SP from PBAP981INS (see FAWB Note B-7)	1450/10	NA
86	24 TSHHH 375	QUENCH TOWER OVERHEAD	250°F	X			X	X	X	X		X		X	X																						RCRA AWFCO DFS 25. SP from RCRA permit, PBAC788ICS R1 & PBAP981INS. Input to PAS NORMAL relay. See FAWB Note B-7.	1420/10	138
87	24 FSL 376	SCRUBBER-102 PROCESS WTR	20 gpm																																		3 sec delay. SP from instrument data sheet. Active only when 24-XV-026 is energized.	1620/10	NA
88	24 LSLL 381	SCRUBBER 102 CLEAN LIQUOR SUMP	3 in	X																									X								3-sec delay. SP from PB-6-D-506 (14 ft 0 in. minus 12 ft 0 in. offset). SP is 9 in. above bottom of chimney tray well point. Alarm response per Oct 2000 ANCDF PAS/PFS mtg.	1620/12	140
89	24 IAH 387	2nd STAGE ID FAN OVER CURRENT	602 amp	X																															X		2-min delay on startup. SP per RFI S-ALL-232.	1250/02	146
90	24 FSL 430	SCRB-102 MIN FLOW FOR PURGE	7500 scfm																																	X	Min flow for purge; 3 sec delay. SP from instrument data sheet.	1620/14	NA
91	24 FSLL 430	SCRB-102 EXHAUST GAS	2200 scfm	X				X		X	X																										SP from instrument data sheet. BMS 3-P running interlock.	1620/16	148
92	24 TSH 448A/B	1st STAGE ID FAN BEARING TEMP	160°F	X																																	3 sec delay. SP from vendor info. PB-6-D-507 Note 17 specifies stop feed.	1221/10	194
93	24 TSHH 448A/B	1st STAGE ID FAN BEARING TEMP	200°F																														X				3 sec delay. SP from vendor info. PB-6-D-507 Note 19 specifies S/D 1st stage, except when running in emergency mode.	1223/10	TBD
94	24 TSH 449A/B	2nd STAGE ID FAN BEARING TEMP	160°F	X																																	3 sec delay. SP from vendor info. PB-6-D-507 Note 17 specifies stop feed.	1221/12	196
95	24 TSHH 449A/B	2nd STAGE ID FAN BEARING TEMP	200°F																																X		3 sec delay. SP from vendor info. PB-6-D-507 Note 19 specifies S/D 2nd stage, except when running in emergency mode.	1223/12	TBD
96	24 PDAH 655	CLEAN LIQ STRAINER FILTER	10.0 psid																																	X		1650/02	NA
97	24 FISL 755	MIST ELIM RET PUMP SEAL WATER	0.15 gpm																				X														5 sec delay. SP from instrument data sheet.	0620/12	NA
98	24 XA 773	1st STAGE ID FAN TROUBLE	Trouble	X																													X				Alarm response per RFI C-ANCDF-002. Trouble alarm initiated by ASD motor thermal overload which stops the motor.	1223/16	TBD
99	24 SAH 773A	1st STAGE ID FAN SPEED	1800 rpm	X																													X				SP per RFI S-ALL-232.	1253/00	TBD
100	24 PSH 959	ID FAN SUCTION PRESS	- 5 in wc																																	X	3 sec delay. SP from instrument data sheet.	1220/14	NA

PBCDF DEACTIVATION FURNACE SYSTEM (DFS) POLLUTION ABATEMENT SYSTEM (PAS) AND PAS FILTER SYSTEM (PFS)

PBCDF DFS PAS/PFS

ALARM AND INTERLOCK MATRIX

PBCDF DFS PAS/PFS

P&IDs: PB-6-D-506,-507, -508, -509, -523, -524,-527, -530, and -531, PB-6-H-504
PLC: ICS-CONR-112; INTERLOCK: I-10

F00 - SPARE
F01 - CLOSE ISOLATION VALVES
F02 - SHUTDOWN KILN LUBE OIL
F03 - SHUTDOWN HEATED DISCHARGE CONVEYOR
F04 - SHUTDOWN HEATED DISCHARGE CONVEYOR HEATERS
F05 - SHUTDOWN KILN DRIVE
F06 - OSCILLATE KILN DRIVE
F07 - SHUTDOWN AFTERBURNER COMBUSTION AIR BLOWER
F10 - SHUTDOWN AFTERBURNER #2
F11 - SHUTDOWN AFTERBURNER #1
F12 - SHUTDOWN KILN COMBUSTION AIR BLOWER
F13 - SHUTDOWN KILN BURNER
F14 - CLOSE KILN SHROUD DAMPERS
F15 - OPEN KILN SHROUD DAMPERS
F16 - SPARE
F17 - STOP FEED
MALFUNCTION

P17 - S/D PFS-COOL-115A FAN B (NOTE 1)
P16 - S/D PFS-COOL-115A FAN A (NOTE 1)
P15 - SD PFS-COOL-115B FAN B (NOTE 1)
P14 - S/D PFS-COOL-115B FAN A (NOTE 1)
P13 - S/D MIST ELIM WATER RETURN PUMP
P12 - SWITCHOVER BRINE PUMP TO BACKUP (NOTE 1)
P11 - SWITCHOVER CL LIQ PUMP TO BACKUP (NOTE 1)
P10 - BYPASS CARBON FILTER (NOTE 1)
P07 - S/D BRINE PUMPS
P06 - S/D CLEAN LIQUOR PUMPS
P05 - S/D PFS-COOL-115C FAN B (NOTE 1)
P04 - S/D PFS-COOL-115C FAN A (NOTE 1)
P03 - S/D PFS-COOL-115D FAN B (NOTE 1)
P02 - S/D PFS-COOL-115D FAN A (NOTE 1)
P01 - S/D IST STAGE ID FAN
P00 - S/D 2ND STAGE ID FAN
PREALARM

ITEM NUM	TAG NUMBER			DESCRIPTION	SET POINT	B8:010/ 17	16	15	14	13	12	11	10	07	06	05	04	03	02	01	00	B8:011/ 17	16	15	14	13	12	11	10	07	06	05	04	03	02	01	00		REMARKS	ALARM BIT B001:XX/XX	MASK WORD B8:XX
101	24	TSH	966A-F	1st STAGE ID FAN WINDING TEMP	320°F		X																																SP from vendor info. Alarm on high temp for any of 24-TSH-077A through F. Stop feed per PB-6-D-507 Note 17.	1252/12	152
102	24	TSHH	966A-F	1st STAGE ID FAN WINDING TEMP	329°F																															X			SP from vendor info. Alarm on high-high temp for any of 24-TSHH-077A thru F. PB-6-D-507 Note 19 specifies S/D 1st stage, except when running in emergency mode.	1221/16	TBD
103	24	IAH	967	1st STAGE ID FAN HIGH CURRENT	602 amp		X																													X			2-min delay on startup. SP per RFI S-ALL-232.	1250/04	154
104	24	XAH	968	1st STAGE ID FAN VIBRATION	0.25 in/sec		X																																3 sec delay. See NOTE 6.	1252/14	TBD
105	24	XSHH	968	1st STAGE ID FAN VIBRATION	0.5 in/sec																															X			3 sec delay.S/D 1st stage, except when running in emergency mode. See NOTE 6.	1222/00	156
106	24	XA	970	1st STAGE ID FAN	MALF	X	X																													X			Start I-lock for 1st stage motor.	1261/11	198
107	114	PDAH	080	PFS-COOL-115D CLEAN LIQ COOLER	20 psid																																	X	SP per RFI S-ALL-232.	3050/06	NA
108	114	PDAL	080	PFS-COOL-115D CLEAN LIQ COOLER	8 psid																																	X	SP per RFI S-ALL-232.	3051/06	NA
109	114	TAH	155	PFS-COOL-115D CLEAN LIQ COOLER	135°F																																	X	SP per RFI S-ALL-232.	3050/02	NA
110	114	TAL	155	PFS-COOL-115D CLEAN LIQ COOLER	100°F																													X	X				SP per RFI S-ALL-232. Instant alarm, 120-sec delay for cooler S/D (see FAWB Note B-20).	3051/02	NA
111	114	XSH	156	PFS-COOL-115D FAN B VIBRATION	See NOTE 7																																	X	5 sec delay (vendor info shows additional hardwired startup time delay relay)	3020/06	NA
112	114	XSHH	157	PFS-COOL-115D FAN B VIBRATION	See NOTE 7																													X					5 sec delay (vendor info shows additional hardwired startup time delay relay)	3020/16	NA
113	114	XSH	158	PFS-COOL-115D FAN A VIBRATION	See NOTE 7																																	X	5 sec delay (vendor info shows additional hardwired startup time delay relay)	3020/04	NA
114	114	XSHH	159	PFS-COOL-115D FAN A VIBRATION	See NOTE 7																														X				5 sec delay (vendor info shows additional hardwired startup time delay relay)	3020/14	NA
115	114	SAH	160A	PFS-COOL-115D FAN B SPEED	66 Hz																													X					SP per RFI S-ALL-232 (66Hz = 1980 rpm).	3050/16	NA
116	114	SAH	161A	PFS-COOL-115D FAN A SPEED	66 Hz																														X				SP per RFI S-ALL-232 (66Hz = 1980 rpm).	3050/14	NA
117	114	XA	165	PFS-COOL-115D FAN B	TROUBLE																													X					5 sec delay. Alarm generated by XSHH-157 or VFD in fault lockout. VFD internally configured to stop motor (see RFI C-PBCDF-002).	3021/06	NA
118	114	XA	167	PFS-COOL-115D FAN A	TROUBLE																														X				5 sec delay. Alarm generated by XSHH-159 or VFD in fault lockout. VFD internally configured to stop motor (see RFI C-PBCDF-002).	3021/04	NA

PBCDF DEACTIVATION FURNACE SYSTEM (DFS) POLLUTION ABATEMENT SYSTEM (PAS) AND PAS FILTER SYSTEM (PFS)

PBCDF DFS PAS/PFS

ALARM AND INTERLOCK MATRIX

P&IDs: PB-6-D-506,-507, -508, -509, -523, -524,-527, -530, and -531, PB-6-H-504
PLC: ICS-CONR-112; INTERLOCK: I-10

PBCDF DFS PAS/PFS

B8:010/

- F00 - SPARE
- F01 - CLOSE ISOLATION VALVES
- F02 - SHUTDOWN KILN LUBE OIL
- F03 - SHUTDOWN HEATED DISCHARGE CONVEYOR
- F04 - SHUTDOWN HEATED DISCHARGE CONVEYOR HEATERS
- F05 - SHUTDOWN KILN DRIVE
- F06 - OSCILLATE KILN DRIVE
- F07 - SHUTDOWN AFTERBURNER COMBUSTION AIR BLOWER
- F10 - SHUTDOWN AFTERBURNER #2
- F11 - SHUTDOWN AFTERBURNER #1
- F12 - SHUTDOWN KILN COMBUSTION AIR BLOWER
- F13 - SHUTDOWN KILN BURNER
- F14 - CLOSE KILN SHROUD DAMPERS
- F15 - OPEN KILN SHROUD DAMPERS
- F16 - SPARE
- F17 - STOP FEED
- MALFUNCTION

B8:011/

- P17 - S/D PFS-COOL-115A FAN B (NOTE 1)
- P16 - S/D PFS-COOL-115A FAN A (NOTE 1)
- P15 - SD PFS-COOL-115B FAN B (NOTE 1)
- P14 - S/D PFS-COOL-115B FAN A (NOTE 1)
- P13 - S/D MIST ELIM WATER RETURN PUMP
- P12 - SWITCHOVER BRINE PUMP TO BACKUP (NOTE 1)
- P11 - SWITCHOVER CL LIQ PUMP TO BACKUP (NOTE 1)
- P10 - BYPASS CARBON FILTER (NOTE 1)
- P07 - S/D BRINE PUMPS
- P06 - S/D CLEAN LIQUOR PUMPS
- P05 - S/D PFS-COOL-115C FAN B (NOTE 1)
- P04 - S/D PFS-COOL-115C FAN A (NOTE 1)
- P03 - S/D PFS-COOL-115D FAN B (NOTE 1)
- P02 - S/D PFS-COOL-115D FAN A (NOTE 1)
- P01 - S/D IST STAGE ID FAN
- P00 - S/D 2ND STAGE ID FAN
- PREALARM

ITEM NUM	TAG NUMBER	DESCRIPTION	SET POINT	17	16	15	14	13	12	11	10	07	06	05	04	03	02	01	00	17	16	15	14	13	12	11	10	07	06	05	04	03	02	01	00	REMARKS	ALARM BIT B001:XX/XX	MASK WORD B8:XX
119	114 FISL 332	CLEAN LIQ PUMP A SEAL WATER	0.15 gpm																																	Based on the RFI response this change was incorporated with the following in the Remarks column: "5 sec delay. Alarm generated by XSHH-580 or VFD in fault lockout. VFD internally configured to stop motor."	1620/04	NA
120	114 FISL 335	CLEAN LIQ PUMP B SEAL WATER	0.15 gpm																																	3 sec delay. S/D PFS-PUMP-139 if selected as primary, which will cause 114-XA-346 to alarm. SP from instrument data sheet.	1620/06	NA
121	114 XA 340	CLEAN LIQ PUMP A (PFS-PUMP-138)	MALF	X																						X										Switchover to backup pump on malf. alarm when PFS-PUMP-138 is selected as primary.	1660/11	NA
122	114 PAL 344	CLEAN LIQ PUMP DISCH PRESS	46 psig																							X										10 sec delay after pump startup. 3 sec delay before S/D of primary pump. SP per DSIC. Response per Oct 2000 ANCDF PAS/PFS review mtg.	1650/00	NA
123	114 PALL 344	CLEAN LIQ PUMP DISCH PRESS	28 psig		X															X	X	X	X					X	X	X	X	X				RCRA AWFCO DFS 24. 10 sec delay after pump startup. SP per DSIC. Response per Oct 2000 ANCDF PAS/PFS review mtg. Listed in permit as PALL-36.	1650/04	186
124	114 XA 346	CLEAN LIQ PUMP B (PFS-PUMP-139)	MALF	X																						X										Switchover to backup pump on malf. alarm when PFS-PUMP-139 is selected as primary.	1662/11	NA
125	114 TAH 417	PFS-BURN-103 EXHAUST TEMP	172°F																																X	SP per RFI S-ALL-241 R1.	3451/14	NA
126	114 TAL 417	PFS-BURN-103 EXHAUST TEMP	135°F																																X	SP per RFI S-ALL-241 R1.	3451/16	NA
127	114 TSHH 430	PFS-BURN-103 EXHAUST TEMP	180 F		X																						X									RCRA AWFCO DFS 37. Listed in RCRA permit as TAH-549. Bypass filters per Note 3 on PB-6-D-524. SP from PB-6-D-524 does not match permit SP of 130F.	3420/10	286
128	114 XA 431	PFS-BURN-103 EXH MOIST ANALYZER	> 10% DIFF																																X	Alarm when MIT-431A & B deviation exceeds 10% of upper range value based on ROHA.	3452/00	NA
129	114 MAH 431A	PFS-BURN-103 EXH REL. HUMIDITY	60%RH																																X	Instantaneous alarm. See NOTE 8.	3451/10	TBD
130	114 MSHH 431A	PFS-BURN-103 EXH REL. HUMIDITY	80%RH		X																															RCRA AWFCO DFS 38. Instantaneous alarm. Listed in RCRA permit as MAH-550B. See NOTE 8.	3420/00	TBD
131	114 XS 431A	PFS-BURN-103 EXH MOIST ANALYZER	MALF	X	X																															On time delay. Remove instrument from ROHA calculation if it is the active unit. See NOTE 8.	3420/04	NA
132	114 MAH 431B	PFS-BURN-103 EXH REL. HUMIDITY	60%RH																																X	Instantaneous alarm. See NOTE 8.	3451/12	TBD

PBCDF DEACTIVATION FURNACE SYSTEM (DFS) POLLUTION ABATEMENT SYSTEM (PAS) AND PAS FILTER SYSTEM (PFS)

PBCDF DFS PAS/PFS

ALARM AND INTERLOCK MATRIX

PBCDF DFS PAS/PFS

P&IDs: PB-6-D-506,-507, -508, -509, -523, -524,-527, -530, and -531, PB-6-H-504
PLC: ICS-CONR-112; INTERLOCK: I-10

B8:010/

- F00 - SPARE
- F01 - CLOSE ISOLATION VALVES
- F02 - SHUTDOWN KILN LUBE OIL
- F03 - SHUTDOWN HEATED DISCHARGE CONVEYOR
- F04 - SHUTDOWN HEATED DISCHARGE CONVEYOR HEATERS
- F05 - SHUTDOWN KILN DRIVE
- F06 - OSCILLATE KILN DRIVE
- F07 - SHUTDOWN AFTERBURNER COMBUSTION AIR BLOWER
- F10 - SHUTDOWN AFTERBURNER #2
- F11 - SHUTDOWN AFTERBURNER #1
- F12 - SHUTDOWN KILN COMBUSTION AIR BLOWER
- F13 - SHUTDOWN KILN BURNER
- F14 - CLOSE KILN SHROUD DAMPERS
- F15 - OPEN KILN SHROUD DAMPERS
- F16 - SPARE
- F17 - STOP FEED
- MALFUNCTION

B8:011/

- P17 - S/D PFS-COOL-115A FAN B (NOTE 1)
- P16 - S/D PFS-COOL-115A FAN A (NOTE 1)
- P15 - SD PFS-COOL-115B FAN B (NOTE 1)
- P14 - S/D PFS-COOL-115B FAN A (NOTE 1)
- P13 - S/D MIST ELIM WATER RETURN PUMP
- P12 - SWITCHOVER BRINE PUMP TO BACKUP (NOTE 1)
- P11 - SWITCHOVER CL LIQ PUMP TO BACKUP (NOTE 1)
- P10 - BYPASS CARBON FILTER (NOTE 1)
- P07 - S/D BRINE PUMPS
- P06 - S/D CLEAN LIQUOR PUMPS
- P05 - S/D PFS-COOL-115C FAN B (NOTE 1)
- P04 - S/D PFS-COOL-115C FAN A (NOTE 1)
- P03 - S/D PFS-COOL-115D FAN B (NOTE 1)
- P02 - S/D PFS-COOL-115D FAN A (NOTE 1)
- P01 - S/D IST STAGE ID FAN
- P00 - S/D 2ND STAGE ID FAN
- PREALARM

ITEM NUM	TAG NUMBER	DESCRIPTION	SET POINT	17	16	15	14	13	12	11	10	07	06	05	04	03	02	01	00	17	16	15	14	13	12	11	10	07	06	05	04	03	02	01	00		REMARKS	ALARM BIT B001:XX/XX	MASK WORD B8:XX
133	114 MSHH 431B	PFS-BURN-103 EXH REL. HUMIDITY	80%RH		X																																RCRA AWFCO DFS 38. Instantaneous alarm. Listed in RCRA permit as MAH-550B. See NOTE 8.	3420/02	TBD
134	114 XS 431B	PFS-BURN-103 EXH MOIST ANALYZER	MALF	X	X																																On time delay. Remove instrument from ROHA calculation if it is the active unit. See NOTE 8.	3420/06	NA
135	114 MAH 431C	PFS-BURN-103 EXH REL. HUMIDITY	52%RH																																	X	ROHA. See NOTE 8.	TBD	NA
136	114 MAHH 431C	PFS-BURN-103 EXH REL. HUMIDITY	55%RH		X																																ROHA. See NOTE 8.	TBD	NA
137	114 PDAH 440A	PFS-FILT-111 PREFILTER BANK	2.0 in wc																																	X	SP per RFI S-ALL-232.	3450/00	NA
138	114 PDAHH 440A	PFS-FILT-111 PREFILTER BANK	10 in wc		X																																RCRA AWFCO DFS 35. Listed in permit as PDAH-644A. See NOTE 3. Tag # recommended by DSIC and is not shown on PB-6-D-523.	TBD	TBD
139	114 PDAH 440B	PFS-FILT-111 1st HEPA FILTER BANK	4.0 in wc																																	X	SP per RFI S-ALL-232.	3450/02	NA
140	114 PDAHH 440B	PFS-FILT-111 1st HEPA FILTER BANK	10 in wc		X																																RCRA AWFCO DFS 36. Listed in permit as PDAH-644B. See NOTE 3. Tag # recommended by DSIC and is not shown on PB-6-D-523.	TBD	TBD
141	114 PDAH 440C	PFS-FILT-111 1st CARBON FILT BANK	3.5 in wc																																	X	SP per RFI S-ALL-232.	3450/04	NA
142	114 PDAH 440D	PFS-FILT-111 2nd CARBON FILT BANK	3.5 in wc																																	X	SP per RFI S-ALL-232.	3450/06	NA
143	114 PDAH 440E	PFS-FILT-111 2nd HEPA FILTER BANK	4.0 in wc																																	X	SP per RFI S-ALL-232.	3450/10	NA
144	114 PDAH 440F	PFS-FILT-111 OVERALL DP	16 in wc																																	X	SP per RFI S-ALL-232.	3450/12	NA
145	114 PDAH 442A	PFS-FILT-112 PREFILTER BANK	2.0 in wc																																	X	SP per RFI S-ALL-232.	3450/14	NA
146	114 PDAHH 442A	PFS-FILT-112 PREFILTER BANK	10 in wc		X																																RCRA AWFCO DFS 35. Listed in permit as PDAH-646A. See NOTE 3. Tag # recommended by DSIC and is not shown on PB-6-D-523.	TBD	TBD
147	114 PDAH 442B	PFS-FILT-112 1st HEPA FILTER BANK	4.0 in wc																																	X	SP per RFI S-ALL-232.	3450/16	NA
148	114 PDAHH 442B	PFS-FILT-112 1st HEPA FILTER BANK	10 in wc		X																																RCRA AWFCO DFS 36. Listed in permit as PDAH-646B. See NOTE 3. Tag # recommended by DSIC and is not shown on PB-6-D-523.	TBD	TBD
149	114 PDAH 442C	PFS-FILT-112 1st CARBON FILT BANK	3.5 in wc																																	X	SP per RFI S-ALL-232.	3451/00	NA
150	114 PDAH 442D	PFS-FILT-112 2nd CARBON FILT BANK	3.5 in wc																																	X	SP per RFI S-ALL-232.	3451/02	NA
151	114 PDAH 442E	PFS-FILT-112 2nd HEPA FILTER BANK	4.0 in wc																																	X	SP per RFI S-ALL-232.	3451/04	NA
152	114 PDAH 442F	PFS-FILT-112 OVERALL DP	16 in wc																																	X	SP per RFI S-ALL-232.	3451/06	NA
153	114 ZS 449B	PFS-FILT-111/112 BYPASS DAMPER	NOT CLOSED		X																																RCRA AWFCO DFS 39. Agent feed permissive per PB-6-D-524 Note 4. Listed in permit as TV-549B with setpoint "OPEN."	3461/14	TBD
154	114 PDAH 511	PFS-COOL-115B CLEAN LIQ COOLER	20 psid																																	X	SP per RFI S-ALL-232.	0850/06	NA

PBCDF DEACTIVATION FURNACE SYSTEM (DFS) POLLUTION ABATEMENT SYSTEM (PAS) AND PAS FILTER SYSTEM (PFS)

PBCDF DFS PAS/PFS

ALARM AND INTERLOCK MATRIX

P&IDs: PB-6-D-506,-507, -508, -509, -523, -524,-527, -530, and -531, PB-6-H-504
PLC: ICS-CONR-112; INTERLOCK: I-10

PBCDF DFS PAS/PFS

B8:010/

F00 - SPARE
F01 - CLOSE ISOLATION VALVES
F02 - SHUTDOWN KILN LUBE OIL
F03 - SHUTDOWN HEATED DISCHARGE CONVEYOR
F04 - SHUTDOWN HEATED DISCHARGE CONVEYOR HEATERS
F05 - SHUTDOWN KILN DRIVE
F06 - OSCILLATE KILN DRIVE
F07 - SHUTDOWN AFTERBURNER COMBUSTION AIR BLOWER
F10 - SHUTDOWN AFTERBURNER #2
F11 - SHUTDOWN AFTERBURNER #1
F12 - SHUTDOWN KILN COMBUSTION AIR BLOWER
F13 - SHUTDOWN KILN BURNER
F14 - CLOSE KILN SHROUD DAMPERS
F15 - OPEN KILN SHROUD DAMPERS
F16 - SPARE
F17 - STOP FEED
MALFUNCTION

B8:011/

P17 - S/D PFS-COOL-115A FAN B (NOTE 1)
P16 - S/D PFS-COOL-115A FAN A (NOTE 1)
P15 - SD PFS-COOL-115B FAN B (NOTE 1)
P14 - S/D PFS-COOL-115B FAN A (NOTE 1)
P13 - S/D MIST ELIM WATER RETURN PUMP
P12 - SWITCHOVER BRINE PUMP TO BACKUP (NOTE 1)
P11 - SWITCHOVER CL LIQ PUMP TO BACKUP (NOTE 1)
P10 - BYPASS CARBON FILTER (NOTE 1)
P07 - S/D BRINE PUMPS
P06 - S/D CLEAN LIQUOR PUMPS
P05 - S/D PFS-COOL-115C FAN B (NOTE 1)
P04 - S/D PFS-COOL-115C FAN A (NOTE 1)
P03 - S/D PFS-COOL-115D FAN B (NOTE 1)
P02 - S/D PFS-COOL-115D FAN A (NOTE 1)
P01 - S/D IST STAGE ID FAN
P00 - S/D 2ND STAGE ID FAN
PREALARM

ITEM NUM	TAG NUMBER	DESCRIPTION	SET POINT	17	16	15	14	13	12	11	10	07	06	05	04	03	02	01	00	17	16	15	14	13	12	11	10	07	06	05	04	03	02	01	00		REMARKS	ALARM BIT B001:XX/XX	MASK WORD B8:XX
155	114 PDAL 511	PFS-COOL-115B CLEAN LIQ COOLER	8 psid																																	X	SP per RFI S-ALL-232.	0850/04	NA
156	114 PDAH 540	PFS-COOL-115C CLEAN LIQ COOLER	20 psid																																	X	SP per RFI S-ALL-232.	3050/04	NA
157	114 PDAL 540	PFS-COOL-115C CLEAN LIQ COOLER	8 psid																																	X	SP per RFI S-ALL-232.	3051/04	NA
158	114 TAH 559	PFS-COOL-115C CLEAN LIQ COOLER	135°F																																	X	SP per RFI S-ALL-232.	3050/00	NA
159	114 TAL 559	PFS-COOL-115C CLEAN LIQ COOLER	100°F																											X	X						SP per RFI S-ALL-232. Instant alarm, 120-sec delay for cooler S/D (see FAWB Note B-20).	3051/00	NA
160	114 XSH 560	PFS-COOL-115C FAN B VIBRATION	See NOTE 7																																	X	5 sec delay (vendor info shows additional hardwired startup time delay relay)	3020/02	NA
161	114 XSHH 561	PFS-COOL-115C FAN B VIBRATION	See NOTE 7																											X							5 sec delay (vendor info shows additional hardwired startup time delay relay)	3020/12	NA
162	114 XSH 563	PFS-COOL-115C FAN A VIBRATION	See NOTE 7																																	X	5 sec delay (vendor info shows additional hardwired startup time delay relay)	3020/00	NA
163	114 XSHH 564	PFS-COOL-115C FAN A VIBRATION	See NOTE 7																												X						5 sec delay (vendor info shows additional hardwired startup time delay relay)	3020/10	NA
164	114 SAH 565A	PFS-COOL-115C FAN B SPEED	66 Hz																											X							SP per RFI S-ALL-232 (66Hz = 1980 rpm).	3050/12	NA
165	114 SAH 566A	PFS-COOL-115C FAN A SPEED	66 Hz																												X						SP per RFI S-ALL-232 (66Hz = 1980 rpm).	3050/10	NA
166	114 XA 570	PFS-COOL-115C FAN B	TROUBLE																											X							5 sec delay. Alarm generated by XSHH-561 or VFD in fault lockout. VFD internally configured to stop motor (see RFI C-PBCDF-002).	3021/02	NA
167	114 XA 572	PFS-COOL-115C FAN A	TROUBLE																												X						5 sec delay. Alarm generated by XSHH-564 or VFD in fault lockout. VFD internally configured to stop motor (see RFI C-PBCDF-002).	3021/00	NA
168	114 TAH 578	PFS-COOL-115B CLEAN LIQ COOLER	135°F																																	X	SP per RFI S-ALL-232.	0850/16	NA
169	114 TAL 578	PFS-COOL-115B CLEAN LIQ COOLER	100°F																			X	X														SP per RFI S-ALL-232. Instant alarm, 120-sec delay for cooler S/D (see FAWB Note B-20).	0850/14	NA
170	114 XSH 579	PFS-COOL-115B FAN B VIBRATION	See NOTE 7																																	X	5 sec delay (vendor info shows additional hardwired startup time delay relay)	0820/06	NA
171	114 XSHH 580	PFS-COOL-115B FAN B VIBRATION	See NOTE 7																			X															5 sec delay (vendor info shows additional hardwired startup time delay relay)	0820/16	NA
172	114 XSH 581	PFS-COOL-115B FAN A VIBRATION	See NOTE 7																																	X	5 sec delay (vendor info shows additional hardwired startup time delay relay)	0820/04	NA
173	114 XSHH 592	PFS-COOL-115B FAN A VIBRATION	See NOTE 7																				X														5 sec delay (vendor info shows additional hardwired startup time delay relay)	0820/14	NA
174	114 SAH 593A	PFS-COOL-115B FAN B SPEED	66 Hz																			X															SP per RFI S-ALL-232 (66Hz = 1980 rpm).	0851/06	NA
175	114 SAH 594A	PFS-COOL-115B FAN A SPEED	66 Hz																				X														SP per RFI S-ALL-232 (66Hz = 1980 rpm).	0851/04	NA

PBCDF DEACTIVATION FURNACE SYSTEM (DFS) POLLUTION ABATEMENT SYSTEM (PAS) AND PAS FILTER SYSTEM (PFS)

PBCDF DFS PAS/PFS

ALARM AND INTERLOCK MATRIX

P&IDs: PB-6-D-506,-507, -508, -509, -523, -524,-527, -530, and -531, PB-6-H-504
PLC: ICS-CONR-112; INTERLOCK: I-10

PBCDF DFS PAS/PFS

F00 - SPARE
F01 - CLOSE ISOLATION VALVES
F02 - SHUTDOWN KILN LUBE OIL
F03 - SHUTDOWN HEATED DISCHARGE CONVEYOR
F04 - SHUTDOWN HEATED DISCHARGE CONVEYOR HEATERS
F05 - SHUTDOWN KILN DRIVE
F06 - OSCILLATE KILN DRIVE
F07 - SHUTDOWN AFTERBURNER COMBUSTION AIR BLOWER
F10 - SHUTDOWN AFTERBURNER #2
F11 - SHUTDOWN AFTERBURNER #1
F12 - SHUTDOWN KILN COMBUSTION AIR BLOWER
F13 - SHUTDOWN KILN BURNER
F14 - CLOSE KILN SHROUD DAMPERS
F15 - OPEN KILN SHROUD DAMPERS
F16 - SPARE
F17 - STOP FEED
MALFUNCTION

P17 - S/D PFS-COOL-115A FAN B (NOTE 1)
P16 - S/D PFS-COOL-115A FAN A (NOTE 1)
P15 - SD PFS-COOL-115B FAN B (NOTE 1)
P14 - S/D PFS-COOL-115B FAN A (NOTE 1)
P13 - S/D MIST ELIM WATER RETURN PUMP
P12 - SWITCHOVER BRINE PUMP TO BACKUP (NOTE 1)
P11 - SWITCHOVER CL LIQ PUMP TO BACKUP (NOTE 1)
P10 - BYPASS CARBON FILTER (NOTE 1)
P07 - S/D BRINE PUMPS
P06 - S/D CLEAN LIQUOR PUMPS
P05 - S/D PFS-COOL-115C FAN B (NOTE 1)
P04 - S/D PFS-COOL-115C FAN A (NOTE 1)
P03 - S/D PFS-COOL-115D FAN B (NOTE 1)
P02 - S/D PFS-COOL-115D FAN A (NOTE 1)
P01 - S/D IST STAGE ID FAN
P00 - S/D 2ND STAGE ID FAN
PREALARM

ITEM NUM	TAG NUMBER			DESCRIPTION	SET POINT	B8:010/ 17	16	15	14	13	12	11	10	07	06	05	04	03	02	01	00	B8:011/ 17	16	15	14	13	12	11	10	07	06	05	04	03	02	01	00	REMARKS	ALARM BIT B001:XX/XX	MASK WORD B8:XX
176	114	XA	598	PFS-COOL-115B FAN B	TROUBLE																			X														5 sec delay. Alarm generated by XSHH-580 or VFD in fault lockout. VFD internally configured to stop motor (see RFI C-PBCDF-002).	0821/06	NA
177	114	XA	600	PFS-COOL-115B FAN A	TROUBLE																				X													5 sec delay. Alarm generated by XSHH-592 or VFD in fault lockout. VFD internally configured to stop motor (see RFI C-PBCDF-002).	0821/04	NA
178	114	TAH	608	PFS-COOL-115A CLEAN LIQ COOLER	135°F																																X	SP per RFI S-ALL-232.	0850/12	NA
179	114	TAL	608	PFS-COOL-115A CLEAN LIQ COOLER	100°F																	X	X															SP per RFI S-ALL-232. Instant alarm, 120-sec delay for cooler S/D (see FAWB Note B-20).	0850/10	NA
180	114	XSH	609	PFS-COOL-115A FAN B VIBRATION	See NOTE 7																																X	5 sec delay (vendor info shows additional hardwired startup time delay relay)	0820/02	NA
181	114	XSHH	610	PFS-COOL-115A FAN B VIBRATION	See NOTE 7																	X																5 sec delay (vendor info shows additional hardwired startup time delay relay)	0820/12	NA
182	114	XSH	611	PFS-COOL-115A FAN A VIBRATION	See NOTE 7																																X	5 sec delay (vendor info shows additional hardwired startup time delay relay)	0820/00	NA
183	114	XSHH	612	PFS-COOL-115A FAN A VIBRATION	See NOTE 7																		X															5 sec delay (vendor info shows additional hardwired startup time delay relay)	0820/10	NA
184	114	SAH	613A	PFS-COOL-115A FAN B SPEED	66 Hz																	X																SP per RFI S-ALL-232 (66Hz = 1980 rpm).	0851/02	NA
185	114	SAH	614A	PFS-COOL-115A FAN A SPEED	66 Hz																		X															SP per RFI S-ALL-232 (66Hz = 1980 rpm).	0851/00	NA
186	114	PDAH	615	PFS-COOL-115A CLEAN LIQ COOLER	20 psid																																X	SP per RFI S-ALL-232.	0850/02	NA
187	114	PDAL	615	PFS-COOL-115A CLEAN LIQ COOLER	8 psid																																X	SP per RFI S-ALL-232.	0850/00	NA
188	114	XA	623	PFS-COOL-115A FAN B	TROUBLE																	X																5 sec delay. Alarm generated by XSHH-610 or VFD in fault lockout. VFD internally configured to stop motor (see RFI C-PBCDF-002).	0821/02	NA
189	114	XA	625	PFS-COOL-115A FAN A	TROUBLE																		X															5 sec delay. Alarm generated by XSHH-612 or VFD in fault lockout. VFD internally configured to stop motor (see RFI C-PBCDF-002).	0821/00	NA
190	114	XA	780	PFS-BURN-103 BURNER TROUBLE S/D	LOCKOUT		X																															Stop feed per PB-6-D-524.	3421/00	TBD
191	114	TISH	874	PFS-BURN-103 EXHAUST TEMP	168°F																																X	On time delay. SP per DSIC.	3420/12	NA
192	114	TSHH	874	PFS-BURN-103 EXHAUST TEMP	176°F																																	On time delay. S/D PFS-BURN-103. SP per DSIC.	3420/14	NA
193	MON	ACAM	129	ACAMS COMMON STACK	NOTE 5		X																															RCRA AWFCO DFS 21. See NOTE 3. Stop feed for DFS, LIC, and MPF.	2620/16	240
194	MON	ACAM	129	ACAMS COMMON STACK	MALF	X	X																															RCRA AWFCO DFS 21. See NOTE 3. Stop feed for DFS, LIC, and MPF.	2620/16	240

PBCDF DEACTIVATION FURNACE SYSTEM (DFS) POLLUTION ABATEMENT SYSTEM (PAS) AND PAS FILTER SYSTEM (PFS)

PBCDF DFS PAS/PFS

ALARM AND INTERLOCK MATRIX

PBCDF DFS PAS/PFS

P&IDs: PB-6-D-506,-507, -508, -509, -523, -524,-527, -530, and -531, PB-6-H-504
PLC: ICS-CONR-112; INTERLOCK: I-10

B8:010/

- **F00 - SPARE**
- **F01 - CLOSE ISOLATION VALVES**
- **F02 - SHUTDOWN KILN LUBE OIL**
- **F03 - SHUTDOWN HEATED DISCHARGE CONVEYOR**
- **F04 - SHUTDOWN HEATED DISCHARGE CONVEYOR HEATERS**
- **F05 - SHUTDOWN KILN DRIVE**
- **F06 - OSCILLATE KILN DRIVE**
- **F07 - SHUTDOWN AFTERBURNER COMBUSTION AIR BLOWER**
- **F10 - SHUTDOWN AFTERBURNER #2**
- **F11 - SHUTDOWN AFTERBURNER #1**
- **F12 - SHUTDOWN KILN COMBUSTION AIR BLOWER**
- **F13 - SHUTDOWN KILN BURNER**
- **F14 - CLOSE KILN SHROUD DAMPERS**
- **F15 - OPEN KILN SHROUD DAMPERS**
- **F16 - SPARE**
- **F17 - STOP FEED**

B8:011/

- **P17 - S/D PFS-COOL-115A FAN B (NOTE 1)**
- **P16 - S/D PFS-COOL-115A FAN A (NOTE 1)**
- **P15 - SD PFS-COOL-115B FAN B (NOTE 1)**
- **P14 - S/D PFS-COOL-115B FAN A (NOTE 1)**
- **P13 - S/D MIST ELIM WATER RETURN PUMP**
- **P12 - SWITCHOVER BRINE PUMP TO BACKUP (NOTE 1)**
- **P11 - SWITCHOVER CL LIQ PUMP TO BACKUP (NOTE 1)**
- **P10 - BYPASS CARBON FILTER (NOTE 1)**
- **P07 - S/D BRINE PUMPS**
- **P06 - S/D CLEAN LIQUOR PUMPS**
- **P05 - S/D PFS-COOL-115C FAN B (NOTE 1)**
- **P04 - S/D PFS-COOL-115C FAN A (NOTE 1)**
- **P03 - S/D PFS-COOL-115D FAN B (NOTE 1)**
- **P02 - S/D PFS-COOL-115D FAN A (NOTE 1)**
- **P01 - S/D IST STAGE ID FAN**
- **P00 - S/D 2ND STAGE ID FAN**

MALFUNCTION **PREALARM**

ITEM NUM	TAG NUMBER	DESCRIPTION	SET POINT	MALFUNCTION	17	16	15	14	13	12	11	10	07	06	05	04	03	02	01	00	17	16	15	14	13	12	11	10	07	06	05	04	03	02	01	00	PREALARM	REMARKS	ALARM BIT B001:XX/XX	MASK WORD B8:XX
195	MON ACAM 129	ACAMS COMMON STACK	OFFLINE		X																																	RCRA AWFCO DFS 21. See NOTE 3. Stop feed for DFS, LIC, and MPF.	2620/16	240
196	MON ACAM 129	ACAMS COMMON STACK	NOT STAGGERED		X																																	RCRA AWFCO DFS 21. See NOTE 3. Stop feed for DFS, LIC, and MPF.	2620/16	240
197	MON ACAM 183	ACAMS DFS PAS	NOTE 5		X																																	RCRA AWFCO DFS 19. See NOTE 3.	2620/06	132
198	MON ACAM 183	ACAMS DFS PAS	MALF	X	X																																	RCRA AWFCO DFS 19. See NOTE 3.	2620/06	132
199	MON ACAM 183	ACAMS DFS PAS	OFFLINE		X																																	RCRA AWFCO DFS 19. See NOTE 3.	2620/06	132
200	MON ACAM 297	ACAMS DFS CYCLONE ENCLOSURE	NOTE 5		X																																	RCRA AWFCO DFS 20. See NOTE 3.	TBD	TBD
201	MON ACAM 297	ACAMS DFS CYCLONE ENCLOSURE	MALF	X	X																																	RCRA AWFCO DFS 20. See NOTE 3.	TBD	TBD
202	MON ACAM 297	ACAMS DFS CYCLONE ENCLOSURE	OFFLINE		X																																	RCRA AWFCO DFS 20. See NOTE 3.	TBD	TBD
203		BRA TANKS LVL HI-HI / UNAVAILABLE	DICO		X																																	RCRA AWFCO DFS 22. See BRA FAWB for tag #s and setpoints.	B4:23/01	210

NOTE 1: P02, P03, P04, P05, P10, P11, P12, P14, P15, P16, and P17 responses are not part of the deathwish relay. These responses are included as column headings for presentation clarity.
NOTE 2: The PBCDF CEMS alarm configuration is based on the response to RFI S-ALL-249 and does not reflect the configuration shown on the referenced versions of the P&IDs. ECP PBSP1174MON was recently issued, but not yet incorporated into the design, that adds redundant NOx, SO2, O2, and CO monitors on the common stack. New alarms associated with these monitors will be included in a future PAS/PFS FAWB revision.
NOTE 3: RCRA AWFCO setpoints from 1-15-99 PBCDF RCRA permit Table VII-15 - Deactivation Furnace System Waste-Feed Cutoff Parameters. Some setpoints may be modified based on trial burn results.
NOTE 4: 24-LSHHH-032 additional interlocks: 1) close 24-XV-026 and inhibit timer activation, 2) close 24-XY-380B/D, 3) close 24-XY-382B/D. Also when controllers are in AUTO, 1) close 24-LV-031, 2) close 24-LV-010, 3) close 24-AV-034, 4) close 24-AV-007.
NOTE 5: ACAMS RCRA AWFCO setpoints are 1 ASC (allowable stack concentration), which are (mg/m3) : GB= 0.0003, HD/HT= 0.03, and VX=0.0003.
NOTE 6: PAS exhaust blower vibration alarms reflect the current design. Per RFI C-ANCDF-005, the blower foundation design requires that the foundation vibration be < 1 mil double amplitude. This requirment was the basis for recommended setpoints in RFI S-ALL-0232. The vibration alarm setpoints may be changed, or new alarms added, to meet the foundation vibration design limits.
NOTE 7: After the Oct 2000 AN PAS/PFS review meeting, the DSIC investigated the clean liquor air cooler vibration alarm setpoints. They found that the Murphy vibration switches are set by turning an uncalibrated screw. Specific vibration units could not be determined. The high vibration switch is set by turning the screw 1/4 turn past its start-up trip point and the high-high switch is set by turning the screw 1/2 turn past its start-up trip point.
NOTE 8: At the Oct 2000 ANCDF PAS/PFS review meetings, the ANCDF PFS gas reheater exhaust moisture alarm configuration was modified. These changes have been incorporated in the ANCDF design. The changes are also being carried forward to PBCDF, but have not yet been implemented. Therefore, the moisture alarms listed in this matrix reflect the ANCDF design configuration and do not match the PBCDF design documentation.

PBCDF LIQUID INCINERATOR (LIC) POLLUTION ABATEMENT SYSTEM (PAS) AND PAS FILTER SYSTEM (PFS)

PBCDF LIC PAS/PFS

ALARM AND INTERLOCK MATRIX

P&IDs: PB-1-D-526, PB-6-D-501,-502, -507, -517,-523, -535, and -539
PLC: ICS-CONR-114; INTERLOCK: I-7

PBCDF LIC PAS/PFS

F00 - SPARE
F01 - SPARE
F02 - SPARE
F03 - SPARE
F04 - S/D AGENT PUMPS
F05 - LOCKOUT SECONDARY BURNER (NOTE 1)
F06 - LOCKOUT PRIMARY BURNER (NOTE 1)
F07 - INHIBIT FUEL OIL PURGE OF AGENT LINE
F10 - S/D SEC COMB AIR BLOWER
F11 - S/D PRI COMB AIR BLOWER
F12 - SPARE
F13 - CLOSE DECON/PRW VALVE
F14 - STOP DECON FEED/SWITCH TO PRW
F15 - STOP AGENT FEED
F16 - S/D SEC BURNER
F17 - S/D PRI BURNER
MALFUNCTION

P17 - SHUTDOWN PFS-COOL-113A FAN B
P16 - SHUTDOWN PFS-COOL-113A FAN A
P15 - SHUTDOWN PFS-COOL-113B FAN B
P14 - SHUTDOWN PFS-COOL-113B FAN A
P13 - OPEN QUENCH EMERG. PRW
P12 - S/D WATER RETURN PUMP
P11 - BKUP BRINE PUMP ON (NOTE 1)
P10 - BKUP CLEAN LIQ PUMP ON (NOTE 1)
P07 - SPARE
P06 - S/D BRINE PUMPS
P05 - S/D CLEAN LIQUOR PUMPS
P04 - S/D 1ST & 2ND STAGE ID FAN
P03 - SPARE
P02 - BYPASS CARBON FILTER
P01 - S/D IST STAGE ID FAN
P00 - S/D 2ND STAGE ID FAN
PREALARM

ITEM NUM	TAG NUMBER	DESCRIPTION	SET POINT	B8:010/ 17	16	15	14	13	12	11	10	07	06	05	04	03	02	01	00	B8:011/ 17	16	15	14	13	12	11	10	07	06	05	04	03	02	01	00	REMARKS	ALARM BIT B001:XX/XX	MASK WORD B8:XX
1	13 AAH 083	SEC CHMBR EXHAUST CO	90 ppm																																X	ROHA prealarm. Corrected to 7% O2 dry basis. See NOTE 2.	TBD	NA
2	13 AAHH 083	SEC CHMBR EXHAUST CO	160 ppm			X	X					X																								Instantaneous alarm. Corrected to 7% O2 dry basis. See NOTE 2.	TBD	TBD
3	13 AAHH 083	SEC CHMBR EXHAUST CO	100 ppm			X	X					X																								RCRA AWFCO LIC 12. ROHA. Corrected to 7% O2, dry basis. See NOTEs 2 & 3.	1051/10	22
4	13/24 HS 083A/078A	BOTH LIC PAS CO ANALYZERS IN CAL	In Calib.			X	X					X																								See NOTE 2.	1222/06	246
5	13 XS 083	SEC CHMBR EXHAUST CO	MALF	X		X	X					X																								Stop feed on malf. alarm only if 24-AIT-078 is also in malf. or is in "calibrate" mode. Alarm active only when combined fuel flow to primary and secondary > 100 scfm. See NOTE 2.	1020/14 1222/12	62
6	13 AAH 229	SEC CHMBR EXHAUST O2	14% O2																																X	ROHA prealarm. Corrected to dry basis. See NOTE 2.	TBD	NA
7	13 AAH 229	SEC CHMBR EXHAUST O2	20% O2			X	X					X																								Instantaneous alarm. Corrected to dry basis. See NOTE 2.	TBD	TBD
8	13 AAHH 229	SEC CHMBR EXHAUST O2	15% O2			X	X					X																								RCRA AWFCO LIC 27. ROHA. Corrected to dry basis. See NOTEs 2 & 3.	1050/04	34
9	13 AAL 229	SEC CHMBR EXHAUST O2	4% O2																																X	ROHA prealarm. Corrected to dry basis. See NOTE 2.	TBD	NA
10	13 AAL 229	SEC CHMBR EXHAUST O2	2% O2			X	X					X																								Instantaneous alarm. Corrected to dry basis. See NOTE 2.	TBD	TBD
11	13 AALL 229	SEC CHMBR EXHAUST O2	3% O2			X	X					X																								RCRA AWFCO LIC 26. ROHA. Corrected to dry basis. See NOTEs 2 & 3.	TBD	TBD
12	13/24 HS 229A/210A	BOTH LIC PAS O2 ANALYZERS IN CAL	In Calib.			X	X					X																								See NOTE 2.	1222/04	244
13	13 XS 229	SEC CHMBR EXHAUST O2	MALF	X		X	X					X																								Stop feed on malf. alarm only if 24-AIT-210 is also in malf. or is in "calibrate" mode. See NOTE 2.	1021/14 1222/10	36
14	24 TSH 058A-F	2nd STAGE ID FAN WINDING TEMP	320°F			X	X					X																								SP from vendor info. Alarm on high temp for any of 24-TSH-058A through F. Stop feed per PB-6-D-517 Note 13.	1222/14	NA
15	24 TSHH 058A-F	2nd STAGE ID FAN WINDING TEMP	329°F																															X		SP from vendor info. Alarm on high-high temp for any of 24-TSHH-058A through F. PB-6-D-517 Note 14 specifies S/D 2nd stage, except when running in emergency mode.	1220/00	128

PBCDF LIQUID INCINERATOR (LIC) POLLUTION ABATEMENT SYSTEM (PAS) AND PAS FILTER SYSTEM (PFS)

PBCDF LIC PAS/PFS

ALARM AND INTERLOCK MATRIX

P&IDs: PB-1-D-526, PB-6-D-501,-502, -507, -517,-523, -535, and -539

PLC: ICS-CONR-114; INTERLOCK: I-7

PBCDF LIC PAS/PFS

F00 - SPARE
F01 - SPARE
F02 - SPARE
F03 - SPARE
F04 - S/D AGENT PUMPS
F05 - LOCKOUT SECONDARY BURNER (NOTE 1)
F06 - LOCKOUT PRIMARY BURNER (NOTE 1)
F07 - INHIBIT FUEL OIL PURGE OF AGENT LINE
F10 - S/D SEC COMB AIR BLOWER
F11 - S/D PRI COMB AIR BLOWER
F12 - SPARE
F13 - CLOSE DECON/PRW VALVE
F14 - STOP DECON FEED/SWITCH TO PRW
F15 - STOP AGENT FEED
F16 - S/D SEC BURNER
F17 - S/D PRI BURNER
MALFUNCTION

P17 - SHUTDOWN PFS-COOL-113A FAN B
P16 - SHUTDOWN PFS-COOL-113A FAN A
P15 - SHUTDOWN PFS-COOL-113B FAN B
P14 - SHUTDOWN PFS-COOL-113B FAN A
P13 - OPEN QUENCH EMERG. PRW
P12 - S/D WATER RETURN PUMP
P11 - BKUP BRINE PUMP ON (NOTE 1)
P10 - BKUP CLEAN LIQ PUMP ON (NOTE 1)
P07 - SPARE
P06 - S/D BRINE PUMPS
P05 - S/D CLEAN LIQUOR PUMPS
P04 - S/D 1ST & 2ND STAGE ID FAN
P03 - SPARE
P02 - BYPASS CARBON FILTER
P01 - S/D IST STAGE ID FAN
P00 - S/D 2ND STAGE ID FAN
PREALARM

ITEM NUM	TAG NUMBER			DESCRIPTION		SET POINT	B8:010/ 17	16	15	14	13	12	11	10	07	06	05	04	03	02	01	00	B8:011/ 17	16	15	14	13	12	11	10	07	06	05	04	03	02	01	00		REMARKS	ALARM BIT B001:XX/XX	MASK WORD B8:XX
16	24	XA	070	1st & 2nd STAGE ID FAN		NOT RUNNING		X	X	X	X			X	X	X																									I:313/00 I:313/02	116
17	24	XA	071	ID FAN	2ND STAGE MTR	MALF	X			X	X					X																							X		Start I-lock for 2nd stage motor.	1263/11	120
18	24	XA	072	2nd STAGE ID FAN	TROUBLE	Trouble				X	X					X																							X		Alarm response per RFI C-ANCDF-002. Trouble alarm initiated by ASD motor thermal overload which stops the motor.	1223/06	TBD
19	24	SAH	072A	2nd STAGE ID FAN	SPEED	1800 rpm				X	X					X																							X		SP per RFI S-ALL-232.	1250/16	TBD
20	24	AAH	078	LIC EXH GAS	CO TO STACK	160 ppm				X	X					X																									Instantaneous alarm. Corrected to 7% O2 dry basis. See NOTE 2.	1250/06	24
21	24	AAH	078	LIC EXH GAS	CO TO STACK	90 ppm				X	X					X																									ROHA alarm. Corrected to 7% O2 dry basis. See NOTE 2.	TBD	TBD
22	24	XS	078	LIC EXH GAS	CO TO STACK	MALF	X			X	X					X																									Stop feed on malf. alarm only if 13-AIT-083 is also in malf. or is in "calibrate" mode. Alarm active only when combined fuel flow to primary and secondary > 100 scfm. See NOTE 2.	1220/04 1222/12	62
23	24	XAH	079	2nd STAGE ID FAN	VIBRATION	0.25 in/sec				X	X					X																									3 sec delay. See NOTE 6.	1251/06	TBD
24	24	XSHH	079	2nd STAGE ID FAN	VIBRATION	0.5 in/sec																																	X		3 sec delay. S/D 2nd stage, except when running in emergency mode. See NOTE 6.	1220/06	64
25	24	PDAH	082	PAS SCRUBBER	MIST PAD	2 in wc																																		X		1651/06	NA
26	24	DAH	083	PAS QUENCH	BRINE DENSITY	1.20 sg																																		X	Setpoint from RFI S-ALL-0232	1850/16	NA
27	24	DAHH	083	PAS QUENCH	BRINE DENSITY	1.25 sg				X	X					X																									Setpoint from RFI S-ALL-0232	1851/02	228
28	24	FAL	084	PAS QUENCH	BRINE	60 gpm																																		X		1450/00	NA
29	24	FAL	088	BRINE TO LIC	VENTURI SCRBR	TBD																																		X	5 sec delay. Prealarm per RFI C-ANCDF-003R1. See RFI for SP discussion.	TBD	NA
30	24	FALL	088	BRINE TO LIC	VENTURI SCRBR	TBD				X	X					X																									RCRA AWFCO LIC 23; 30 sec delay. Alarm per RFI C-ANCDF-003R1. See RFI for SP discussion. Permit lists alarm as FAL-088. Alarm not shown on PB-6-D-501.	1850/02	66
31	24	TSHH	089	PAS QUENCH	OVERHEAD	215 F				X	X					X											X														SP per PBAC0788ICS R1 & PBAP981INS. See FAWB Note B-7.	1420/00	68
32	24	PDAH	090	PAS VENTURI	SCRUBBER	SP+10 in wc																																		X	SP=setpoint entered in controller by operator	1850/06	NA
33	24	PDAL	090	PAS VENTURI	SCRUBBER	25 in wc																																		X		1850/04	NA
34	24	PDALL	090	PAS VENTURI	SCRUBBER	20 in wc				X	X					X																									RCRA AWFCO LIC 15. See NOTE 3.	1851/00	72
35	24	AAH	091	PAS QUENCH	BRINE pH	9.5 pH																																		X		1850/12	NA

PBCDF LIQUID INCINERATOR (LIC) POLLUTION ABATEMENT SYSTEM (PAS) AND PAS FILTER SYSTEM (PFS)

PBCDF LIC PAS/PFS

ALARM AND INTERLOCK MATRIX

P&IDs: PB-1-D-526, PB-6-D-501,-502, -507, -517,-523, -535, and -539
PLC: ICS-CONR-114; INTERLOCK: I-7

PBCDF LIC PAS/PFS

B8:010/

- F00 - SPARE
- F01 - SPARE
- F02 - SPARE
- F03 - SPARE
- F04 - S/D AGENT PUMPS
- F05 - LOCKOUT SECONDARY BURNER (NOTE 1)
- F06 - LOCKOUT PRIMARY BURNER (NOTE 1)
- F07 - INHIBIT FUEL OIL PURGE OF AGENT LINE
- F10 - S/D SEC COMB AIR BLOWER
- F11 - S/D PRI COMB AIR BLOWER
- F12 - SPARE
- F13 - CLOSE DECON/PRW VALVE
- F14 - STOP DECON FEED/SWITCH TO PRW
- F15 - STOP AGENT FEED
- F16 - S/D SEC BURNER
- F17 - S/D PRI BURNER
- MALFUNCTION

B8:011/

- P17 - SHUTDOWN PFS-COOL-113A FAN B
- P16 - SHUTDOWN PFS-COOL-113A FAN A
- P15 - SHUTDOWN PFS-COOL-113B FAN B
- P14 - SHUTDOWN PFS-COOL-113B FAN A
- P13 - OPEN QUENCH EMERG. PRW
- P12 - S/D WATER RETURN PUMP
- P11 - BKUP BRINE PUMP ON (NOTE 1)
- P10 - BKUP CLEAN LIQ PUMP ON (NOTE 1)
- P07 - SPARE
- P06 - S/D BRINE PUMPS
- P05 - S/D CLEAN LIQUOR PUMPS
- P04 - S/D 1ST & 2ND STAGE ID FAN
- P03 - SPARE
- P02 - BYPASS CARBON FILTER
- P01 - S/D IST STAGE ID FAN
- P00 - S/D 2ND STAGE ID FAN
- PREALARM

ITEM NUM	TAG NUMBER			DESCRIPTION		SET POINT	17	16	15	14	13	12	11	10	07	06	05	04	03	02	01	00	17	16	15	14	13	12	11	10	07	06	05	04	03	02	01	00	PREALARM	REMARKS	ALARM BIT B001:XX/XX	MASK WORD B8:XX
36	24	AAL	091	PAS QUENCH	BRINE pH	7.5 pH																																	X		1850/10	NA
37	24	AALL	091	PAS QUENCH	BRINE pH	7.0 pH			X	X					X																									Alarm is at TOCDF and is in Jan 2000 ANCDF code, but is not shown on PB-6-D-501.	1851/04	76
38	24	XA	094	PAS-PUMP-111	QUENCH BRINE	MALF	X																						X											Switchover to secondary pump on malfunction alarm when PAS-PUMP-111 is selected as primary.	1860/11	NA
39	24	FISL	098	PAS-PUMP-111	SEAL WATER	0.15 gpm																																		3 sec delay. S/D PAS-PUMP-111 if selected as primary, which will cause 24-XA-094 to alarm. SP from instrument data sheet.	1820/00	NA
40	24	LSLLL	099	PAS SCRUBBER	SCRUBBER SUMP	44 in		X	X	X					X																	X								RCRA AWFCO LIC 29. 3 sec delay. Listed in permit as LALL-099. Measured from bottom tangent line. SP from P&ID. Permit SP is 24 in (see NOTE 3). Input to PAS NORMAL relay (see FAWB Note B-19).	1620/00	70
41	24	PAL	100	BRINE PUMP	DISCHARGE	80 psig																							X											SP per DSIC. Switchover to secondary when low pressure and primary is running.	1850/00	NA
42	24	PALL	100	BRINE PUMP	DISCHARGE	40 psig			X	X					X																										1851/12	242
43	24	XA	102	PAS-PUMP-112	QUENCH BRINE	MALF	X																						X											Switchover to secondary pump on malf. alarm when PAS-PUMP-112 is selected as primary.	1862/11	NA
44	24	FISL	106	PAS-PUMP-112	SEAL WATER	0.15 gpm																																		3 sec delay. S/D PAS-PUMP-112 if selected as primary, which will cause 24-XA-102 to alarm. SP from instrument data sheet.	1820/02	NA
45	24	PDAH	108	PAS SCRUBBER	PACKED BED	6 in wc																																	X		1651/10	NA
46	24	PDAH	111	BRINE TO QUENCH	FILTER	10.0 psid																																	X		1450/06	NA
47	24	FAL	112	CLEAN LIQUOR	TO SCRUBBER	SP-10%																																	X	SP = flow setpoint entered in controller by operator. Design flow is 788 gpm.	1650/10	NA
48	24	FALL	112	CLEAN LIQUOR	TO SCRUBBER	766 gpm			X	X					X																									RCRA AWFCO LIC 16. See NOTE 3.	1650/06	146
49	24	LAL	113	PAS SCRUBBER	CLEAN LIQUOR SUMP	24 in																																	X	SP from P&ID (14 ft 0 in. minus 12 ft 0 in. offset). SP is 30 in. above bottom of chimney tray well point. Alarm response per Oct 2000 ANCDF PAS/PFS mtg.	1650/12	100

PBCDF LIQUID INCINERATOR (LIC) POLLUTION ABATEMENT SYSTEM (PAS) AND PAS FILTER SYSTEM (PFS)

PBCDF LIC PAS/PFS

ALARM AND INTERLOCK MATRIX

P&IDs: PB-1-D-526, PB-6-D-501,-502, -507, -517,-523, -535, and -539
PLC: ICS-CONR-114; INTERLOCK: I-7

PBCDF LIC PAS/PFS

F00 - SPARE
F01 - SPARE
F02 - SPARE
F03 - SPARE
F04 - S/D AGENT PUMPS
F05 - LOCKOUT SECONDARY BURNER (NOTE 1)
F06 - LOCKOUT PRIMARY BURNER (NOTE 1)
F07 - INHIBIT FUEL OIL PURGE OF AGENT LINE
F10 - S/D SEC COMB AIR BLOWER
F11 - S/D PRI COMB AIR BLOWER
F12 - SPARE
F13 - CLOSE DECON/PRW VALVE
F14 - STOP DECON FEED/SWITCH TO PRW
F15 - STOP AGENT FEED
F16 - S/D SEC BURNER
F17 - S/D PRI BURNER
MALFUNCTION

P17 - SHUTDOWN PFS-COOL-113A FAN B
P16 - SHUTDOWN PFS-COOL-113A FAN A
P15 - SHUTDOWN PFS-COOL-113B FAN B
P14 - SHUTDOWN PFS-COOL-113B FAN A
P13 - OPEN QUENCH EMERG. PRW
P12 - S/D WATER RETURN PUMP
P11 - BKUP BRINE PUMP ON (NOTE 1)
P10 - BKUP CLEAN LIQ PUMP ON (NOTE 1)
P07 - SPARE
P06 - S/D BRINE PUMPS
P05 - S/D CLEAN LIQUOR PUMPS
P04 - S/D 1ST & 2ND STAGE ID FAN
P03 - SPARE
P02 - BYPASS CARBON FILTER
P01 - S/D IST STAGE ID FAN
P00 - S/D 2ND STAGE ID FAN
PREALARM

ITEM NUM	TAG NUMBER			DESCRIPTION		SET POINT	B8:010/ 17	16	15	14	13	12	11	10	07	06	05	04	03	02	01	00	B8:011/ 17	16	15	14	13	12	11	10	07	06	05	04	03	02	01	00	REMARKS	ALARM BIT B001:XX/XX	MASK WORD B8:XX
50	24	LSHHH	114	PAS SCRUBBER	BRINE SUMP	92 in		X	X	X					X													X												RCRA AWFCO LIC 25. 3 sec delay. Listed in permit as LSHH-114. Measured from bottom tangent line. SP from P&ID. Permit SP is 84 in (see NOTE 3). Input to PAS NORMAL relay (see FAWB Note B-19). See NOTE 4 for additional interlocks.	1620/02	74
51	24	LAH	115	PAS SCRUBBER	BRINE SUMP	80 in																																X	Prealarm per ANCDF Oct 2000 PAS/PFS mtg.	1650/16	74
52	24	LAL	115	PAS SCRUBBER	BRINE SUMP	56 in																																X	Prealarm per ANCDF Oct 2000 PAS/PFS mtg.	1650/14	70
53	24	LSHH	115	PAS SCRUBBER	BRINE SUMP	86 in			X	X					X																								Open 24-DV-083 (deenergize 24-LY-083). Stop feed per RFI C-ANCDF-004.	1621/10	NA
54	24	LSLL	115	PAS SCRUBBER	BRINE SUMP	50 in			X	X					X																								Close 24-DV-083, brine to BRA (24-LY-083 energized and drive 24-DY-083 to close). Stop feed per RFI C-ANCDF-004.	1621/12	NA
55	24	AAH	116	PAS SCRUBBER	CLEAN LIQUOR pH	9.5 pH																																X		1651/02	NA
56	24	AAL	116	PAS SCRUBBER	CLEAN LIQUOR pH	TBD			X	X					X																								RCRA AWFCO LIC 20. No SP in permit. See NOTE 3. Note: AN/UM have AAL prealarm and AALL as RCRA AWFCO. See FAWB Note B-16.	1651/00	TBD
57	24	DAH	117	CLEAN LIQUOR	DENSITY	TBD																																X	Setpoint to be determined.	1651/04	NA
58	24	DAHH	117	CLEAN LIQUOR	DENSITY	1.28 sg			X	X					X																								RCRA AWFCO LIC 24. See NOTE 3.	1651/12	NA
59	24	LAH	132	PAS QUENCH	SUMP	2.0 in																																X	SP from P&ID.	1450/04	NA
60	24	LAHH	132	PAS QUENCH	SUMP	8.0 in		X	X	X					X																								SP from P&ID. Shuts off brine spray to quench tower and PRW makeup to quench brine. Input to PAS NORMAL relay.	1450/02	80
61	24	LAH	143	PAS MIST ELIM.	SUMP	18 in																																	SP per PB-6-D-502. Start PAS-PUMP-136 (see FAWB Note B-17).	0650/02	NA
62	24	LAHH	143	PAS MIST ELIM.	SUMP	20 in																																	SP per PB-6-D-502. Input to PAS NORMAL relay (ref: PBAC1090INS).	0650/10	NA
63	24	LAL	143	PAS MIST ELIM.	SUMP	10 in																																X	SP per PB-6-D-502.	0650/00	NA
64	24	LSLL	144	PAS MIST ELIM.	SUMP	8 in																						X											3 sec delay. SP per PB-6-D-502. Alarm active when 24-HS-143 selected to LIC mist eliminator. Hardwired S/D of pump needs to be disabled when 24-HS-143 is aligned to the spare. (Note 24-HS-143 is not shown on P&ID).	0620/00	82
65	24	LSHH	146	PAS MIST ELIM.	SUMP	66 in																																	Alarm to be deleted by PBAC1090INS.	0620/02	NA

PBCDF LIQUID INCINERATOR (LIC) POLLUTION ABATEMENT SYSTEM (PAS) AND PAS FILTER SYSTEM (PFS)

PBCDF LIC PAS/PFS

ALARM AND INTERLOCK MATRIX

P&IDs: PB-1-D-526, PB-6-D-501,-502, -507, -517,-523, -535, and -539
PLC: ICS-CONR-114; INTERLOCK: I-7

PBCDF LIC PAS/PFS

B8:010/

F00 - SPARE
F01 - SPARE
F02 - SPARE
F03 - SPARE
F04 - S/D AGENT PUMPS
F05 - LOCKOUT SECONDARY BURNER (NOTE 1)
F06 - LOCKOUT PRIMARY BURNER (NOTE 1)
F07 - INHIBIT FUEL OIL PURGE OF AGENT LINE
F10 - S/D SEC COMB AIR BLOWER
F11 - S/D PRI COMB AIR BLOWER
F12 - SPARE
F13 - CLOSE DECON/PRW VALVE
F14 - STOP DECON FEED/SWITCH TO PRW
F15 - STOP AGENT FEED
F16 - S/D SEC BURNER
F17 - S/D PRI BURNER
MALFUNCTION

B8:011/

P17 - SHUTDOWN PFS-COOL-113A FAN B
P16 - SHUTDOWN PFS-COOL-113A FAN A
P15 - SHUTDOWN PFS-COOL-113B FAN B
P14 - SHUTDOWN PFS-COOL-113B FAN A
P13 - OPEN QUENCH EMERG. PRW
P12 - S/D WATER RETURN PUMP
P11 - BKUP BRINE PUMP ON (NOTE 1)
P10 - BKUP CLEAN LIQ PUMP ON (NOTE 1)
P07 - SPARE
P06 - S/D BRINE PUMPS
P05 - S/D CLEAN LIQUOR PUMPS
P04 - S/D 1ST & 2ND STAGE ID FAN
P03 - SPARE
P02 - BYPASS CARBON FILTER
P01 - S/D IST STAGE ID FAN
P00 - S/D 2ND STAGE ID FAN
PREALARM

ITEM NUM	TAG NUMBER	DESCRIPTION	SET POINT	17	16	15	14	13	12	11	10	07	06	05	04	03	02	01	00	17	16	15	14	13	12	11	10	07	06	05	04	03	02	01	00	PREALARM	REMARKS	ALARM BIT B001:XX/XX	MASK WORD B8:XX
66	24 PDAH 147	PAS MIST ELIM. DP AT CANDLES	15 in wc																																	X		0650/04	NA
67	24 PDAHH 147	PAS MIST ELIM. DP AT CANDLES	20 in wc			X	X					X																										0650/12	144
68	24 LAH 161	SPARE MIST ELIM. SUMP	18 in																																		SP per PB-6-D-502 for LAH-143. Start PAS-PUMP-136 (see FAWB Note B-17). Alarm not shown on PB-6-D-502.	0850/02	NA
69	24 LAHH 161	SPARE MIST ELIM. SUMP	20 in																																		SP per PB-6-D-502 for LAHH-143. Alarm not shown on PB-6-D-502. Input to PAS NORMAL relay (ref: PBAC1090INS).	0850/04	NA
70	24 LAL 161	SPARE MIST ELIM. SUMP	10 in																																	X	SP per PB-6-D-502 for LAL-143. Alarm not shown on PB-6-D-502.	0850/00	NA
71	24 LSLL 162	SPARE MIST ELIM. SUMP	8 in																						X												3 sec delay. SP per PB-6-D-502. Alarm active when 24-HS-143 selected to LIC spare mist eliminator. Hardwired S/D of pump needs to be disabled when 24-HS-143 is aligned to the LIC. (Note 24-HS-143 is not shown on P&ID).	0820/00	86
72	24 LSHH 163	SPARE MIST ELIM. SUMP	66 in																																		Alarm to be deleted by PBAC1090INS.	0820/02	NA
73	24 PDAH 164	SPARE MIST ELIM. CANDLES DP	15 in wc																																	X		0850/06	NA
74	24 PDAHH 164	SPARE MIST ELIM. CANDLES DP	20 in wc			X	X					X																										0850/10	148
75	24 FAH 198	PAS-SCRB-103 CAUSTIC ADDITION	3.4 gpm																																	X	SP per RFI S-ALL-232. Note: AN modified SP.	1653/00	NA
76	24 FAL 198	PAS-SCRB-103 CAUSTIC ADDITION	0.1 gpm																																	X	SP per RFI S-ALL-232. Note: AN modified SP.	1652/16	NA
77	24 AAH 210	LIC FLUE GAS TO STACK 02	20% O2			X	X					X																									Instantaneous alarm. Corrected to dry basis. See NOTE 2.	1251/16	92
78	24 XS 210	LIC FLUE GAS TO STACK 02	MALF	X		X	X					X																									Stop feed on malf. alarm only if 13-AIT-229 is also in malf. or is in "calibrate" mode. See NOTE 2.	1220/12 1222/10	36
79	24 TAH 299	CLEAN LIQUOR TO SCRUBBER	128°F																																	X	SP per RFI S-ALL-232.	1652/12	NA
80	24 TAHH 299	CLEAN LIQUOR TO SCRUBBER	143°F			X	X					X																									SP & response per RFI S-ALL-232.	1652/10	NA
81	24 TAL 299	CLEAN LIQUOR TO SCRUBBER	100°F																																	X	SP per RFI S-ALL-232.	1652/14	NA
82	24 XA 320	BRINE/CLEAN LIQ. DENSITY	MALF	X																																	Alarm for MALF signal from 24-XS-117 or 24-XS-083.	TBD	NA
83	24 IAH 388	ID FAN 2ND STAGE MTR	304 amp			X	X					X																								X	2-min delay on startup. SP per RFI S-ALL-232.	1250/02	96
84	24 FSL 391	PAS QUENCH PROCESS WATER	77 gpm																																		3 sec delay. SP from instrument data sheet. Active only when 24-TV-089 is open.	1420/02	NA

PBCDF LIQUID INCINERATOR (LIC) POLLUTION ABATEMENT SYSTEM (PAS) AND PAS FILTER SYSTEM (PFS)

PBCDF LIC PAS/PFS

ALARM AND INTERLOCK MATRIX

P&IDs: PB-1-D-526, PB-6-D-501,-502, -507, -517,-523, -535, and -539

PLC: ICS-CONR-114; INTERLOCK: I-7

PBCDF LIC PAS/PFS

B8:010/

- F00 - SPARE
- F01 - SPARE
- F02 - SPARE
- F03 - SPARE
- F04 - S/D AGENT PUMPS
- F05 - LOCKOUT SECONDARY BURNER (NOTE 1)
- F06 - LOCKOUT PRIMARY BURNER (NOTE 1)
- F07 - INHIBIT FUEL OIL PURGE OF AGENT LINE
- F10 - S/D SEC COMB AIR BLOWER
- F11 - S/D PRI COMB AIR BLOWER
- F12 - SPARE
- F13 - CLOSE DECON/PRW VALVE
- F14 - STOP DECON FEED/SWITCH TO PRW
- F15 - STOP AGENT FEED
- F16 - S/D SEC BURNER
- F17 - S/D PRI BURNER
- MALFUNCTION

B8:011/

- P17 - SHUTDOWN PFS-COOL-113A FAN B
- P16 - SHUTDOWN PFS-COOL-113A FAN A
- P15 - SHUTDOWN PFS-COOL-113B FAN B
- P14 - SHUTDOWN PFS-COOL-113B FAN A
- P13 - OPEN QUENCH EMERG. PRW
- P12 - S/D WATER RETURN PUMP
- P11 - BKUP BRINE PUMP ON (NOTE 1)
- P10 - BKUP CLEAN LIQ PUMP ON (NOTE 1)
- P07 - SPARE
- P06 - S/D BRINE PUMPS
- P05 - S/D CLEAN LIQUOR PUMPS
- P04 - S/D 1ST & 2ND STAGE ID FAN
- P03 - SPARE
- P02 - BYPASS CARBON FILTER
- P01 - S/D IST STAGE ID FAN
- P00 - S/D 2ND STAGE ID FAN
- PREALARM

ITEM NUM	TAG NUMBER	DESCRIPTION	SET POINT	17	16	15	14	13	12	11	10	07	06	05	04	03	02	01	00	17	16	15	14	13	12	11	10	07	06	05	04	03	02	01	00	REMARKS	ALARM BIT B001:XX/XX	MASK WORD B8:XX
85	24 TSHHH 396	PAS QUENCH TWR OVERHEAD TEMP	250°F	X	X	X	X					X																								RCRA AWFCO LIC 22. SP from RCRA permit, PBAC788ICS R1 & PBAP981INS. Input to PAS NORMAL relay. See FAWB Note B-7.	1420/10	98
86	24 TAH 397	PAS QUENCH TWR OVERHEAD TEMP	200°F																																X	SP from PBAP981INS (see FAWB Note B-7)	1450/10	NA
87	24 FSL 398	PAS SCRUBBER PROCESS WATER	20 gpm																																	3 sec delay. SP from instrument data sheet. Active only when 24-XV-092 is energized.	1620/10	NA
88	24 LSLL 411	PAS SCRUBBER CLEAN LIQUOR SUMP	3 in			X	X					X																		X						10 sec delay. SP from P&ID (14 ft 0 in. minus 12 ft 0 in. offset). SP is 9 in. above bottom of chimney tray well point. Alarm response per Oct 2000 ANCDF PAS/PFS mtg.	1620/12	100
89	24 FSL 438	PAS SCRUBBER PURGE PERMISS	1200 scfm																																X	15 sec delay. SP from instrument data sheet.	1620/14	NA
90	24 FSLL 438	PAS SCRUBBER NFPA BURN S/D	650 scfm			X	X					X	X	X																						3 sec delay for stop feed. SP from instrument data sheet. BMS 3-P running interlock.	1620/16	88
91	24 TSH 450A/B	1st STAGE ID FAN BEARING TEMP	160°F			X	X					X																								SP from vendor info. PB-6-D-517 specifies stop feed.	1251/02	NA
92	24 TSHH 450A/B	1st STAGE ID FAN BEARING TEMP	200°F																														X			SP from vendor info. PB-6-D-517 Note 14 specifies S/D 1st stage, except when running in emergency mode.	1221/10	122
93	24 TSH 451A/B	2nd STAGE ID FAN BEARING TEMP	160°F			X	X					X																								SP from vendor info. PB-6-D-517 specifies stop feed.	1251/10	NA
94	24 TSHH 451A/B	2nd STAGE ID FAN BEARING TEMP	200°F																															X		SP from vendor info. PB-6-D-517 Note 14 specifies S/D 2nd stage, except when running in emergency mode.	1221/12	138
95	24 PSH 505	ID FAN 1ST STG SUCTN	- 10 in wc																																X	SP from instrument data sheet.	1223/02	NA
96	24 PDAH 583	PAS SCRUBBER CLEAN LIQ FIL	10 psid																																X		1650/02	NA
97	24 XA 777	1st STAGE ID FAN TROUBLE	Trouble			X	X					X																					X			Alarm response per RFI C-ANCDF-002. Trouble alarm initiated by ASD motor thermal overload which stops the motor.	1223/04	TBD
98	24 SAH 777A	1st STAGE ID FAN SPEED	1800 rpm			X	X					X																					X			SP per RFI S-ALL-232.	1250/14	TBD
99	24 TSH 980A-F	1st STAGE ID FAN WINDING TEMP	320°F			X	X					X																								SP from vendor info. Alarm on high temp for any of 24-TSH-980A through F. Stop feed per PB-6-D-517 Note 13.	1220/10	NA

PBCDF LIQUID INCINERATOR (LIC) POLLUTION ABATEMENT SYSTEM (PAS) AND PAS FILTER SYSTEM (PFS)

PBCDF LIC PAS/PFS

ALARM AND INTERLOCK MATRIX

P&IDs: PB-1-D-526, PB-6-D-501,-502, -507, -517,-523, -535, and -539

PLC: ICS-CONR-114; INTERLOCK: I-7

PBCDF LIC PAS/PFS

B8:010/

- 17 = F00 - SPARE
- 16 = F01 - SPARE
- 15 = F02 - SPARE
- 14 = F03 - SPARE
- 13 = F04 - S/D AGENT PUMPS
- 12 = F05 - LOCKOUT SECONDARY BURNER (NOTE 1)
- 11 = F06 - LOCKOUT PRIMARY BURNER (NOTE 1)
- 10 = F07 - INHIBIT FUEL OIL PURGE OF AGENT LINE
- 07 = F10 - S/D SEC COMB AIR BLOWER
- 06 = F11 - S/D PRI COMB AIR BLOWER
- 05 = F12 - SPARE
- 04 = F13 - CLOSE DECON/PRW VALVE
- 03 = F14 - STOP DECON FEED/SWITCH TO PRW
- 02 = F15 - STOP AGENT FEED
- 01 = F16 - S/D SEC BURNER
- 00 = F17 - S/D PRI BURNER

B8:011/

- 17 = P17 - SHUTDOWN PFS-COOL-113A FAN B
- 16 = P16 - SHUTDOWN PFS-COOL-113A FAN A
- 15 = P15 - SHUTDOWN PFS-COOL-113B FAN B
- 14 = P14 - SHUTDOWN PFS-COOL-113B FAN A
- 13 = P13 - OPEN QUENCH EMERG. PRW
- 12 = P12 - S/D WATER RETURN PUMP
- 11 = P11 - BKUP BRINE PUMP ON (NOTE 1)
- 10 = P10 - BKUP CLEAN LIQ PUMP ON (NOTE 1)
- 07 = P07 - SPARE
- 06 = P06 - S/D BRINE PUMPS
- 05 = P05 - S/D CLEAN LIQUOR PUMPS
- 04 = P04 - S/D 1ST & 2ND STAGE ID FAN
- 03 = P03 - SPARE
- 02 = P02 - BYPASS CARBON FILTER
- 01 = P01 - S/D IST STAGE ID FAN
- 00 = P00 - S/D 2ND STAGE ID FAN

MALFUNCTION

PREALARM

ITEM NUM	TAG NUMBER	DESCRIPTION	SET POINT	17	16	15	14	13	12	11	10	07	06	05	04	03	02	01	00	17	16	15	14	13	12	11	10	07	06	05	04	03	02	01	00	REMARKS	ALARM BIT B001:XX/XX	MASK WORD B8:XX
100	24 TSHH 980A-F	1st STAGE ID FAN WINDING TEMP	329°F																															X		SP from vendor info. Alarm on high-high temp for any of 24-TSHH-980A through F. PB-6-D-517 Note 14 specifies S/D 1st stage, except when running in emergency mode.	1221/16	110
101	24 IAH 981	ID FAN 1ST STAGE MTR	304 amp			X	X					X																						X		2-min delay on startup. SP per RFI S-ALL-232.	1250/04	112
102	24 XAH 982	1st STAGE ID FAN VIBRATION	0.25 in/sec			X	X					X																								3 sec delay. See NOTE 6.	1251/00	TBD
103	24 XSHH 982	1st STAGE ID FAN VIBRATION	0.5 in/sec																															X		3 sec delay.S/D 1st stage, except when running in emergency mode. See NOTE 6.	1222/00	114
104	24 XA 983	ID FAN 1ST STAGE MTR	MALF	X		X	X					X																						X		Start I-lock for 1st stage motor.	1261/11	118
105	24 FISL 994	PAS MIST ELIM WTR RTN PMP SEAL	0.15 gpm																						X											3 sec delay. SP from instrument data sheet.	0620/12	NA
106	114 TAH 207	PFS-COOL-113B CLEAN LIQ COOLER	135°F																																X	SP per RFI S-ALL-232.	3050/16	NA
107	114 TAL 207	PFS-COOL-113B CLEAN LIQ COOLER	100°F																			X	X													SP per RFI S-ALL-232. Instant alarm, 120-sec delay for cooler S/D (see FAWB Note B-20).	3050/14	NA
108	114 XSH 208	PFS-COOL-113B FAN B VIBRATION	See NOTE 7																																X	5 sec delay (vendor info shows additional hardwired startup time delay relay)	3020/06	NA
109	114 XSHH 209	PFS-COOL-113B FAN B VIBRATION	See NOTE 7																			X														5 sec delay (vendor info shows additional hardwired startup time delay relay)	3020/16	NA
110	114 XSH 210	PFS-COOL-113B FAN A VIBRATION	See NOTE 7																																X	5 sec delay (vendor info shows additional hardwired startup time delay relay)	3020/04	NA
111	114 XSHH 211	PFS-COOL-113B FAN A VIBRATION	See NOTE 7																				X													5 sec delay (vendor info shows additional hardwired startup time delay relay)	3020/14	NA
112	114 SAH 212A	PFS-COOL-113B FAN B SPEED	66 Hz																			X														SP per RFI S-ALL-232 (66Hz = 1980 rpm).	3051/06	NA
113	114 SAH 213A	PFS-COOL-113B FAN A SPEED	66 Hz																				X													SP per RFI S-ALL-232 (66Hz = 1980 rpm).	3051/04	NA
114	114 XA 217	PFS-COOL-113B FAN B	TROUBLE																			X														On time delay. Alarm generated by XSHH-209 or VFD in fault lockout. VFD internally configured to stop motor (see RFI C-PBCDF-002).	3021/06	NA
115	114 XA 219	PFS-COOL-113B FAN A	TROUBLE																				X													On time delay. Alarm generated by XSHH-211 or VFD in fault lockout. VFD internally configured to stop motor (see RFI C-PBCDF-002).	3021/04	NA
116	114 XSH 224	PFS-COOL-113A FAN B VIBRATION	See NOTE 7																																X	5 sec delay (vendor info shows additional hardwired startup time delay relay)	3020/02	NA
117	114 XSHH 225	PFS-COOL-113A FAN B VIBRATION	See NOTE 7																	X																5 sec delay (vendor info shows additional hardwired startup time delay relay)	3020/12	NA
118	114 XSH 226	PFS-COOL-113A FAN A VIBRATION	See NOTE 7																																X	5 sec delay (vendor info shows additional hardwired startup time delay relay)	3020/00	NA

PBCDF LIQUID INCINERATOR (LIC) POLLUTION ABATEMENT SYSTEM (PAS) AND PAS FILTER SYSTEM (PFS)

PBCDF LIC PAS/PFS

ALARM AND INTERLOCK MATRIX

P&IDs: PB-1-D-526, PB-6-D-501,-502, -507, -517,-523, -535, and -539

PLC: ICS-CONR-114; INTERLOCK: I-7

PBCDF LIC PAS/PFS

B8:010/

- F00 - SPARE
- F01 - SPARE
- F02 - SPARE
- F03 - SPARE
- F04 - S/D AGENT PUMPS
- F05 - LOCKOUT SECONDARY BURNER (NOTE 1)
- F06 - LOCKOUT PRIMARY BURNER (NOTE 1)
- F07 - INHIBIT FUEL OIL PURGE OF AGENT LINE
- F10 - S/D SEC COMB AIR BLOWER
- F11 - S/D PRI COMB AIR BLOWER
- F12 - SPARE
- F13 - CLOSE DECON/PRW VALVE
- F14 - STOP DECON FEED/SWITCH TO PRW
- F15 - STOP AGENT FEED
- F16 - S/D SEC BURNER
- F17 - S/D PRI BURNER
- MALFUNCTION

B8:011/

- P17 - SHUTDOWN PFS-COOL-113A FAN B
- P16 - SHUTDOWN PFS-COOL-113A FAN A
- P15 - SHUTDOWN PFS-COOL-113B FAN B
- P14 - SHUTDOWN PFS-COOL-113B FAN A
- P13 - OPEN QUENCH EMERG. PRW
- P12 - S/D WATER RETURN PUMP
- P11 - BKUP BRINE PUMP ON (NOTE 1)
- P10 - BKUP CLEAN LIQ PUMP ON (NOTE 1)
- P07 - SPARE
- P06 - S/D BRINE PUMPS
- P05 - S/D CLEAN LIQUOR PUMPS
- P04 - S/D 1ST & 2ND STAGE ID FAN
- P03 - SPARE
- P02 - BYPASS CARBON FILTER
- P01 - S/D IST STAGE ID FAN
- P00 - S/D 2ND STAGE ID FAN
- PREALARM

ITEM NUM	TAG NUMBER	DESCRIPTION	SET POINT	17	16	15	14	13	12	11	10	07	06	05	04	03	02	01	00	17	16	15	14	13	12	11	10	07	06	05	04	03	02	01	00	PREALARM	REMARKS	ALARM BIT B001:XX/XX	MASK WORD B8:XX
119	114 XSHH 227	PFS-COOL-113A FAN A VIBRATION	See NOTE 7																		X																5 sec delay (vendor info shows additional hardwired startup time delay relay)	3020/10	NA
120	114 SAH 228A	PFS-COOL-113A FAN B SPEED	66 Hz																	X																	SP per RFI S-ALL-232 (66Hz = 1980 rpm).	3051/02	NA
121	114 SAH 229A	PFS-COOL-113A FAN A SPEED	66 Hz																		X																SP per RFI S-ALL-232 (66Hz = 1980 rpm).	3051/00	NA
122	114 XA 233	PFS-COOL-113A FAN B	TROUBLE																	X																	On time delay. Alarm generated by XSHH-225 or VFD in fault lockout. VFD internally configured to stop motor (see RFI C-PBCDF-002).	3021/02	NA
123	114 XA 235	PFS-COOL-113A FAN A	TROUBLE																		X																On time delay. Alarm generated by XSHH-227 or VFD in fault lockout. VFD internally configured to stop motor (see RFI C-PBCDF-002).	3021/00	NA
124	114 TAH 240	PFS-COOL-113A CLEAN LIQ COOLER	135°F																																	X	SP per RFI S-ALL-232.	3050/12	NA
125	114 TAL 240	PFS-COOL-113A CLEAN LIQ COOLER	100°F																	X	X																SP per RFI S-ALL-232. Instant alarm, 120-sec delay for cooler S/D (see FAWB Note B-20).	3050/10	NA
126	114 PDAH 252	PFS-COOL-113B CLEAN LIQ COOLER	20 psid																																	X	SP per RFI S-ALL-232.	3050/06	NA
127	114 PDAL 252	PFS-COOL-113B CLEAN LIQ COOLER	8 psid																																	X	SP per RFI S-ALL-232.	3050/04	NA
128	114 PDAH 253	PFS-COOL-113A CLEAN LIQ COOLER	20 psid																																	X	SP per RFI S-ALL-232.	3050/02	NA
129	114 PDAL 253	PFS-COOL-113A CLEAN LIQ COOLER	8 psid																																	X	SP per RFI S-ALL-232.	3050/00	NA
130	114 XA 322	CLEAN LIQ PUMP A (PFS-PUMP-134)	MALF	X																							X										Switchover to secondary pump on malf. alarm when PFS-PUMP-134 is selected as primary.	1660/11	NA
131	114 FISL 324	CLEAN LIQ PUMP A SEAL WATER	0.15 gpm																																		3 sec delay. S/D PFS-PUMP-134 if selceted as primary, which will cause 114-XA-322 to alarm. SP from instrument data sheet.	1620/04	NA
132	114 XA 328	CLEAN LIQ PUMP B (PFS-PUMP-135)	MALF	X																							X										Switchover to secondary pump on malf. alarm when PFS-PUMP-135 is selected as primary.	1662/11	NA
133	114 PAL 329	CLEAN LIQ PUMP DISCH PRESS	50 psig																								X										10 sec delay after pump startup. 3 sec delay before S/D of primary pump. SP per DSIC. Response per Oct 2000 AN PAS/PFS review mtg.	1650/00	230
134	114 PALL 329	CLEAN LIQ PUMP DISCH PRESS	30 psig			X	X					X								X	X	X	X							X							RCRA AWFCO LIC 21. 10 sec delay after pump startup. SP per DSIC. Response per Oct 2000 ANCDF PAS/PFS review mtg. Listed in permit as PALL-129.	1650/04	142
135	114 FISL 331	CLEAN LIQ PUMP B SEAL WATER	0.15 gpm																																		3 sec delay. S/D PFS-PUMP-135 if selceted as primary, which will cause 114-XA-328 to alarm. SP from instrument data sheet.	1620/06	NA

PBCDF LIQUID INCINERATOR (LIC) POLLUTION ABATEMENT SYSTEM (PAS) AND PAS FILTER SYSTEM (PFS)

PBCDF LIC PAS/PFS

ALARM AND INTERLOCK MATRIX

P&IDs: PB-1-D-526, PB-6-D-501,-502, -507, -517,-523, -535, and -539

PLC: ICS-CONR-114; INTERLOCK: I-7

PBCDF LIC PAS/PFS

B8:010/

- F00 - SPARE
- F01 - SPARE
- F02 - SPARE
- F03 - SPARE
- F04 - S/D AGENT PUMPS
- F05 - LOCKOUT SECONDARY BURNER (NOTE 1)
- F06 - LOCKOUT PRIMARY BURNER (NOTE 1)
- F07 - INHIBIT FUEL OIL PURGE OF AGENT LINE
- F10 - S/D SEC COMB AIR BLOWER
- F11 - S/D PRI COMB AIR BLOWER
- F12 - SPARE
- F13 - CLOSE DECON/PRW VALVE
- F14 - STOP DECON FEED/SWITCH TO PRW
- F15 - STOP AGENT FEED
- F16 - S/D SEC BURNER
- F17 - S/D PRI BURNER
- MALFUNCTION

B8:011/

- P17 - SHUTDOWN PFS-COOL-113A FAN B
- P16 - SHUTDOWN PFS-COOL-113A FAN A
- P15 - SHUTDOWN PFS-COOL-113B FAN B
- P14 - SHUTDOWN PFS-COOL-113B FAN A
- P13 - OPEN QUENCH EMERG. PRW
- P12 - S/D WATER RETURN PUMP
- P11 - BKUP BRINE PUMP ON (NOTE 1)
- P10 - BKUP CLEAN LIQ PUMP ON (NOTE 1)
- P07 - SPARE
- P06 - S/D BRINE PUMPS
- P05 - S/D CLEAN LIQUOR PUMPS
- P04 - S/D 1ST & 2ND STAGE ID FAN
- P03 - SPARE
- P02 - BYPASS CARBON FILTER
- P01 - S/D IST STAGE ID FAN
- P00 - S/D 2ND STAGE ID FAN
- PREALARM

ITEM NUM	TAG NUMBER	DESCRIPTION	SET POINT	17	16	15	14	13	12	11	10	07	06	05	04	03	02	01	00	17	16	15	14	13	12	11	10	07	06	05	04	03	02	01	00	REMARKS	ALARM BIT B001:XX/XX	MASK WORD B8:XX
136	114 PDAH 454A	PFS-FILT-109 PREFILTER BANK	2.0 in wc																																X	SP per RFI S-ALL-232.	3250/00	NA
137	114 PDAHH 454A	PFS-FILT-109 PREFILTER BANK	10 in wc		X																															RCRA AWFCO LIC 33. Listed in permit as PDAH-663A. See NOTE 3. Tag # recommended by DSIC and is not shown on PB-6-D-523.	TBD	TBD
138	114 PDAH 454B	PFS-FILT-109 1st HEPA FILTER BANK	4.0 in wc																																X	SP per RFI S-ALL-232.	3250/02	NA
139	114 PDAHH 454B	PFS-FILT-109 1st HEPA FILTER BANK	10 in wc		X																															RCRA AWFCO LIC 34. Listed in permit as PDAH-663B. See NOTE 3. Tag # recommended by DSIC and is not shown on PB-6-D-523.	TBD	TBD
140	114 PDAH 454C	PFS-FILT-109 1st CARBON FILT BANK	3.5 in wc																																X	SP per RFI S-ALL-232.	3250/04	NA
141	114 PDAH 454D	PFS-FILT-109 2nd CARBON FILT BANK	3.5 in wc																																X	SP per RFI S-ALL-232.	3250/06	NA
142	114 PDAH 454E	PFS-FILT-109 2nd HEPA FILTER BANK	4.0 in wc																																X	SP per RFI S-ALL-232.	3250/10	NA
143	114 PDAH 454F	PFS-FILT-109 OVERALL DP	16 in wc																																X	SP per RFI S-ALL-232.	3250/12	NA
144	114 TISH 460	PFS-BURN-101 EXHAUST TEMP	168°F																																X	On time delay. SP per DSIC.	3220/12	NA
145	114 TSHH 460	PFS-BURN-101 EXHAUST TEMP	176°F																																	On time delay. S/D PFS-BURN-101. SP per DSIC.	3220/14	NA
146	114 XA 483	PFS-BURN-101 BURNER TROUBLE S/D	LOCKOUT			X	X					X																								Stop feed per PB-6-D-535.	3221/00	TBD
147	114 TAH 518	PFS-BURN-101 EXHAUST TEMP	172°F																																X	SP per RFI S-ALL-241 R1.	3251/14	NA
148	114 TAL 518	PFS-BURN-101 EXHAUST TEMP	135°F																																X	SP per RFI S-ALL-241 R1.	3251/16	NA
149	114 TSHH 533	PFS-BURN-101 EXHAUST TEMP	180°F			X	X					X																					X			Stop feed & bypass filter per Note 3 on PB-6-D-535. RCRA AWFCO LIC 35 refers to TAH-103 for carbon filter system gas temperature high.	3220/10	TBD
150	114 XA 534	PFS-BURN-101 EXH MOIST ANALYZER	> 10% DIFF																																X	Alarm when MIT-434A & B deviation exceeds 10% of upper range value based on ROHA.	3252/00	NA
151	114 MAH 534A	PFS-BURN-101 EXH RELATIVE HUMIDITY	60%RH																																X	Instantaneous alarm. See NOTE 8.	3251/10	TBD
152	114 MSHH 534A	PFS-BURN-101 EXH RELATIVE HUMIDITY	80%RH			X	X					X																								RCRA AWFCO LIC 36. Instantaneous alarm. Listed in RCRA permit as MAH-104B. See NOTE 8.	3220/00	TBD
153	114 XS 534A	PFS-BURN-101 EXH MOIST ANALYZER	MALF	X		X	X					X																								On time delay. Remove instrument from ROHA calculation if it is the active unit. See NOTE 8.	3220/04	TBD
154	114 MAH 534B	PFS-BURN-101 EXH RELATIVE HUMIDITY	60%RH																																	Instantaneous alarm. See NOTE 8.	3251/12	TBD
155	114 MSHH 534B	PFS-BURN-101 EXH RELATIVE HUMIDITY	80%RH			X	X					X																								RCRA AWFCO LIC 36. Instantaneous alarm. Listed in RCRA permit as MAH-104B. See NOTE 8.	3220/02	TBD
156	114 XS 534B	PFS-BURN-101 EXH MOIST ANALYZER	MALF	X		X	X					X																								On time delay. Remove instrument from ROHA calculation if it is the active unit. See NOTE 8.	3220/06	TBD

PBCDF LIQUID INCINERATOR (LIC) POLLUTION ABATEMENT SYSTEM (PAS) AND PAS FILTER SYSTEM (PFS)

PBCDF LIC PAS/PFS

ALARM AND INTERLOCK MATRIX

P&IDs: PB-1-D-526, PB-6-D-501,-502, -507, -517,-523, -535, and -539

PLC: ICS-CONR-114; INTERLOCK: I-7

PBCDF LIC PAS/PFS

F00 - SPARE
F01 - SPARE
F02 - SPARE
F03 - SPARE
F04 - S/D AGENT PUMPS
F05 - LOCKOUT SECONDARY BURNER (NOTE 1)
F06 - LOCKOUT PRIMARY BURNER (NOTE 1)
F07 - INHIBIT FUEL OIL PURGE OF AGENT LINE
F10 - S/D SEC COMB AIR BLOWER
F11 - S/D PRI COMB AIR BLOWER
F12 - SPARE
F13 - CLOSE DECON/PRW VALVE
F14 - STOP DECON FEED/SWITCH TO PRW
F15 - STOP AGENT FEED
F16 - S/D SEC BURNER
F17 - S/D PRI BURNER
MALFUNCTION

P17 - SHUTDOWN PFS-COOL-113A FAN B
P16 - SHUTDOWN PFS-COOL-113A FAN A
P15 - SHUTDOWN PFS-COOL-113B FAN B
P14 - SHUTDOWN PFS-COOL-113B FAN A
P13 - OPEN QUENCH EMERG. PRW
P12 - S/D WATER RETURN PUMP
P11 - BKUP BRINE PUMP ON (NOTE 1)
P10 - BKUP CLEAN LIQ PUMP ON (NOTE 1)
P07 - SPARE
P06 - S/D BRINE PUMPS
P05 - S/D CLEAN LIQUOR PUMPS
P04 - S/D 1ST & 2ND STAGE ID FAN
P03 - SPARE
P02 - BYPASS CARBON FILTER
P01 - S/D IST STAGE ID FAN
P00 - S/D 2ND STAGE ID FAN
PREALARM

ITEM NUM	TAG NUMBER	DESCRIPTION	SET POINT	B8:010/ 17	16	15	14	13	12	11	10	07	06	05	04	03	02	01	00	B8:011/ 17	16	15	14	13	12	11	10	07	06	05	04	03	02	01	00	REMARKS	ALARM BIT B001:XX/XX	MASK WORD B8:XX
157	114 MAH 534C	PFS-BURN-101 EXH REL HUMIDITY	52%RH																																X	ROHA. See NOTE 8.	TBD	NA
158	114 MSHH 534C	PFS-BURN-101 EXH REL HUMIDITY	55%RH			X	X					X																								ROHA. See NOTE 8.	TBD	NA
159	114 ZS 550B	PFS-FILT-109 BYPASS DAMPER	NOT CLOSED			X	X					X																								RCRA AWFCO LIC 37. Agent feed permissive per PB-6-D-535 Note 4. Listed in permit as TV-103B with setpoint "OPEN."	TBD	TBD
160	MON ACAM 129	ACAMS COMMON STACK	NOTE 5			X	X					X																								RCRA AWFCO LIC 18. See NOTE 3. Stop feed for DFS, LIC, & MPF. DICO from ICS-CONR-112.	B4:31/00	140
161	MON ACAM 129	ACAMS COMMON STACK	MALF	X		X	X					X																								RCRA AWFCO LIC 18. See NOTE 3. Stop feed for DFS, LIC, & MPF. DICO from ICS-CONR-112.	B4:31/00	140
162	MON ACAM 129	ACAMS COMMON STACK	OFFLINE			X	X					X																								RCRA AWFCO LIC 18. See NOTE 3. Stop feed for DFS, LIC, & MPF. DICO from ICS-CONR-112.	B4:31/00	140
163	MON ACAM 129	ACAMS COMMON STACK	NOT STAGGERED			X	X					X																								RCRA AWFCO LIC 18. See NOTE 3. Stop feed for DFS, LIC, & MPF. DICO from ICS-CONR-112.	B4:31/00	140
164	MON ACAM 163	ACAMS LIC PAS	NOTE 5			X	X					X																								RCRA AWFCO LIC 17. See NOTE 3.	2420/06	90
165	MON ACAM 163	ACAMS LIC PAS	MALF	X		X	X					X																								RCRA AWFCO LIC 17. See NOTE 3.	2420/06	90
166	MON ACAM 163	ACAMS LIC PAS	OFFLINE			X	X					X																								RCRA AWFCO LIC 17. See NOTE 3.	2420/06	90
167		BRA TANKS LVL HI-HI / UNAVAILABLE	DICO			X	X					X																								RCRA AWFCO LIC 19. See BRA FAWB for tag #s and setpoints.	B4:23/01	210
168		LIC PAS/PFS NORMAL	NOT NORMAL			X	X					X																									B601/00	252

NOTE 1: F05, F06, P02, P10, P11, P13, P14, P15, P16, and P17 responses are not part of the deathwish relay. These responses are included as column headings for presentation clarity.
NOTE 2: The PBCDF CEMS alarm configuration is based on the response to RFI S-ALL-249 and does not reflect the configuration shown on the referenced versions of the P&IDs.
NOTE 3: RCRA AWFCO setpoints from 1-15-99 PBCDF RCRA permit Table VII-11 - Liquid Incinerator Waste-Feed Cutoff Parameters. Some setpoints may be modified based on trial burn results.
NOTE 4: 24-LSHHH-114 additional interlocks: 1) close 24-XV-062, 2) close 24-XV-092 and inhibit timer activation, 3) close 24-XY-413B/D. Also when controllers are in AUTO, 1) close 24-LV-113, 2) close 24-LV-115, 3) close 24-AV-116, 4) close 24-AV-091.
NOTE 5: ACAMS RCRA AWFCO setpoints are 1 ASC (allowable stack concentration), which are (mg/m3) : GB= 0.0003, HD/HT= 0.03, and VX=0.0003.
NOTE 6: PAS exhaust blower vibration alarms reflect the current design. Per RFI C-ANCDF-005, the blower foundation design requires that the foundation vibration be < 1 mil double amplitude. This requirment was the basis for recommended setpoints in RFI S-ALL-0232. The vibration alarm setpoints may be changed, or new alarms added, to meet the foundation vibration design limits.
NOTE 7: After the Oct 2000 AN PAS/PFS review meeting, the DSIC investigated the clean liquor air cooler vibration alarm setpoints. They found that the Murphy vibration switches are set by turning an uncalibrated screw. Specific vibration units could not be determined. The high vibration switch is set by turning the screw 1/4 turn past its start-up trip point and the high-high switch is set by turning the screw 1/2 turn past its start-up trip point.
NOTE 8: At the Oct 2000 ANCDF PAS/PFS review meetings, the ANCDF PFS gas reheater exhaust moisture alarm configuration was modified. These changes have been incorporated in the ANCDF design. The changes are also being carried forward to PBCDF, but have not yet been implemented. Therefore, the moisture alarms listed in this matrix reflect the ANCDF design configuration and do not match the PBCDF design documentation.

PBCDF METAL PARTS FURNACE (MPF) POLLUTION ABATEMENT SYSTEM (PAS) AND PAS FILTER SYSTEM (PFS)

PBCDF MPF PAS/PFS

ALARM AND INTERLOCK MATRIX

P&IDs: PB-1-D-528, PB-6-D-504, -505, -523, -526, -527 and -528
PLC: ICS-CONR-113; INTERLOCK: I-8

PBCDF MPF PAS/PFS

B8:010/

F00 - SPARE
F01 - SPARE
F02 - S/D COOLING CONVEYOR
F03 - S/D UNLOAD CONVEYOR
F04 - STOP ZONE 1 TIMER
F05 - STOP ZONE 2 TIMER
F06 - STOP ZONE 3 TIMER
F07 - S/D DISCHARGE AIRLOCK CONVEYOR
F10 - S/D ZONE 3 CONVEYOR
F11 - S/D ZONE 2 CONVEYOR
F12 - S/D ZONE 1 CONVEYOR
F13 - S/D CHARGE AIRLOCK CONVEYOR
F14 - S/D COMBUSTION AIR BLOWER
F15 - S/D RESPECTIVE MPF AFTERBURNER
F16 - S/D RESPECTIVE MPF BURNER
F17 - STOP FEED

B8:011/

P17 - S/D PFS-COOL-114A FAN B (NOTE 1)
P16 - S/D PFS-COOL-114A FAN A (NOTE 1)
P15 - S/D PFS-COOL-114B FAN B (NOTE 1)
P14 - S/D PFS-COOL-114B FAN A (NOTE 1)
P13 - OPEN QUENCH EMERG. PRW (NOTE 1)
P12 - S/D WATER RETURN PUMP
P11 - BKUP BRINE PUMP ON (NOTE 1)
P10 - BKUP CLEAN LIQ PUMP ON (NOTE 1)
P07 - SPARE
P06 - S/D BRINE PUMPS
P05 - S/D CLEAN LIQUOR PUMPS
P04 - S/D 1ST & 2ND STAGE ID FAN
P03 - SPARE
P02 - BYPASS CARBON FILTER (NOTE 1)
P01 - S/D IST STAGE ID FAN
P00 - S/D 2ND STAGE ID FAN

MALFUNCTION | PREALARM

ITEM NUM	TAG NUMBER	DESCRIPTION	SET POINT	MALF	17	16	15	14	13	12	11	10	07	06	05	04	03	02	01	00	17	16	15	14	13	12	11	10	07	06	05	04	03	02	01	00	PREALARM	REMARKS	ALARM BIT B001:XX/XX	MASK WORD B8:XX
1	14 AAH 081	AFB EXHAUST O2 ANALYZER	14% O2																																		X	ROHA prealarm. Corrected to dry basis. See NOTE 2.	TBD	NA
2	14 AAH 081	AFB EXHAUST O2 ANALYZER	20% O2		X																																	Instantaneous alarm. Corrected to dry basis. See NOTE 2.	TBD	TBD
3	14 AAHH 081	AFB EXHAUST O2 ANALYZER	15% O2		X																																	RCRA AWFCO MPF 25. ROHA. Corrected to dry basis. See NOTEs 1 & 2 (Listed in permit as 24-AAH-082).	TBD	TBD
4	14 AAL 081	AFB EXHAUST O2 ANALYZER	4% O2																																		X	ROHA prealarm. Corrected to dry basis. See NOTE 2.	TBD	NA
5	14 AAL 081	AFB EXHAUST O2 ANALYZER	2% O2		X																																	Instantaneous alarm. Corrected to dry basis. See NOTE 2.	TBD	TBD
6	14 AALL 081	AFB EXHAUST O2 ANALYZER	3% O2		X																																	RCRA AWFCO MPF 26. ROHA. Corrected to dry basis. See NOTEs 1 & 2. (Listed in ECP as 24-AAL-082).	1020/00	378
7	14/24 HS 081A/670A	BOTH MPF PAS O2 ANALYZERS IN CAL	In Calib		X																																	See NOTE 2.	1223/00	516
8	14 XS 081	AFB EXHAUST O2 ANALYZER	MALF	X	X																																	Stop feed on malf. alarm only if 24-AIT-670 is also in malf. or is in "calibrate" mode. See NOTE 2.	1021/00 1222/14	TBD
9	14 AAH 082	AFB EXHAUST O2 ANALYZER	9% O2																																			Alarm active during MPF emergency restart only. See NOTE 2.	TBD	NA
10	14 AAL 082	AFB EXHAUST O2 ANALYZER	5% O2																																			Alarm active during MPF emergency restart only. See NOTE 2.	TBD	NA
11	14 AAH 384	AFB EXHAUST CO ANALYZER	90 ppm																																		X	ROHA prealarm. Corrected to 7% O2 dry basis. See NOTE 2.	TBD	NA
12	14 AAHH 384	AFB EXHAUST CO ANALYZER	160 ppm		X																																	Instantaneous alarm. Corrected to 7% O2 dry basis. See NOTE 2.	TBD	TBD
13	14 AAHH 384	AFB EXHAUST CO ANALYZER	100 ppm		X																																	RCRA AWFCO MPF 13. ROHA. Corrected to 7% O2 dry basis. See NOTEs 1 & 2.	1050/12	400
14	14/24 HS 384A/669A	BOTH MPF PAS CO ANALYZERS IN CAL	In Calib		X																																	See NOTE 2.	1222/06 1223/02	518
15	14 XS 384	AFB EXHAUST CO ANALYZER	MALF	X	X																																	Stop feed on malf. alarm only if 24-AIT-669 is also in malf. or is in "calibrate" mode. Alarm active only when combined fuel flow to primary and secondary > 100 scfm. See NOTE 2.	1021/02 1222/16	TBD
16	24 PDAH 053	MPF/DFS SPARE MIST ELIM DP AT CANDLES	15 in wc																																		X		5250/06	NA

PBCDF METAL PARTS FURNACE (MPF) POLLUTION ABATEMENT SYSTEM (PAS) AND PAS FILTER SYSTEM (PFS)

PBCDF MPF PAS/PFS

ALARM AND INTERLOCK MATRIX

PBCDF MPF PAS/PFS

P&IDs: PB-1-D-528, PB-6-D-504, -505, -523, -526, -527 and -528
PLC: ICS-CONR-113; INTERLOCK: I-8

B8:010/

17	16	15	14	13	12	11	10	07	06	05	04	03	02	01	00
F00 - SPARE	F01 - SPARE	F02 - S/D COOLING CONVEYOR	F03 - S/D UNLOAD CONVEYOR	F04 - STOP ZONE 1 TIMER	F05 - STOP ZONE 2 TIMER	F06 - STOP ZONE 3 TIMER	F07 - S/D DISCHARGE AIRLOCK CONVEYOR	F10 - S/D ZONE 3 CONVEYOR	F11 - S/D ZONE 2 CONVEYOR	F12 - S/D ZONE 1 CONVEYOR	F13 - S/D CHARGE AIRLOCK CONVEYOR	F14 - S/D COMBUSTION AIR BLOWER	F15 - S/D RESPECTIVE MPF AFTERBURNER	F16 - S/D RESPECTIVE MPF BURNER	F17 - STOP FEED

B8:011/

17	16	15	14	13	12	11	10	07	06	05	04	03	02	01	00
P17 - S/D PFS-COOL-114A FAN B (NOTE 1)	P16 - S/D PFS-COOL-114A FAN A (NOTE 1)	P15 - S/D PFS-COOL-114B FAN B (NOTE 1)	P14 - S/D PFS-COOL-114B FAN A (NOTE 1)	P13 - OPEN QUENCH EMERG. PRW (NOTE 1)	P12 - S/D WATER RETURN PUMP	P11 - BKUP BRINE PUMP ON (NOTE 1)	P10 - BKUP CLEAN LIQ PUMP ON (NOTE 1)	P07 - SPARE	P06 - S/D BRINE PUMPS	P05 - S/D CLEAN LIQUOR PUMPS	P04 - S/D 1ST & 2ND STAGE ID FAN	P03 - SPARE	P02 - BYPASS CARBON FILTER (NOTE 1)	P01 - S/D IST STAGE ID FAN	P00 - S/D 2ND STAGE ID FAN

ITEM NUM	TAG NUMBER			DESCRIPTION		SET POINT	MALFUNCTION	PREALARM	REMARKS	ALARM BIT B001:XX/XX	MASK WORD B8:XX
17	24	PDAHH	053	MPF/DFS SPARE MIST ELIM DP AT CANDLES		20 in wc	X			TBD	TBD
18	24	LSHH	059	MPF/DFS SPARE MIST ELIM SUMP		66 in			Alarm to be deleted by PBAC1090INS.	5220/02	NA
19	24	LSLL	061	MPF/DFS SPARE MIST ELIM SUMP		8 in			3 sec delay. SP per PB-6-D-527. Alarm active when 24-HS-293 selected to MPF spare mist eliminator. Hardwired S/D of pump needs to be disabled when 24-HS-293 is aligned to the MPF. (Note 24-HS-293 is not shown on P&ID).	5220/00	438
20	24	LAH	067	MPF/DFS SPARE MIST ELIM SUMP		16 in			SP from PB-6-D-527. Start water return pump (see FAWB Note B-17).	5250/02	NA
21	24	LAHH	067	MPF/DFS SPARE MIST ELIM SUMP		18 in			SP per PB-6-D-527. Input to PAS NORMAL relay (ref: PBAC1090INS).	5250/04	NA
22	24	LAL	067	MPF/DFS SPARE MIST ELIM SUMP		10 in		X	SP per PB-6-D-527.	5250/00	NA
23	24	TAH	188	CLEAN LIQUOR	TO SCRUBBER	128°F		X	SP per RFI S-ALL-232.	1652/14	NA
24	24	TAHH	188	CLEAN LIQUOR	TO SCRUBBER	143°F	X		SP & response per RFI S-ALL-232.	1652/16	NA
25	24	TAL	188	CLEAN LIQUOR	TO SCRUBBER	100°F		X	SP per RFI S-ALL-232.	1652/12	NA
26	24	FAH	190	PAS-SCRB-101	CAUSTIC ADDITION	1.7 gpm		X	SP per RFI S-ALL-232. Note: AN modified SP.	1652/10	NA
27	24	FAL	190	PAS-SCRB-101	CAUSTIC ADDITION	0.1 gpm		X	SP per RFI S-ALL-232. Note: AN modified SP.	1652/06	NA
28	24	DAH	216	PAS-SCRB-101	BRINE DENSITY	1.20 sg		X	Setpoint from RFI S-ALL-0232	1850/16	508
29	24	DAHH	216	PAS-SCRB-101	BRINE DENSITY	1.25 sg	X		Setpoint from RFI S-ALL-0232	1851/02	326
30	24	FAL	217	PAS-TOWR-102	BRINE	60 gpm		X		1450/00	NA
31	24	FAL	218	BRINE TO MPF	VENTURI SCRBR	140 gpm		X	5 sec delay. Prealarm and SP per RFI C-ANCDF-003R1.	TBD	NA
32	24	FALL	218	BRINE TO MPF	VENTURI SCRBR	133 gpm	X		RCRA AWFCO MPF 22; 30 sec delay. Alarm & SP per RFI C-ANCDF-003R1. Permit lists alarm as FAL-218. Alarm not shown on PB-6-D-504.	1850/02	302
33	24	PDAH	222	PAS-SEPA-101	VENTURI SCRUB	SP+10 in wc		X	SP=setpoint entered in controller by operator	1850/06	NA
34	24	PDAL	222	PAS-SEPA-101	VENTURI SCRUB	25 in wc		X		1850/04	NA
35	24	PDALL	222	PAS-SEPA-101	VENTURI SCRUB	20 in wc	X		RCRA AWFCO MPF 14. See NOTE 3.	1851/00	318
36	24	TSHH	223	PAS-TOWR-102	OVERHEAD	215 F	X		SP per PBAC0788ICS R1 & PBAP981INS. See FAWB Note B-7.	1420/00	300
37	24	FSL	223	PAS-TOWR-102	PROCESS WATER	10 gpm			3 sec delay. SP from instrument data sheet. Active only when 24-TV-223 is open.	1420/02	NA
38	24	AAH	224	PAS QUENCH	BRINE pH	9.5 pH		X		1850/12	NA
39	24	AAL	224	PAS QUENCH	BRINE pH	7.5 pH		X		1820/10	NA

PBCDF METAL PARTS FURNACE (MPF) POLLUTION ABATEMENT SYSTEM (PAS) AND PAS FILTER SYSTEM (PFS)

PBCDF MPF PAS/PFS

ALARM AND INTERLOCK MATRIX

P&IDs: PB-1-D-528, PB-6-D-504, -505, -523, -526, -527 and -528
PLC: ICS-CONR-113; INTERLOCK: I-8

PBCDF MPF PAS/PFS

B8:010/

- F00 - SPARE
- F01 - SPARE
- F02 - S/D COOLING CONVEYOR
- F03 - S/D UNLOAD CONVEYOR
- F04 - STOP ZONE 1 TIMER
- F05 - STOP ZONE 2 TIMER
- F06 - STOP ZONE 3 TIMER
- F07 - S/D DISCHARGE AIRLOCK CONVEYOR
- F10 - S/D ZONE 3 CONVEYOR
- F11 - S/D ZONE 2 CONVEYOR
- F12 - S/D ZONE 1 CONVEYOR
- F13 - S/D CHARGE AIRLOCK CONVEYOR
- F14 - S/D COMBUSTION AIR BLOWER
- F15 - S/D RESPECTIVE MPF AFTERBURNER
- F16 - S/D RESPECTIVE MPF BURNER
- F17 - STOP FEED

B8:011/

- P17 - S/D PFS-COOL-114A FAN B (NOTE 1)
- P16 - S/D PFS-COOL-114A FAN A (NOTE 1)
- P15 - S/D PFS-COOL-114B FAN B (NOTE 1)
- P14 - S/D PFS-COOL-114B FAN A (NOTE 1)
- P13 - OPEN QUENCH EMERG. PRW (NOTE 1)
- P12 - S/D WATER RETURN PUMP
- P11 - BKUP BRINE PUMP ON (NOTE 1)
- P10 - BKUP CLEAN LIQ PUMP ON (NOTE 1)
- P07 - SPARE
- P06 - S/D BRINE PUMPS
- P05 - S/D CLEAN LIQUOR PUMPS
- P04 - S/D 1ST & 2ND STAGE ID FAN
- P03 - SPARE
- P02 - BYPASS CARBON FILTER (NOTE 1)
- P01 - S/D IST STAGE ID FAN
- P00 - S/D 2ND STAGE ID FAN

MALFUNCTION

PREALARM

ITEM NUM	TAG NUMBER			DESCRIPTION		SET POINT	MALFUNCTION	F17	F16	F15	F14	F13	F12	F11	F10	F07	F06	F05	F04	F03	F02	F01	F00	P17	P16	P15	P14	P13	P12	P11	P10	P07	P06	P05	P04	P03	P02	P01	P00	PREALARM	REMARKS	ALARM BIT B001:XX/XX	MASK WORD B8:XX
40	24	AALL	224	PAS QUENCH	BRINE pH	7.0 pH		X																																	Alarm is at TOCDF and is in Jan 2000 ANCDF code, but is not shown on PB-6-D-504.	1850/10	324
41	24	PDAH	225	PAS-SCRB-101	PACKED BED	6 in wc																																		X		1651/10	NA
42	24	FSL	226	PAS-SCRB-101	PROCESS WATER	20 gpm																																			3 sec delay. SP from instrument data sheet. Active only when 24-XV-226 is energized.	1620/10	NA
43	24	XA	228	PAS-PUMP-102	QUENCH BRINE	MALF	X																							X											Switchover to secondary pump on malf. alarm when PAS-PUMP-102 is selected as primary.	1860/11	NA
44	24	FISL	231	PAS-PUMP-102	SEAL WATER	0.15 gpm																																			3 sec delay. S/D PAS-PUMP-102 if selected as primary, which will cause 24-XA-228 to alarm. SP from instrument data sheet.	1820/00	NA
45	24	PAL	233	PAS-PUMP-102/3	BRINE DISCH	80 psig																								X											SP per DSIC. Switchover to secondary pump on low pressure alarm when primary is running.	1850/00	NA
46	24	PALL	233	PAS-PUMP-102/3	BRINE DISCH	40 psig		X																																	24-PALL-233 not shown on PB-6-D-504.	1851/04	538
47	24	XA	235	PAS-PUMP-103	QUENCH BRINE	MALF	X																							X											Switchover to secondary pump on malf. alarm when PAS-PUMP-103 is selected as primary.	1862/11	NA
48	24	FISL	238	PAS-PUMP-103	SEAL WATER	0.15 gpm																																			3 sec delay. S/D PAS-PUMP-103 if selected as primary, which will cause 24-XA-235 to alarm. SP from instrument data sheet.	1820/02	NA
49	24	LAH	242	PAS-TOWR-102	SUMP	2.0 in																																		X	SP from P&ID.	1450/04	NA
50	24	LAHH	242	PAS-TOWR-102	SUMP	8.0 in		X	X	X																															Shuts off brine spray to quench tower and PRW makeup to quench brine. Input to PAS NORMAL relay.	1450/02	304
51	24	LAL	243	PAS-SCRB-101	CLEAN LIQUOR SUMP	24 in																																		X	SP from P&ID (14 ft 0 in. minus 12 ft 0 in. offset). SP is 30 in. above bottom of chimney tray well point. Alarm response per Oct 2000 ANCDF PAS/PFS mtg.	1650/12	338
52	24	LSHHH	244	PAS-SCRB-101	SUMP	90 in		X	X	X																				X											RCRA AWFCO MPF 08. 3 sec delay. Listed in permit as LAHH-244. SP from P&ID. Permit SP is 84 in (see NOTE 3). Input to PAS NORMAL relay (see FAWB Note B-19). See NOTE 4 for additional interlocks.	1620/02	322
53	24	LAH	245	PAS-SCRB-101	SUMP	78 in																																		X	Prealarm per ANCDF Oct 2000 PAS/PFS mtg.	1650/16	322
54	24	LAL	245	PAS-SCRB-101	SUMP	54 in																																		X	Prealarm per ANCDF Oct 2000 PAS/PFS mtg.	1650/14	320

PBCDF METAL PARTS FURNACE (MPF) POLLUTION ABATEMENT SYSTEM (PAS) AND PAS FILTER SYSTEM (PFS)

PBCDF MPF PAS/PFS

ALARM AND INTERLOCK MATRIX

PBCDF MPF PAS/PFS

P&IDs: PB-1-D-528, PB-6-D-504, -505, -523, -526, -527 and -528
PLC: ICS-CONR-113; INTERLOCK: I-8

B8:010/

17	16	15	14	13	12	11	10	07	06	05	04	03	02	01	00
F00 - SPARE	F01 - SPARE	F02 - S/D COOLING CONVEYOR	F03 - S/D UNLOAD CONVEYOR	F04 - STOP ZONE 1 TIMER	F05 - STOP ZONE 2 TIMER	F06 - STOP ZONE 3 TIMER	F07 - S/D DISCHARGE AIRLOCK CONVEYOR	F10 - S/D ZONE 3 CONVEYOR	F11 - S/D ZONE 2 CONVEYOR	F12 - S/D ZONE 1 CONVEYOR	F13 - S/D CHARGE AIRLOCK CONVEYOR	F14 - S/D COMBUSTION AIR BLOWER	F15 - S/D RESPECTIVE MPF AFTERBURNER	F16 - S/D RESPECTIVE MPF BURNER	F17 - STOP FEED

B8:011/

17	16	15	14	13	12	11	10	07	06	05	04	03	02	01	00
P17 - S/D PFS-COOL-114A FAN B (NOTE 1)	P16 - S/D PFS-COOL-114A FAN A (NOTE 1)	P15 - S/D PFS-COOL-114B FAN B (NOTE 1)	P14 - S/D PFS-COOL-114B FAN A (NOTE 1)	P13 - OPEN QUENCH EMERG. PRW (NOTE 1)	P12 - S/D WATER RETURN PUMP	P11 - BKUP BRINE PUMP ON (NOTE 1)	P10 - BKUP CLEAN LIQ PUMP ON (NOTE 1)	P07 - SPARE	P06 - S/D BRINE PUMPS	P05 - S/D CLEAN LIQUOR PUMPS	P04 - S/D 1ST & 2ND STAGE ID FAN	P03 - SPARE	P02 - BYPASS CARBON FILTER (NOTE 1)	P01 - S/D IST STAGE ID FAN	P00 - S/D 2ND STAGE ID FAN

MALFUNCTION

PREALARM

ITEM NUM	TAG NUMBER			DESCRIPTION		SET POINT	17	16	15	14	13	12	11	10	07	06	05	04	03	02	01	00	17	16	15	14	13	12	11	10	07	06	05	04	03	02	01	00	MALFUNCTION	PREALARM	REMARKS	ALARM BIT B001:XX/XX	MASK WORD B8:XX
55	24	LSHH	245	PAS-SCRB-101	SUMP	84 in	X																																		Open 24-DV-216 (deenergize 24-LY-216). Stop feed per RFI C-ANCDF-004.	1621/12	NA
56	24	LSLL	245	PAS-SCRB-101	SUMP	48 in	X																																		Close 24-DV-216 (24-LY-216 energized and drive 24-DY-216 to close). Stop feed per RFI C-ANCDF-004.	1621/14	NA
57	24	LSLLL	246	PAS-SCRB-101	SCRUBBER SUMP	42 in	X	X	X																							X									RCRA AWFCO MPF 09. 3 sec delay. Listed in permit as LALL-246. Measured from bottom tangent line. SP from P&ID. Permit SP is 24 in (see NOTE 3). Input to PAS NORMAL relay (see FAWB Note B-19).	1620/00	320
58	24	AAH	247	PAS SCRUBBER	CLEAN LIQ pH	9.5 pH																																	X			1651/02	NA
59	24	AAL	247	PAS SCRUBBER	CLEAN LIQ pH	6.0 pH	X																																		RCRA AWFCO MPF 20. See NOTE 3. Note: AN & UM have a prealarm and the RCRA AWFCO as AALL-247. See FAWB Note B-16.	1651/00	TBD
60	24	FAL	248	CLEAN LIQUOR	TO SCRUBBER	SP-10%																																	X		SP = setpoint entered in controller by operator. Design flow is 797 gpm.	1650/10	NA
61	24	FALL	248	CLEAN LIQUOR	TO SCRUBBER	600 gpm	X																																		RCRA AWFCO MPF 15. 10 sec delay after pump startup. See NOTE 3.	1650/06	306
62	24	DAH	249	CLEAN LIQUOR	DENSITY	TBD																																	X		SP to be determined.	1651/04	NA
63	24	DAHH	249	CLEAN LIQUOR	DENSITY	1.28 sg	X																																		RCRA AWFCO MPF 23. See NOTE 3.	1651/12	TBD
64	24	PDAH	265	BRINE TO QUENCH	FILTER	10.0 psid																																	X			1450/06	NA
65	24	PDAH	266	PAS-SCRB-101	MIST ELIM D.P.	2 in wc																																	X			1651/06	NA
66	24	XA	285	2nd STAGE ID FAN	TROUBLE	Trouble	X																																	X	Alarm response per RFI C-ANCDF-002. Trouble alarm initiated by ASD motor thermal overload which stops the motor.	1224/00	TBD
67	24	SAH	285A	2nd STAGE ID FAN	SPEED	1800 rpm	X																																	X	SP per RFI S-ALL-232.	1253/02	TBD
68	24	XA	287	1st & 2nd STAGE ID FAN		NOT RUNNING	X			X																																I:210/03 I:210/05	482
69	24	XA	288	PAS-BLOW-102	2ND STAGE MTR	MALF	X	X																																X	Start I-lock for 2nd stage motor.	1263/11	490
70	24	PDAH	291	PAS-DMIS-103	DP AT CANDLES	15 in wc																																	X			0650/04	NA
71	24	PDAHH	291	PAS-DMIS-103	DP AT CANDLES	20 in wc		X																																		0650/12	310
72	24	LSHH	292	PAS MIST ELIM.	SUMP	66 in																																			Alarm to be deleted by PBAC1090INS.	0620/02	NA
73	24	LAH	293	PAS MIST ELIM.	SUMP	18 in																																			SP from PB-6-D-505. Start PAS-PUMP-137 (see FAWB Note B-17).	0650/02	NA

PBCDF METAL PARTS FURNACE (MPF) POLLUTION ABATEMENT SYSTEM (PAS) AND PAS FILTER SYSTEM (PFS)

PBCDF MPF PAS/PFS

ALARM AND INTERLOCK MATRIX

P&IDs: PB-1-D-528, PB-6-D-504, -505, -523, -526, -527 and -528
PLC: ICS-CONR-113; INTERLOCK: I-8

PBCDF MPF PAS/PFS

B8:010/

17	16	15	14	13	12	11	10	07	06	05	04	03	02	01	00
F00 - SPARE	F01 - SPARE	F02 - S/D COOLING CONVEYOR	F03 - S/D UNLOAD CONVEYOR	F04 - STOP ZONE 1 TIMER	F05 - STOP ZONE 2 TIMER	F06 - STOP ZONE 3 TIMER	F07 - S/D DISCHARGE AIRLOCK CONVEYOR	F10 - S/D ZONE 3 CONVEYOR	F11 - S/D ZONE 2 CONVEYOR	F12 - S/D ZONE 1 CONVEYOR	F13 - S/D CHARGE AIRLOCK CONVEYOR	F14 - S/D COMBUSTION AIR BLOWER	F15 - S/D RESPECTIVE MPF AFTERBURNER	F16 - S/D RESPECTIVE MPF BURNER	F17 - STOP FEED

B8:011/

17	16	15	14	13	12	11	10	07	06	05	04	03	02	01	00
P17 - S/D PFS-COOL-114A FAN B (NOTE 1)	P16 - S/D PFS-COOL-114A FAN A (NOTE 1)	P15 - S/D PFS-COOL-114B FAN B (NOTE 1)	P14 - S/D PFS-COOL-114B FAN A (NOTE 1)	P13 - OPEN QUENCH EMERG. PRW (NOTE 1)	P12 - S/D WATER RETURN PUMP	P11 - BKUP BRINE PUMP ON (NOTE 1)	P10 - BKUP CLEAN LIQ PUMP ON (NOTE 1)	P07 - SPARE	P06 - S/D BRINE PUMPS	P05 - S/D CLEAN LIQUOR PUMPS	P04 - S/D 1ST & 2ND STAGE ID FAN	P03 - SPARE	P02 - BYPASS CARBON FILTER (NOTE 1)	P01 - S/D IST STAGE ID FAN	P00 - S/D 2ND STAGE ID FAN

ITEM NUM	TAG NUMBER			DESCRIPTION		SET POINT	MALFUNCTION	PREALARM	REMARKS	ALARM BIT B001:XX/XX	MASK WORD B8:XX
74	24	LAHH	293	PAS MIST ELIM.	SUMP	20 in			SP from PB-6-D-505. Input to PAS NORMAL relay (ref: PBAC1090INS).	0650/10	NA
75	24	LAL	293	PAS MIST ELIM.	SUMP	10 in		X	SP from PB-6-D-505.	0650/00	NA
76	24	LSLL	294	PAS MIST ELIM.	SUMP	8 in			3 sec delay. SP from PB-6-D-505. Alarm active when 24-HS-293 selected to MPF mist eliminator. Hardwired S/D of pump needs to be disabled when 24-HS-293 is aligned to the spare. (Note 24-HS-293 is not shown on P&ID).	0620/00	438
77	24	XAH	306	PAS-BLOW-102	2ND STAGE VIB	0.25 in/sec			3 sec delay. See NOTE 6.	1251/10	548
78	24	XSHH	306	PAS-BLOW-102	2ND STAGE VIB	0.5 in/sec			3 sec delay. S/D 2nd stage, except when running in emergency mode. See NOTE 6.	1220/06	448
79	24	TSH	307A-F	2nd STAGE ID FAN	WINDING TEMP	320°F			SP from vendor info. Alarm on high temp for any of 24-TSH-307A through F. Stop feed per PB-6-D-505 Note 19.	1220/00	446
80	24	TSHH	307A-F	2nd STAGE ID FAN	WINDING TEMP	329°F			SP from vendor info. Alarm on high-high temp for any of 24-TSHH-307A through F. PB-6-D-505 Note 21 specifies S/D 2nd stage, except when running in emergency mode.	1222/10	TBD
81	24	XA	321	BRINE/CLEAN LIQ.	DENSITY	MALF			Alarm for MALF signal from 24-XS-216 or 24-XS-249	TBD	NA
82	24	TSH	446A/B	1st STAGE ID FAN	BEARING TEMP	160°F			SP from vendor info. Stop feed per PB-6-D-505 Note 19.	TBD	TBD
83	24	TSHH	446A/B	1st STAGE ID FAN	BEARING TEMP	200°F			5 sec delay. SP from vendor info. PB-6-D-505 Note 21 specifies S/D 1st stage, except when running in emergency mode.	1221/10	484
84	24	TSH	447A/B	2nd STAGE ID FAN	BEARING TEMP	160°F			SP from vendor info. Stop feed per PB-6-D-505 Note 19.	TBD	TBD
85	24	TSHH	447A/B	2nd STAGE ID FAN	BEARING TEMP	200°F			5 sec delay. SP from vendor info. PB-6-D-505 Note 21 specifies S/D 2nd stage, except when running in emergency mode.	1221/12	484
86	24	IAH	500	PAS-BLOW-102	2ND STAGE MTR	304 amp			2-min delay on startup. SP per RFI S-ALL-232.	1250/02	492
87	24	TAH	509	PAS-TOWR-102	QUENCH TWR OVH	200°F			SP from PBAP981INS (see FAWB Note B-7).	1450/10	512

PBCDF METAL PARTS FURNACE (MPF) POLLUTION ABATEMENT SYSTEM (PAS) AND PAS FILTER SYSTEM (PFS)

PBCDF MPF PAS/PFS

ALARM AND INTERLOCK MATRIX

PBCDF MPF PAS/PFS

P&IDs: PB-1-D-528, PB-6-D-504, -505, -523, -526, -527 and -528
PLC: ICS-CONR-113; INTERLOCK: I-8

B8:010/

17	16	15	14	13	12	11	10	07	06	05	04	03	02	01	00
F00 - SPARE	F01 - SPARE	F02 - S/D COOLING CONVEYOR	F03 - S/D UNLOAD CONVEYOR	F04 - STOP ZONE 1 TIMER	F05 - STOP ZONE 2 TIMER	F06 - STOP ZONE 3 TIMER	F07 - S/D DISCHARGE AIRLOCK CONVEYOR	F10 - S/D ZONE 3 CONVEYOR	F11 - S/D ZONE 2 CONVEYOR	F12 - S/D ZONE 1 CONVEYOR	F13 - S/D CHARGE AIRLOCK CONVEYOR	F14 - S/D COMBUSTION AIR BLOWER	F15 - S/D RESPECTIVE MPF AFTERBURNER	F16 - S/D RESPECTIVE MPF BURNER	F17 - STOP FEED

B8:011/

17	16	15	14	13	12	11	10	07	06	05	04	03	02	01	00
P17 - S/D PFS-COOL-114A FAN B (NOTE 1)	P16 - S/D PFS-COOL-114A FAN A (NOTE 1)	P15 - S/D PFS-COOL-114B FAN B (NOTE 1)	P14 - S/D PFS-COOL-114B FAN A (NOTE 1)	P13 - OPEN QUENCH EMERG. PRW (NOTE 1)	P12 - S/D WATER RETURN PUMP	P11 - BKUP BRINE PUMP ON (NOTE 1)	P10 - BKUP CLEAN LIQ PUMP ON (NOTE 1)	P07 - SPARE	P06 - S/D BRINE PUMPS	P05 - S/D CLEAN LIQUOR PUMPS	P04 - S/D 1ST & 2ND STAGE ID FAN	P03 - SPARE	P02 - BYPASS CARBON FILTER (NOTE 1)	P01 - S/D IST STAGE ID FAN	P00 - S/D 2ND STAGE ID FAN

ITEM NUM	TAG NUMBER	DESCRIPTION	SET POINT	MALFUNCTION	B8:010/ 17	16	15	14	13	12	11	10	07	06	05	04	03	02	01	00	B8:011/ 17	16	15	14	13	12	11	10	07	06	05	04	03	02	01	00	PREALARM	REMARKS	ALARM BIT B001:XX/XX	MASK WORD B8:XX
88	24 TSHHH 510	PAS-TOWR-102 QUENCH TWR OVH	250°F		X	X	X																															RCRA AWFCO MPF 07. SP from RCRA permit, PBAC788ICS R1 & PBAP981INS. Input to PAS NORMAL relay. See FAWB Note B-7.	1420/10	316
89	24 LSLL 513	PAS-SCRB-101 CLEAN LIQUOR SUMP	3 in		X										X																							3 sec delay. SP from P&ID (14 ft 0 in. minus 12 ft 0 in. offset). SP is 9 in. above bottom of chimney tray well point. Alarm response per Oct 2000 ANCDF PAS/PFS mtg.	1620/12	338
90	24 PDAH 582	PAS-SCRB-101 CLEAN LIQ FIL	10.0 psid																																	X			1650/02	NA
91	24 FSL 666	PAS-SCRB-101 PURGE PERMISS	1500 scfm																																	X	Min flow for purge; 3 sec delay. SP from instrument data sheet.	1620/16	NA
92	24 FSLL 666	PAS-SCRB-101 NFPA BURN S/D	900 scfm		X	X	X																															3 sec delay for stop feed. SP from instrument data sheet. BMS 3-P running interlock.	1620/14	486
93	24 AAH 669	MPF EXH GAS CO TO STACK	160 ppm		X																																	Instantaneous alarm. Corrected to 7% O2 dry basis. See NOTE 2.	1250/14	456
94	24 AAH 669	MPF EXH GAS CO TO STACK	90 ppm		X																																	ROHA alarm. Corrected to 7% O2 dry basis. See NOTE 2.	TBD	TBD
95	24 XS 669	MPF EXH GAS CO TO STACK	MALF	X	X																																	Stop feed on malf. alarm only if 14-AIT-384 is also in malf. or is in "calibrate" mode. Alarm active only when combined fuel flow to primary and secondary > 100 scfm. See NOTE 2.	1220/04 1222/16	TBD
96	24 AAH 670	MPF EXH GAS TO STACK 02	20% O2		X																																	Instantaneous alarm. Corrected to dry basis. See NOTE 2.	1220/10	454
97	24 XS 670	MPF EXH GAS TO STACK 02	MALF	X	X																																	Stop feed on malf. alarm only if 14-AIT-081 is also in malf. or is in "calibrate" mode. See NOTE 2.	1220/12 1222/14	TBD
98	24 FISL 760	PAS-PUMP-137 WTR RTN PUMP	0.15 gpm																						X													3 sec delay. SP from instrument data sheet.	0620/12	NA
99	24 XA 778	1st STAGE ID FAN TROUBLE	Trouble		X																														X			Alarm response per RFI C-ANCDF-002. Trouble alarm initiated by ASD motor thermal overload which stops the motor.	1223/16	TBD
100	24 SAH 778A	1st STAGE ID FAN SPEED	1800 rpm		X																														X			SP per RFI S-ALL-232.	1253/00	TBD
101	24 XA 910	PAS-PUMP-134 RECVD WTR FEED PMP	MALF	X																																		Switchover to backup pump on malf. alarm when PAS-PUMP-134 is selected as primary.	4060/11	NA
102	24 PSLL 913	RECVD WTR FEED PUMP DISCH PRESS	70 psig																																			3 sec delay. SP from TOCDF. Hardwired S/D of PAS-PUMP-134/135.	4020/00	NA
103	24 XA 915	PAS-PUMP-135 RECVD WTR FEED PMP	MALF	X																																		Switchover to backup pump on malf. alarm when PAS-PUMP-135 is selected as primary.	4061/11	NA

PBCDF METAL PARTS FURNACE (MPF) POLLUTION ABATEMENT SYSTEM (PAS) AND PAS FILTER SYSTEM (PFS)

PBCDF MPF PAS/PFS

ALARM AND INTERLOCK MATRIX

PBCDF MPF PAS/PFS

P&IDs: PB-1-D-528, PB-6-D-504, -505, -523, -526, -527 and -528
PLC: ICS-CONR-113; INTERLOCK: I-8

B8:010/

- 17 F00 - SPARE
- 16 F01 - SPARE
- 15 F02 - S/D COOLING CONVEYOR
- 14 F03 - S/D UNLOAD CONVEYOR
- 13 F04 - STOP ZONE 1 TIMER
- 12 F05 - STOP ZONE 2 TIMER
- 11 F06 - STOP ZONE 3 TIMER
- 10 F07 - S/D DISCHARGE AIRLOCK CONVEYOR
- 07 F10 - S/D ZONE 3 CONVEYOR
- 06 F11 - S/D ZONE 2 CONVEYOR
- 05 F12 - S/D ZONE 1 CONVEYOR
- 04 F13 - S/D CHARGE AIRLOCK CONVEYOR
- 03 F14 - S/D COMBUSTION AIR BLOWER
- 02 F15 - S/D RESPECTIVE MPF AFTERBURNER
- 01 F16 - S/D RESPECTIVE MPF BURNER
- 00 F17 - STOP FEED

B8:011/

- 17 P17 - S/D PFS-COOL-114A FAN B (NOTE 1)
- 16 P16 - S/D PFS-COOL-114A FAN A (NOTE 1)
- 15 P15 - S/D PFS-COOL-114B FAN B (NOTE 1)
- 14 P14 - S/D PFS-COOL-114B FAN A (NOTE 1)
- 13 P13 - OPEN QUENCH EMERG. PRW (NOTE 1)
- 12 P12 - S/D WATER RETURN PUMP
- 11 P11 - BKUP BRINE PUMP ON (NOTE 1)
- 10 P10 - BKUP CLEAN LIQ PUMP ON (NOTE 1)
- 07 P07 - SPARE
- 06 P06 - S/D BRINE PUMPS
- 05 P05 - S/D CLEAN LIQUOR PUMPS
- 04 P04 - S/D 1ST & 2ND STAGE ID FAN
- 03 P03 - SPARE
- 02 P02 - BYPASS CARBON FILTER (NOTE 1)
- 01 P01 - S/D IST STAGE ID FAN
- 00 P00 - S/D 2ND STAGE ID FAN

MALFUNCTION

PREALARM

ITEM NUM	TAG NUMBER			DESCRIPTION	SET POINT	MALFUNCTION	B8:010/17	B8:010/16	B8:010/15	B8:010/14	B8:010/13	B8:010/12	B8:010/11	B8:010/10	B8:010/07	B8:010/06	B8:010/05	B8:010/04	B8:010/03	B8:010/02	B8:010/01	B8:010/00	B8:011/17	B8:011/16	B8:011/15	B8:011/14	B8:011/13	B8:011/12	B8:011/11	B8:011/10	B8:011/07	B8:011/06	B8:011/05	B8:011/04	B8:011/03	B8:011/02	B8:011/01	B8:011/00	PREALARM	REMARKS	ALARM BIT B001:XX/XX	MASK WORD B8:XX
104	24	PSL	919	RECVD WTR FEED PUMP DISCH PRESS	85 psig																																			3 sec delay. Switchover to backup pump. SP from TOCDF.	4020/02	NA
105	24	LAH	920	RECOVERED WATER TANK LEVEL HIGH	12'0"																																		X	SP per PB-6-D-510	4050/00	NA
106	24	LAL	920	RECOVERED WATER TANK LEVEL LOW	2'0"																																		X	SP per PB-6-D-510	4050/02	NA
107	24	LSHH	921	RECVD WATER TANK LEVEL HIGH HIGH	13'6"																																			3 sec delay. SP per PB-6-D-510. Hardwired S/D of PAS-PUMP-110.	4020/04	NA
108	24	LSLL	922	RECVD WATER TANK LEVEL LOW LOW	1'4"																																			3 sec delay. SP per PB-6-D-510. S/D PAS-PUMP-134/135.	4020/06	NA
109	24	PSH	953	PAS-BLOW-102 I.D. FAN	-10.5 in wc																																		X	SP from instrument data sheet.	1220/14	NA
110	24	TSH	971 A-F	1st STAGE ID FAN MTR WINDING TEMP	320°F		X																																	SP from vendor info. Alarm on high temp for any of 24-TSH-971A through F. Stop feed per PB-6-D-505 Note 19.	1221/16	464
111	24	TSHH	971 A-F	1st STAGE ID FAN MTR WINDING TEMP	329°F																																X			SP from vendor info. Alarm on high-high temp for any of 24-TSHH-971A through F. PB-6-D-505 Note 21 specifies S/D 1st stage, except when running in emergency mode.	1222/12	TBD
112	24	IAH	972	PAS-BLOW-102 1ST STAGE MTR	304 amp		X																														X			2-min delay on startup. SP per RFI S-ALL-232.	1250/04	494
113	24	XAH	973	PAS-BLOW-102 1ST STAGE VIB	0.25 in/sec		X																																	3 sec delay. See NOTE 6.	1251/02	546
114	24	XSHH	973	PAS-BLOW-102 1ST STAGE VIB	0.5 in/sec																																X			3 sec delay.S/D 1st stage, except when running in emergency mode. See NOTE 6.	1222/00	468
115	24	XA	975	PAS-BLOW-102 1ST STAGE MTR	MALF	X	X																														X			Start I-lock for 1st stage motor.	1261/11	488
116	114	ZS	093B	PFS-FILT-110 BYPASS DAMPER	NOT CLOSED		X																																	RCRA AWFCO MPF 34. Agent feed permissive per PB-6-D-526 Note 4. Listed in permit as TV-425B with setpoint "OPEN."	5061/14	TBD
117	114	XA	096	PFS-BURN-102 EXH MOIST ANALYZER	> 10% DIFF																																		X	Alarm when MIT-096A & B deviation exceeds 10% of upper range value based on ROHA.	TBD	NA
118	114	MAH	096A	PFS-BURN-102 EXH. REL. HUMIDITY	60%RH																																		X	Instantaneous alarm. See NOTE 7.	5051/10	TBD
119	114	MSHH	096A	PFS-BURN-102 EXH. REL. HUMIDITY	80%RH		X																																	RCRA AWFCO MPF 33. Instantaneous alarm. Listed in RCRA permit as MAH-494B. See NOTE 7.	5020/00	TBD
120	114	XS	096A	PFS-BURN-102 EXH MOIST ANALYZER	MALF	X	X																																	On time delay. Remove instrument from ROHA calculation if it is the active unit. See NOTE 7.	5020/04	NA
121	114	MAH	096B	PFS-BURN-102 EXH. REL. HUMIDITY	60%RH																																		X	Instantaneous alarm. See NOTE 7.	5051/12	TBD

PBCDF METAL PARTS FURNACE (MPF) POLLUTION ABATEMENT SYSTEM (PAS) AND PAS FILTER SYSTEM (PFS)

PBCDF MPF PAS/PFS

ALARM AND INTERLOCK MATRIX

PBCDF MPF PAS/PFS

P&IDs: PB-1-D-528, PB-6-D-504, -505, -523, -526, -527 and -528
PLC: ICS-CONR-113; INTERLOCK: I-8

B8:010/

Bit	Description
17	F00 - SPARE
16	F01 - SPARE
15	F02 - S/D COOLING CONVEYOR
14	F03 - S/D UNLOAD CONVEYOR
13	F04 - STOP ZONE 1 TIMER
12	F05 - STOP ZONE 2 TIMER
11	F06 - STOP ZONE 3 TIMER
10	F07 - S/D DISCHARGE AIRLOCK CONVEYOR
07	F10 - S/D ZONE 3 CONVEYOR
06	F11 - S/D ZONE 2 CONVEYOR
05	F12 - S/D ZONE 1 CONVEYOR
04	F13 - S/D CHARGE AIRLOCK CONVEYOR
03	F14 - S/D COMBUSTION AIR BLOWER
02	F15 - S/D RESPECTIVE MPF AFTERBURNER
01	F16 - S/D RESPECTIVE MPF BURNER
00	F17 - STOP FEED

B8:011/

Bit	Description
17	P17 - S/D PFS-COOL-114A FAN B (NOTE 1)
16	P16 - S/D PFS-COOL-114A FAN A (NOTE 1)
15	P15 - S/D PFS-COOL-114B FAN B (NOTE 1)
14	P14 - S/D PFS-COOL-114B FAN A (NOTE 1)
13	P13 - OPEN QUENCH EMERG. PRW (NOTE 1)
12	P12 - S/D WATER RETURN PUMP
11	P11 - BKUP BRINE PUMP ON (NOTE 1)
10	P10 - BKUP CLEAN LIQ PUMP ON (NOTE 1)
07	P07 - SPARE
06	P06 - S/D BRINE PUMPS
05	P05 - S/D CLEAN LIQUOR PUMPS
04	P04 - S/D 1ST & 2ND STAGE ID FAN
03	P03 - SPARE
02	P02 - BYPASS CARBON FILTER (NOTE 1)
01	P01 - S/D IST STAGE ID FAN
00	P00 - S/D 2ND STAGE ID FAN

ITEM NUM	TAG NUMBER			DESCRIPTION	SET POINT	MALFUNCTION	B8:010/17	B8:010/16	B8:010/15	B8:010/14	B8:010/13	B8:010/12	B8:010/11	B8:010/10	B8:010/07	B8:010/06	B8:010/05	B8:010/04	B8:010/03	B8:010/02	B8:010/01	B8:010/00	B8:011/17	B8:011/16	B8:011/15	B8:011/14	B8:011/13	B8:011/12	B8:011/11	B8:011/10	B8:011/07	B8:011/06	B8:011/05	B8:011/04	B8:011/03	B8:011/02	B8:011/01	B8:011/00	PREALARM	REMARKS	ALARM BIT B001:XX/XX	MASK WORD B8:XX
122	114	MSHH	096B	PFS-BURN-102 EXH. REL. HUMIDITY	80%RH		X																																	RCRA AWFCO MPF 33. Instantaneous alarm. Listed in RCRA permit as MAH-494B. See NOTE 7.	5020/02	TBD
123	114	XS	096B	PFS-BURN-102 EXH MOIST ANALYZER	MALF	X	X																																	On time delay. Remove instrument from ROHA calculation if it is the active unit. See NOTE 7.	5020/06	NA
124	114	MAH	096C	PFS-BURN-102 EXH REL HUMIDITY	52%RH																																		X	ROHA. See NOTE 7.	TBD	NA
125	114	MAHH	096C	PFS-BURN-102 EXH REL HUMIDITY	55%RH		X																																	ROHA. See NOTE 7.	TBD	NA
126	114	TSHH	097	PFS-BURN-102 EXHAUST TEMP	180 F		X																													X				Stop feed & bypass filter per PB-6-D-526 Note 3.	5020/10	TBD
127	114	TISH	100	PFS-BURN-102 EXHAUST TEMP	168°F																																		X	5 sec delay. SP per DSIC.	5020/12	NA
128	114	TSHH	100	PFS-BURN-102 EXHAUST TEMP	176°F																																			5 sec delay. S/D PFS-BURN-102. SP per DSIC.	5020/14	NA
129	114	XA	127	PFS-BURN-102 BURNER TROUBLE S/D	LOCKOUT		X																																	5 sec delay. Stop feed per PB-6-D-526.	5021/00	TDB
130	114	FSL	133	PFS-PUMP-142 SUCTION FLOW	2.4 gpm																																			S/D PFS-PUMP-142 via 114-FV-133 after pump is started manually and switched to auto mode.	TBD	NA
131	114	XA	354	CLEAN LIQ PUMP A (PFS-PUMP-136)	MALF	X																								X										Switchover to backup pump on malf. alarm when PFS-PUMP-136 is selected as primary.	1660/11	NA
132	114	FISL	356	CLEAN LIQ PUMP A SEAL WATER	0.15 gpm																																			3 sec delay. S/D PFS-PUMP-136 if selected as primary, which will cause 114-XA-354 to alarm. SP from instrument data sheet.	1620/04	NA
133	114	PAL	358	CLEAN LIQ PUMP DISCH PRESS	40 psig																									X										10 sec delay after pump startup. 3 sec delay before S/D of primary pump. Response per Oct 2000 ANCDF PAS/PFS review mtg.	1650/00	514
134	114	PALL	358	CLEAN LIQ PUMP DISCH PRESS	15 psig		X															X	X	X	X								X							RCRA AWFCO MPF 21. See NOTE 3. 10 sec delay after pump startup. Response per Oct 2000 ANCDF PAS/PFS review mtg. Listed in permit as PALL-258.	1650/04	308
135	114	XA	361	CLEAN LIQ PUMP B (PFS-PUMP-137)	MALF	X																								X										Switchover to backup pump on malf. alarm when PFS-PUMP-137 is selected as primary.	1662/11	NA
136	114	FISL	363	CLEAN LIQ PUMP B SEAL WATER	0.15 gpm																																			3 sec delay. S/D PFS-PUMP-137 if selected as primary, which will cause 114-XA-361 to alarm. SP from instrument data sheet.	1620/06	NA
137	114	PDAH	364	PFS-COOL-114B CLEAN LIQ COOLER	20 psid																																		X	SP per RFI S-ALL-232.	0850/06	NA
138	114	PDAL	364	PFS-COOL-114B CLEAN LIQ COOLER	8 psid																																		X	SP per RFI S-ALL-232.	0850/04	NA
139	114	TAH	419	PFS-BURN-102 EXHAUST TEMP	172°F																																		X	SP per RFI S-ALL-241 R1.	5051/14	NA
140	114	TAL	419	PFS-BURN-102 EXHAUST TEMP	135°F																																		X	SP per RFI S-ALL-241 R1.	5051/16	NA

PBCDF METAL PARTS FURNACE (MPF) POLLUTION ABATEMENT SYSTEM (PAS) AND PAS FILTER SYSTEM (PFS)

PBCDF MPF PAS/PFS

ALARM AND INTERLOCK MATRIX

P&IDs: PB-1-D-528, PB-6-D-504, -505, -523, -526, -527 and -528
PLC: ICS-CONR-113; INTERLOCK: I-8

PBCDF MPF PAS/PFS

B8:010/

- F00 - SPARE
- F01 - SPARE
- F02 - S/D COOLING CONVEYOR
- F03 - S/D UNLOAD CONVEYOR
- F04 - STOP ZONE 1 TIMER
- F05 - STOP ZONE 2 TIMER
- F06 - STOP ZONE 3 TIMER
- F07 - S/D DISCHARGE AIRLOCK CONVEYOR
- F10 - S/D ZONE 3 CONVEYOR
- F11 - S/D ZONE 2 CONVEYOR
- F12 - S/D ZONE 1 CONVEYOR
- F13 - S/D CHARGE AIRLOCK CONVEYOR
- F14 - S/D COMBUSTION AIR BLOWER
- F15 - S/D RESPECTIVE MPF AFTERBURNER
- F16 - S/D RESPECTIVE MPF BURNER
- F17 - STOP FEED
- MALFUNCTION

B8:011/

- P17 - S/D PFS-COOL-114A FAN B (NOTE 1)
- P16 - S/D PFS-COOL-114A FAN A (NOTE 1)
- P15 - S/D PFS-COOL-114B FAN B (NOTE 1)
- P14 - S/D PFS-COOL-114B FAN A (NOTE 1)
- P13 - OPEN QUENCH EMERG. PRW (NOTE 1)
- P12 - S/D WATER RETURN PUMP
- P11 - BKUP BRINE PUMP ON (NOTE 1)
- P10 - BKUP CLEAN LIQ PUMP ON (NOTE 1)
- P07 - SPARE
- P06 - S/D BRINE PUMPS
- P05 - S/D CLEAN LIQUOR PUMPS
- P04 - S/D 1ST & 2ND STAGE ID FAN
- P03 - SPARE
- P02 - BYPASS CARBON FILTER (NOTE 1)
- P01 - S/D IST STAGE ID FAN
- P00 - S/D 2ND STAGE ID FAN
- PREALARM

ITEM NUM	TAG NUMBER	DESCRIPTION	SET POINT	B8:010/ 17	16	15	14	13	12	11	10	07	06	05	04	03	02	01	00	B8:011/ 17	16	15	14	13	12	11	10	07	06	05	04	03	02	01	00		REMARKS	ALARM BIT B001:XX/XX	MASK WORD B8:XX
141	114 PDAH 438A	PFS-FILT-110 PREFILTER BANK	2.0 in wc																																	X	SP per RFI S-ALL-232.	5050/00	NA
142	114 PDAHH 438A	PFS-FILT-110 PREFILTER BANK	10 in wc	X																																	RCRA AWFCO MPF 30. Listed in permit as PDAH-642A. See NOTE 3. Tag # recommended by DSIC and is not shown on PB-6-D-523.	TBD	TBD
143	114 PDAH 438B	PFS-FILT-110 1st HEPA FILTER BANK	4.0 in wc																																	X	SP per RFI S-ALL-232.	5050/02	NA
144	114 PDAHH 438B	PFS-FILT-110 1st HEPA FILTER BANK	10 in wc	X																																	RCRA AWFCO MPF 31. Listed in permit as PDAH-642B. See NOTE 3. Tag # recommended by DSIC and is not shown on PB-6-D-523.	TBD	TBD
145	114 PDAH 438C	PFS-FILT-110 1st CARBON FILT BANK	3.5 in wc																																	X	SP per RFI S-ALL-232.	5050/04	NA
146	114 PDAH 438D	PFS-FILT-110 2nd CARBON FILT BANK	3.5 in wc																																	X	SP per RFI S-ALL-232.	5050/06	NA
147	114 PDAH 438E	PFS-FILT-110 2nd HEPA FILTER BANK	4.0 in wc																																	X	SP per RFI S-ALL-232.	5050/10	NA
148	114 PDAH 438F	PFS-FILT-110 OVERALL DP	16 in wc																																	X	SP per RFI S-ALL-232.	5050/12	NA
149	114 XA 484	PFS-COOL-114B FAN A	TROUBLE																			X															On time delay. Alarm generated by XSHH-526 or VFD in fault lockout. VFD internally configured to stop motor (see RFI C-PBCDF-002).	0821/04	NA
150	114 XA 485	PFS-COOL-114B FAN B	TROUBLE																			X															On time delay. Alarm generated by XSHH-524 or VFD in fault lockout. VFD internally configured to stop motor (see RFI C-PBCDF-002).	0821/06	NA
151	114 XA 486	PFS-COOL-114A FAN B	TROUBLE																	X																	On time delay. Alarm generated by XSHH-542 or VFD in fault lockout. VFD internally configured to stop motor (see RFI C-PBCDF-002).	0821/02	NA
152	114 PDAH 487A	PFS-FILT-113 PREFILTER BANK	2.0 in wc																																	X	SP per RFI S-ALL-232.	5050/14	NA
153	114 PDAHH 487A	PFS-FILT-113 PREFILTER BANK	10 in wc	X																																	RCRA AWFCO DFS 35, LIC 33 or MPF 30. PFS-FILT-113 is common spare; stop feed depends on furnace alignment. See NOTE 3. Tag # recommended by DSIC and is not shown on PB-6-D-523.	TBD	TBD
154	114 PDAH 487B	PFS-FILT-113 1st HEPA FILTER BANK	4.0 in wc																																	X	SP per RFI S-ALL-232.	5050/16	NA
155	114 PDAHH 487B	PFS-FILT-113 1st HEPA FILTER BANK	10 in wc	X																																	RCRA AWFCO DFS 36, LIC 34 or MPF 31. PFS-FILT-113 is common spare; stop feed depends on furnace alignment. See NOTE 3. Tag # recommended by DSIC and is not shown on PB-6-D-523.	TBD	TBD
156	114 PDAH 487C	PFS-FILT-113 1st CARBON FILT BANK	3.5 in wc																																	X	SP per RFI S-ALL-232.	5051/00	NA

PBCDF METAL PARTS FURNACE (MPF) POLLUTION ABATEMENT SYSTEM (PAS) AND PAS FILTER SYSTEM (PFS)

PBCDF MPF PAS/PFS

ALARM AND INTERLOCK MATRIX

PBCDF MPF PAS/PFS

P&IDs: PB-1-D-528, PB-6-D-504, -505, -523, -526, -527 and -528
PLC: ICS-CONR-113; INTERLOCK: I-8

B8:010/

- F00 - SPARE
- F01 - SPARE
- F02 - S/D COOLING CONVEYOR
- F03 - S/D UNLOAD CONVEYOR
- F04 - STOP ZONE 1 TIMER
- F05 - STOP ZONE 2 TIMER
- F06 - STOP ZONE 3 TIMER
- F07 - S/D DISCHARGE AIRLOCK CONVEYOR
- F10 - S/D ZONE 3 CONVEYOR
- F11 - S/D ZONE 2 CONVEYOR
- F12 - S/D ZONE 1 CONVEYOR
- F13 - S/D CHARGE AIRLOCK CONVEYOR
- F14 - S/D COMBUSTION AIR BLOWER
- F15 - S/D RESPECTIVE MPF AFTERBURNER
- F16 - S/D RESPECTIVE MPF BURNER
- F17 - STOP FEED
- MALFUNCTION

B8:011/

- P17 - S/D PFS-COOL-114A FAN B (NOTE 1)
- P16 - S/D PFS-COOL-114A FAN A (NOTE 1)
- P15 - S/D PFS-COOL-114B FAN B (NOTE 1)
- P14 - S/D PFS-COOL-114B FAN A (NOTE 1)
- P13 - OPEN QUENCH EMERG. PRW (NOTE 1)
- P12 - S/D WATER RETURN PUMP
- P11 - BKUP BRINE PUMP ON (NOTE 1)
- P10 - BKUP CLEAN LIQ PUMP ON (NOTE 1)
- P07 - SPARE
- P06 - S/D BRINE PUMPS
- P05 - S/D CLEAN LIQUOR PUMPS
- P04 - S/D 1ST & 2ND STAGE ID FAN
- P03 - SPARE
- P02 - BYPASS CARBON FILTER (NOTE 1)
- P01 - S/D IST STAGE ID FAN
- P00 - S/D 2ND STAGE ID FAN
- PREALARM

ITEM NUM	TAG NUMBER	DESCRIPTION	SET POINT	17	16	15	14	13	12	11	10	07	06	05	04	03	02	01	00	17	16	15	14	13	12	11	10	07	06	05	04	03	02	01	00	REMARKS	ALARM BIT B001:XX/XX	MASK WORD B8:XX
157	114 PDAH 487D	PFS-FILT-113 2nd CARBON FILT BANK	3.5 in wc																																X	SP per RFI S-ALL-232.	5051/02	NA
158	114 PDAH 487E	PFS-FILT-113 2nd HEPA FILTER BANK	4.0 in wc																																X	SP per RFI S-ALL-232.	5051/04	NA
159	114 PDAH 487F	PFS-FILT-113 OVERALL DP	16 in wc																																X	SP per RFI S-ALL-232.	5051/06	NA
160	114 PDAH 510	PFS-COOL-114A CLEAN LIQ COOLER	20 psid																																X	SP per RFI S-ALL-232.	0850/02	NA
161	114 PDAL 510	PFS-COOL-114A CLEAN LIQ COOLER	8 psid																																X	SP per RFI S-ALL-232.	0850/00	NA
162	114 TAH 522	PFS-COOL-114B CLEAN LIQ COOLER	135°F																																X	SP per RFI S-ALL-232.	0850/16	NA
163	114 TAL 522	PFS-COOL-114B CLEAN LIQ COOLER	100°F																			X	X													SP per RFI S-ALL-232. Instant alarm, 120-sec delay for cooler S/D (see FAWB Note B-20).	0850/14	NA
164	114 XSH 523	PFS-COOL-114B FAN B VIBRATION	See NOTE 8																																X	5 sec delay (vendor info shows additional hardwired startup time delay relay)	0820/06	NA
165	114 XSHH 524	PFS-COOL-114B FAN B VIBRATION	See NOTE 8																			X														5 sec delay (vendor info shows additional hardwired startup time delay relay)	0820/16	NA
166	114 XSH 525	PFS-COOL-114B FAN A VIBRATION	See NOTE 8																																X	5 sec delay (vendor info shows additional hardwired startup time delay relay)	0820/04	NA
167	114 XSHH 526	PFS-COOL-114B FAN A VIBRATION	See NOTE 8																				X													5 sec delay (vendor info shows additional hardwired startup time delay relay)	0820/14	NA
168	114 SAH 527A	PFS-COOL-114B FAN B SPEED	66 Hz																			X														SP per RFI S-ALL-232 (66Hz = 1980 rpm).	0851/06	NA
169	114 SAH 528A	PFS-COOL-114B FAN A SPEED	66 Hz																				X													SP per RFI S-ALL-232 (66Hz = 1980 rpm).	0851/04	NA
170	114 TAH 539	PFS-COOL-114A CLEAN LIQ COOLER	135°F																																X	SP per RFI S-ALL-232.	0850/12	NA
171	114 TAL 539	PFS-COOL-114A CLEAN LIQ COOLER	100°F																	X	X															SP per RFI S-ALL-232. Instant alarm, 120-sec delay for cooler S/D (see FAWB Note B-20).	0850/10	NA
172	114 XSH 541	PFS-COOL-114A FAN B VIBRATION	See NOTE 8																																X	5 sec delay (vendor info shows additional hardwired startup time delay relay)	0820/02	NA
173	114 XSHH 542	PFS-COOL-114A FAN B VIBRATION	See NOTE 8																	X																5 sec delay (vendor info shows additional hardwired startup time delay relay)	0820/12	NA
174	114 XSH 543	PFS-COOL-114A FAN A VIBRATION	See NOTE 8																																X	5 sec delay (vendor info shows additional hardwired startup time delay relay)	0820/00	NA
175	114 XSHH 544	PFS-COOL-114A FAN A VIBRATION	See NOTE 8																		X															5 sec delay (vendor info shows additional hardwired startup time delay relay)	0820/10	NA
176	114 SAH 545A	PFS-COOL-114A FAN B SPEED	66 Hz																	X																SP per RFI S-ALL-232 (66Hz = 1980 rpm).	0851/02	NA
177	114 SAH 546A	PFS-COOL-114A FAN A SPEED	66 Hz																		X															SP per RFI S-ALL-232 (66Hz = 1980 rpm).	0851/00	NA
178	114 XA 552	PFS-COOL-114A FAN A	TROUBLE																		X															On time delay. Alarm generated by XSHH-544 or VFD in fault lockout. VFD internally configured to stop motor (see RFI C-PBCDF-002).	0821/00	NA

PBCDF METAL PARTS FURNACE (MPF) POLLUTION ABATEMENT SYSTEM (PAS) AND PAS FILTER SYSTEM (PFS)

PBCDF MPF PAS/PFS

ALARM AND INTERLOCK MATRIX

PBCDF MPF PAS/PFS

P&IDs: PB-1-D-528, PB-6-D-504, -505, -523, -526, -527 and -528
PLC: ICS-CONR-113; INTERLOCK: I-8

F00 - SPARE
F01 - SPARE
F02 - S/D COOLING CONVEYOR
F03 - S/D UNLOAD CONVEYOR
F04 - STOP ZONE 1 TIMER
F05 - STOP ZONE 2 TIMER
F06 - STOP ZONE 3 TIMER
F07 - S/D DISCHARGE AIRLOCK CONVEYOR
F10 - S/D ZONE 3 CONVEYOR
F11 - S/D ZONE 2 CONVEYOR
F12 - S/D ZONE 1 CONVEYOR
F13 - S/D CHARGE AIRLOCK CONVEYOR
F14 - S/D COMBUSTION AIR BLOWER
F15 - S/D RESPECTIVE MPF AFTERBURNER
F16 - S/D RESPECTIVE MPF BURNER
F17 - STOP FEED
MALFUNCTION

P17 - S/D PFS-COOL-114A FAN B (NOTE 1)
P16 - S/D PFS-COOL-114A FAN A (NOTE 1)
P15 - S/D PFS-COOL-114B FAN B (NOTE 1)
P14 - S/D PFS-COOL-114B FAN A (NOTE 1)
P13 - OPEN QUENCH EMERG. PRW (NOTE 1)
P12 - S/D WATER RETURN PUMP
P11 - BKUP BRINE PUMP ON (NOTE 1)
P10 - BKUP CLEAN LIQ PUMP ON (NOTE 1)
P07 - SPARE
P06 - S/D BRINE PUMPS
P05 - S/D CLEAN LIQUOR PUMPS
P04 - S/D 1ST & 2ND STAGE ID FAN
P03 - SPARE
P02 - BYPASS CARBON FILTER (NOTE 1)
P01 - S/D IST STAGE ID FAN
P00 - S/D 2ND STAGE ID FAN
PREALARM

ITEM NUM	TAG NUMBER	DESCRIPTION	SET POINT		B8:010/ 17	16	15	14	13	12	11	10	07	06	05	04	03	02	01	00	B8:011/ 17	16	15	14	13	12	11	10	07	06	05	04	03	02	01	00	REMARKS	ALARM BIT B001:XX/XX	MASK WORD B8:XX
179	MON ACAM 129	ACAMS COMMON STACK	NOTE 5		X																																RCRA AWFCO MPF 17. See NOTE 3. Stop feed for DFS, LIC, & MPF. DICO from ICS-CONR-112.	B4:31/00	496
180	MON ACAM 129	ACAMS COMMON STACK	MALF	X	X																																RCRA AWFCO MPF 17. See NOTE 3. Stop feed for DFS, LIC, & MPF. DICO from ICS-CONR-112.	B4:31/00	496
181	MON ACAM 129	ACAMS COMMON STACK	OFFLINE		X																																RCRA AWFCO MPF 17. See NOTE 3. Stop feed for DFS, LIC, & MPF. DICO from ICS-CONR-112.	B4:31/00	496
182	MON ACAM 129	ACAMS COMMON STACK	NOT STAGGERED		X																																RCRA AWFCO MPF 17. See NOTE 3. Stop feed for DFS, LIC, & MPF. DICO from ICS-CONR-112.	B4:31/00	496
183	MON ACAM 167	ACAMS MPF PAS	NOTE 5		X																																RCRA AWFCO MPF 16. See NOTE 3.	4620/06	510
184	MON ACAM 167	ACAMS MPF PAS	MALF	X	X																																RCRA AWFCO MPF 16. See NOTE 3.	4620/06	510
185	MON ACAM 167	ACAMS MPF PAS	OFFLINE		X																																RCRA AWFCO MPF 16. See NOTE 3.	4620/06	510
186		BRA TANKS LVL HI-HI / UNAVAILABLE	DICO				X	X					X																								RCRA AWFCO MPF 18. See BRA FAWB for tag #s and setpoints.	B4:23/01	210
187		MPF PAS/PFS NORMAL	NOT NORMAL				X	X					X																									B601/00	252

NOTE 1: P02, P10, P11, P13, P14, P15, P16, and P17 responses are not part of the deathwish relay. These responses are included as column headings for presentation clarity.
NOTE 2: The PBCDF CEMS alarm configuration is based on the response to RFI S-ALL-249 and does not reflect the configuration shown on the referenced versions of the P&IDs.
NOTE 3: RCRA AWFCO setpoints from 1-15-99 PBCDF RCRA permit Table VII-13 - Metal Parts Furnace Waste-Feed Cutoff Parameters. Some setpoints may be modified based on trial burn results.
NOTE 4: 24-LSHHH-244 additional interlocks: 1) close 24-XV-226 and inhibit timer activation, 2) close 24-XY-250B/D, 3) close 24-XY-264B/D. Also when controllers are in AUTO, 1) close 24-LV-243, 2) close 24-LV-245, 3) close 24-AV-247, 4) close 24-AV-224.
NOTE 5: ACAMS RCRA AWFCO setpoints are 1 ASC (allowable stack concentration), which are (mg/m3) : GB= 0.0003, HD/HT= 0.03, and VX=0.0003.
NOTE 6: PAS exhaust blower vibration alarms reflect the current design. Per RFI C-ANCDF-005, the blower foundation design requires that the foundation vibration be < 1 mil double amplitude. This requirment was the basis for recommended setpoints in RFI S-ALL-0232. The vibration alarm setpoints may be changed, or new alarms added, to meet the foundation vibration design limits.
NOTE 7: At the Oct 2000 ANCDF PAS/PFS review meetings, the ANCDF PFS gas reheater exhaust moisture alarm configuration was modified. These changes have been incorporated in the ANCDF design. The changes are also being carried forward to PBCDF, but have not yet been implemented. Therefore, the moisture alarms listed in this matrix reflect the ANCDF design configuration and do not match the PBCDF design documentation.
NOTE 8: After the Oct 2000 AN PAS/PFS review meeting, the DSIC investigated the clean liquor air cooler vibration alarm setpoints. They found that the Murphy vibration switches are set by turning an uncalibrated screw. Specific vibration units could not be determined. The high vibration switch is set by turning the screw 1/4 turn past its start-up trip point and the high-high switch is set by turning the screw 1/2 turn past its start-up trip point.

TOCDF DEACTIVATION FURNACE SYSTEM (DFS) POLLUTION ABATEMENT SYSTEM (PAS)

TOCDF **DFS PAS**

ALARM AND INTERLOCK MATRIX

P&IDs: TE-6-D-506, -507, -508, -527, EG-6-D-506, -507
PLC: ICS-CONR-112; INTERLOCK: I-10

TOCDF **DFS PAS**

F00 - SPARE
F01 - CLOSE ISOLATION VALVES
F02 - SHUTDOWN KILN LUBE OIL
F03 - SHUTDOWN HEATED DISCHARGE CONVEYOR
F04 - SHUTDOWN HEATED DISCHARGE CONVEYOR HEATERS
F05 - SHUTDOWN KILN DRIVE
F06 - OSCILLATE KILN DRIVE
F07 - SHUTDOWN AFTERBURNER COMBUSTION AIR BLOWER
F10 - SHUTDOWN AFTERBURNER #2
F11 - SHUTDOWN AFTERBURNER #1
F12 - SHUTDOWN KILN COMBUSTION AIR BLOWER
F13 - SHUTDOWN KILN BURNER
F14 - CLOSE KILN SHROUD AIR DAMPERS
F15 - OPEN KILN SHROUD AIR DAMPERS
F16 - SPARE
F17 - STOP FEED
MALFUNCTION

P17 - SPARE
P16 - SPARE
P15 - SPARE
P14 - SPARE
P13 - SHUTDOWN DEMISTER WTR RETURN PUMP
P12 - SWITCHOVER BRINE PUMP TO BACK-UP (NOTE 1)
P11 - SWITCHOVER CLEAN LIQ PUMP TO BACK-UP (NOTE 1)
P10 - SPARE
P07 - SHUTDOWN BRINE PUMPS
P06 - SHUTDOWN CLEAN LIQUOR PUMPS
P05 - SPARE
P04 - OPEN BLEED AIR VALVE
P03 - SPARE
P02 - SHUTDOWN LUBE OIL PUMPS
P01 - SHUTDOWN ID FAN 1ST STAGE
P00 - SHUTDOWN ID FAN 2ND STAGE
PREALARM

ITM	TAG NUMBER	DESCRIPTION	SETPOINT		B8:010/ 17	16	15	14	13	12	11	10	07	06	05	04	03	02	01	00	B8:011/ 17	16	15	14	13	12	11	10	07	06	05	04	03	02	01	00		REMARKS	ALARM BIT B001:XX/XX
1	16-AAH-059	EXHAUST GAS CO	100 ppm		X																																	RCRA AWFCO. 1 hr rolling avg (see NOTE 2), corrected to 7% O2, dry volume. Shown on P&ID as 16-ASH-059.	1050/00
2	16-XS-059	EXHAUST GAS CO MALF	MALF	X	X																																	RCRA AWFCO on malfunction alarm only if 24-AIT-207 is also in malfunction or is in "calibrate" mode. Alarm active only when combined fuel flow to kiln and afterburner > 100 scfm.	1021/02 1251/12
3	16/24-HS-059A/207A	BOTH DFS PAS CO ANALYZERS IN CAL	OFFLINE		X																																		1222/14
4	16-AAH-175	EXHAUST GAS 02	15%		X																																	RCRA AWFCO.	1250/16
5	16-AAL-175	EXHAUST GAS 02	3%		X																																	RCRA AWFCO. Shown on P&ID as 16-ASL-175.	1021/04
6	16-XS-175	EXHAUST GAS 02	MALF	X	X																																	RCRA AWFCO on malfuntion alarm only if 24-AIT-206 is also in malfunction or is in "calibrate" mode.	1021/06 1251/10
7	16/24-HS-175A/206A	BOTH DFS PAS 02 ANALYZERS IN CAL	OFFLINE		X																																	1222/16
8	16-AAL-781H	DFS PAS CO2 COMBUSTION EFF. [CO2/(CO2+CO)]	99.90%		X																																	TSCA. 3 min delay. Alarm on combustion efficiency less than 99.9% continuously for 3 minutes.	1052/00
9	16-AAL-781I	DFS PAS CO2 COMBUSTION EFF. [CO2/(CO2+CO)]	99.90%																																	X	Instantaneous alarm.	1052/04
10	16-XS-781	DFS PAS CO2	MALF	X	X																																	TSCA	1022/12
11	16-XS-781B	DFS PAS CO2	MALF	X	X																																	TSCA	1022/14
12	16-HS-781A/781B	BOTH DFS PAS C02 ANALYZERS IN CAL	OFFLINE		X																																	TSCA	1222/12
13	24-TSHH-001	QUENCH OVERHEAD	200°F		X																																	RCRA AWFCO. Open 24-TV-001, emergency quench spray.	1420/00
14	24-FAL-002	BRINE TO QUENCH	200 gpm		X																																	5 sec delay.	1450/00
15	24-PDAH-003	SCRUBBER MIST ELIMINATOR DELTA P	2 in wc																																	X		1651/06
16	24-FAL-006	VENTURI BRINE FEED	300 gpm		X																																	RCRA AWFCO. 30 sec delay.	1850/02
17	24-AAD-007	BRINE pH A&B DIFFERENCE	>0.5 pH																																	X	0.5 pH difference between probes	1851/04
18	24-AAH-007	BRINE pH	9.5 pH																																	X	10 sec delay after pump startup.	1850/12
19	24-AAL-007	BRINE pH PRE ALARM	7.5 pH																																	X		1851/06
20	24-AALL-007	BRINE pH	7.0 pH		X																																RCRA AWFCO. 10 sec delay after pump startup. Listed in TE-SOP-003 as 24-AAL-007.	1850/10
21	24-PDAH-007	VENTURI BRINE FILTER	10 psid																																	X		1850/14
22	24-PDAH-008	VENTURI DELTA P	SP+10 in wc																																	X		1850/06
23	24-PDAL-008	VENTURI DELTA P	25 in wc																																	X		1850/04
24	24-PDALL-008	VENTURI DELTA P	20 in wc		X																																RCRA AWFCO.	1851/00

TOCDF DEACTIVATION FURNACE SYSTEM (DFS) POLLUTION ABATEMENT SYSTEM (PAS)

TOCDF **DFS PAS**

ALARM AND INTERLOCK MATRIX

P&IDs: TE-6-D-506, -507, -508, -527, EG-6-D-506, -507
PLC: ICS-CONR-112; INTERLOCK: I-10

TOCDF **DFS PAS**

F00 - SPARE
F01 - CLOSE ISOLATION VALVES
F02 - SHUTDOWN KILN LUBE OIL
F03 - SHUTDOWN HEATED DISCHARGE CONVEYOR
F04 - SHUTDOWN HEATED DISCHARGE CONVEYOR HEATERS
F05 - SHUTDOWN KILN DRIVE
F06 - OSCILLATE KILN DRIVE
F07 - SHUTDOWN AFTERBURNER COMBUSTION AIR BLOWER
F10 - SHUTDOWN AFTERBURNER #2
F11 - SHUTDOWN AFTERBURNER #1
F12 - SHUTDOWN KILN COMBUSTION AIR BLOWER
F13 - SHUTDOWN KILN BURNER
F14 - CLOSE KILN SHROUD AIR DAMPERS
F15 - OPEN KILN SHROUD AIR DAMPERS
F16 - SPARE
F17 - STOP FEED
MALFUNCTION

P17 - SPARE
P16 - SPARE
P15 - SPARE
P14 - SPARE
P13 - SHUTDOWN DEMISTER WTR RETURN PUMP
P12 - SWITCHOVER BRINE PUMP TO BACK-UP (NOTE 1)
P11 - SWITCHOVER CLEAN LIQ PUMP TO BACK-UP (NOTE 1)
P10 - SPARE
P07 - SHUTDOWN BRINE PUMPS
P06 - SHUTDOWN CLEAN LIQUOR PUMPS
P05 - SPARE
P04 - OPEN BLEED AIR VALVE
P03 - SPARE
P02 - SHUTDOWN LUBE OIL PUMPS
P01 - SHUTDOWN ID FAN 1ST STAGE
P00 - SHUTDOWN ID FAN 2ND STAGE
PREALARM

ITM	TAG NUMBER	DESCRIPTION	SETPOINT	B8:010/ 17	16	15	14	13	12	11	10	07	06	05	04	03	02	01	00	B8:011/ 17	16	15	14	13	12	11	10	07	06	05	04	03	02	01	00	PREALARM	REMARKS	ALARM BIT B001:XX/XX
25	24-LAH-009	QUENCH TOWER	1 in																																	X	10 sec delay.	1450/04
26	24-LAHH-009	QUENCH TOWER	4 in		X			X	X	X	X		X		X	X																					Alarm shuts off brine spray to quench tower, and PRW makeup to quench brine. Input to PAS NORMAL relay.	1450/02
27	24-LAH-010	SCRUBBER TOWER BOTTOM SUMP	41 in wc		X			X	X		X	X		X		X	X							X													Requires 24-LAH-010 and 24-LSHH-032 for shutdown. OPEN I-lock for 24-XV-026. Input to PAS NORMAL relay.	1650/16
28	24-LAL-010	SCRUBBER TOWER BOTTOM SUMP	16 in wc		X			X	X		X	X		X		X	X										X										Input to PAS NORMAL relay. Requires 24-LAL-010 and 24-LSLL-024 for shutdown.	1650/14
29	24-PAL-011	QUENCH BRINE PUMPS DISCHARGE	80 psig																						X												10 sec delay after pump startup.	1850/00
30	24-PALL-011	QUENCH BRINE PUMPS DISCHARGE	75 psig		X																																RCRA AWFCO. 10 sec delay after pump startup.	1830/01
31	24-XA-013	BRINE PUMP 106 MALF	MALF	X																					X												Switchover to secondary pump on malfunction alarm when PAS-PUMP-106 is selected as primary.	1860/11
32	24-FISL-017	BRINE PUMP 106 SEAL WATER	0.15 gpm																																		5 sec delay. S/D PAS-PUMP-106 which will cause 24-XA-013 to alarm.	1820/00
33	24-XA-019	BRINE PUMP 107 MALF	MALF	X																					X												Switchover to secondary pump on malfunction alarm when PAS-PUMP-107 is selected as primary.	1862/11
34	24-FISL-023	BRINE PUMP 107 SEAL WATER	0.15 gpm																																		3 sec delay. S/D PAS-PUMP-107 which will cause 24-XA-019 to alarm.	1820/02
35	24-LSLL-024	SCRUBBER TOWER BOTTOM SUMP	16 in wc		X			X	X		X	X		X		X	X										X										3 sec delay. Input to PAS NORMAL relay. Requires 24-LAL-010 and 24-LSLL-024 for shutdown.	1620/00
36	24-PDAH-025	SCRUBBER PACKED BED DELTA P	6 in wc																																X			1651/10
37	24-FAL-030	SCRUBBER CLEAN LIQUOR FLOW	SP-10%																																X	45 sec delay after pump startup. 5 sec delay for alarm. SP is normally 1000 gpm.	1650/10
38	24-FALL-030	SCRUBBER CLEAN LIQ. FLOW LO-LO	750 gpm		X																																RCRA AWFCO.	1650/06
39	24-LAL-031	SCRUBBER CHIMNEY TRAY	24 in wc		X																							X									Requires 24-LAL-031 and 24-LSLL-381 for shutdown.	1650/12
40	24-LSHH-032	SCRUBBER TOWER BOTTOM SUMP	64 in wc		X			X	X		X	X		X		X	X							X													3 sec dalay. Requires 24-LAH-010 and 24-LSHH-032 for deathwish shutdown. Input to PAS NORMAL relay. See NOTE 3 for additional interlocks.	1620/02
41	24-DAH-033	BRINE DENSITY	1.18 sg																																X			1850/16
42	24-DAHH-033	BRINE DENSITY	1.20 sg		X																																RCRA AWFCO.	1851/02
43	24-AAD-034	CLEAN LIQUOR pH A&B DIFFERENCE	>0.5 pH																																	X	0.5 pH difference between probes	1668/10
44	24-AAH-034	CLEAN LIQUOR pH	9.5 pH																																	X	45 sec delay after pump startup.	1651/02
45	24-AAL-034	pH PRE ALARM	7.5 pH																																	X		1669/00
46	24-AALL-034	CLEAN LIQUOR pH	7.0 pH																																		45 sec delay after pump startup.	1651/00

TOCDF DEACTIVATION FURNACE SYSTEM (DFS) POLLUTION ABATEMENT SYSTEM (PAS)

TOCDF **DFS PAS**

ALARM AND INTERLOCK MATRIX

P&IDs: TE-6-D-506, -507, -508, -527, EG-6-D-506, -507
PLC: ICS-CONR-112; INTERLOCK: I-10

TOCDF **DFS PAS**

F00 - SPARE
F01 - CLOSE ISOLATION VALVES
F02 - SHUTDOWN KILN LUBE OIL
F03 - SHUTDOWN HEATED DISCHARGE CONVEYOR
F04 - SHUTDOWN HEATED DISCHARGE CONVEYOR HEATERS
F05 - SHUTDOWN KILN DRIVE
F06 - OSCILLATE KILN DRIVE
F07 - SHUTDOWN AFTERBURNER COMBUSTION AIR BLOWER
F10 - SHUTDOWN AFTERBURNER #2
F11 - SHUTDOWN AFTERBURNER #1
F12 - SHUTDOWN KILN COMBUSTION AIR BLOWER
F13 - SHUTDOWN KILN BURNER
F14 - CLOSE KILN SHROUD AIR DAMPERS
F15 - OPEN KILN SHROUD AIR DAMPERS
F16 - SPARE
F17 - STOP FEED
MALFUNCTION

P17 - SPARE
P16 - SPARE
P15 - SPARE
P14 - SPARE
P13 - SHUTDOWN DEMISTER WTR RETURN PUMP
P12 - SWITCHOVER BRINE PUMP TO BACK-UP (NOTE 1)
P11 - SWITCHOVER CLEAN LIQ PUMP TO BACK-UP (NOTE 1)
P10 - SPARE
P07 - SHUTDOWN BRINE PUMPS
P06 - SHUTDOWN CLEAN LIQUOR PUMPS
P05 - SPARE
P04 - OPEN BLEED AIR VALVE
P03 - SPARE
P02 - SHUTDOWN LUBE OIL PUMPS
P01 - SHUTDOWN ID FAN 1ST STAGE
P00 - SHUTDOWN ID FAN 2ND STAGE
PREALARM

ITM	TAG NUMBER	DESCRIPTION	SETPOINT	B8:010/ 17	16	15	14	13	12	11	10	07	06	05	04	03	02	01	00	B8:011/ 17	16	15	14	13	12	11	10	07	06	05	04	03	02	01	00	REMARKS	ALARM BIT B001:XX/XX
47	24-DAH-035	CLEAN LIQUOR DENSITY	SP + 0.03																																X	SP=setpoint entered in controller by operator	1651/04
48	24-DAHH-035	CLEAN LIQUOR DENSITY	SP + 0.05																																	SP=setpoint entered in controller by operator	1651/12
49	24-PAL-036	CLEAN LIQUOR DISCHARGE	40 psig																							X										45 sec delay after pump startup. 2 sec delay for alarm.	1650/00
50	24-PALL-036	CLEAN LIQUOR DISCHARGE	30 psig		X																															RCRA AWFCO. 45 sec delay after pump startup.	1650/04
51	24-XA-040	CLEAN LIQUOR PUMP 108 MALF	MALF	X																						X										Switchover to secondary pump on malfunction alarm when PAS-PUMP-108 is selected as primary.	1660/11
52	24-FISL-042	CLEAN LIQUOR PUMP 108 SEAL WTR	0.15 gpm																																	3 sec delay. S/D PAS-PUMP-108 if selected as primary, which will cause 24-XA-040 to alarm.	1620/04
53	24-XA-046	CLEAN LIQUOR PUMP 109 MALF	MALF	X																						X										Switchover to secondary pump on malfunction alarm when PAS-PUMP-109 selected as primary.	1662/11
54	24-FISL-048	CLEAN LIQUOR PUMP 109 SEAL WTR	0.15 gpm																																	3 sec delay. S/D PAS-PUMP-109 if selected as primary, which will cause 24-XA-046 to alarm.	1620/06
55	24-PDAH-051	QUENCH BRINE FILTER	10 psid																																X		1450/06
56	24-LSLL-061	MPF/DFS SPARE DEMISTER SUMP LEVEL	2.5 in wc																					X												DICO from CONR-113. Active when spare demister aligned to DFS. See MPF A&I matrix for additonal MPF/DFS spare demister alarms.	B4:33/01
57	24-XA-065	ID FAN MALFUNCTION 2ND STAGE	MALF	X	X																													X		Start I-lock for 2nd stage motor. Alarm not shown on P&ID.	1263/11
58	24-XS-068	ID FAN LUBE OIL TROUBLE	MALF	X																															X		1222/02
59	24-ASH-076	EXHAUST GAS NOx	100 ppm																																X	3 sec delay.	1222/06
60	24-XS-076	EXHAUST GAS NOx MALF	MALF	X																															X	3 sec delay.	1222/04
61	24-TSH-077	ID FAN WINDING TEMP. SECOND STAGE	340°F		X																													X		Alarm on HI temp for any of 24-TSH-077A-F.	1220/00
62	24-XSH-080	ID FAN VIBRATION SECOND STAGE	0.5 in/sec		X																													X		Setpoint needs to be verified.	1220/06
63	24-AAH-206	EXHAUST GAS O2	15%		X																																1220/10
64	24-AAL-206	EXHAUST GAS O2	3%		X																															RCRA AWFCO. Shown on P&ID as 24-ASL-206.	1250/14
65	24-XS-206	EXHAUST GAS O2 MALF	MALF	X	X																															RCRA AWFCO on malfuntion alarm only if 16-AIT-175 is also in malfunction or is in "calibrate" mode.	1220/12 1251/10
66	24-AAH-207	EXHAUST GAS CO	100 ppm		X																															RCRA AWFCO. 1 hr rolling avg (see NOTE 2), corrected to 7% O2, dry volume. Shown on P&ID as 16-ASH-207.	1250/06
67	24-XS-207	EXHAUST GAS CO MALF	MALF	X	X																															RCRA AWFCO on malfuntion alarm only if 16-AIT-059 is also in malfunction or is in "calibrate" mode. Alarm active only when combined fuel flow to primary and secondary > 100 scfm.	1220/04 1251/12

TOCDF DEACTIVATION FURNACE SYSTEM (DFS) POLLUTION ABATEMENT SYSTEM (PAS)

TOCDF **DFS PAS**

ALARM AND INTERLOCK MATRIX

P&IDs: TE-6-D-506, -507, -508, -527, EG-6-D-506, -507
PLC: ICS-CONR-112; INTERLOCK: I-10

TOCDF **DFS PAS**

F00 - SPARE
F01 - CLOSE ISOLATION VALVES
F02 - SHUTDOWN KILN LUBE OIL
F03 - SHUTDOWN HEATED DISCHARGE CONVEYOR
F04 - SHUTDOWN HEATED DISCHARGE CONVEYOR HEATERS
F05 - SHUTDOWN KILN DRIVE
F06 - OSCILLATE KILN DRIVE
F07 - SHUTDOWN AFTERBURNER COMBUSTION AIR BLOWER
F10 - SHUTDOWN AFTERBURNER #2
F11 - SHUTDOWN AFTERBURNER #1
F12 - SHUTDOWN KILN COMBUSTION AIR BLOWER
F13 - SHUTDOWN KILN BURNER
F14 - CLOSE KILN SHROUD AIR DAMPERS
F15 - OPEN KILN SHROUD AIR DAMPERS
F16 - SPARE
F17 - STOP FEED
MALFUNCTION

P17 - SPARE
P16 - SPARE
P15 - SPARE
P14 - SPARE
P13 - SHUTDOWN DEMISTER WTR RETURN PUMP
P12 - SWITCHOVER BRINE PUMP TO BACK-UP (NOTE 1)
P11 - SWITCHOVER CLEAN LIQ PUMP TO BACK-UP (NOTE 1)
P10 - SPARE
P07 - SHUTDOWN BRINE PUMPS
P06 - SHUTDOWN CLEAN LIQUOR PUMPS
P05 - SPARE
P04 - OPEN BLEED AIR VALVE
P03 - SPARE
P02 - SHUTDOWN LUBE OIL PUMPS
P01 - SHUTDOWN ID FAN 1ST STAGE
P00 - SHUTDOWN ID FAN 2ND STAGE
PREALARM

ITM	TAG NUMBER	DESCRIPTION	SETPOINT	B8:010/ 17	16	15	14	13	12	11	10	07	06	05	04	03	02	01	00	B8:011/ 17	16	15	14	13	12	11	10	07	06	05	04	03	02	01	00	PREALARM	REMARKS	ALARM BIT B001:XX/XX
68	24-PDAH-312	DEMISTER CANDLES DELTA P	15 in wc																																	X		0650/04
69	24-PDAHH-312	DEMISTER CANDLES DELTA P	20 in wc	X																																		0650/06
70	24-LSHH-313	DEMISTER ACID WASH LEVEL	60 in wc																																		3 sec delay. "PAS Normal" input.	0620/02
71	24-LAH-314	DEMISTER SUMP	12 in wc																																	X		0650/02
72	24-LAHH-314	DEMISTER SUMP	14 in wc																																	X		0650/10
73	24-LAL-314	DEMISTER SUMP	4 in wc																																	X		0650/00
74	24-LSLL-315	DEMISTER SUMP LEVEL SWITCH	2.5 in wc																					X													3 sec delay. Active when DFS demister aligned to DFS.	0620/00
75	24-LSHH-347	PAS SUMP PUMP 110	84 in																																		Start PAS-PUMP-110. Shutdown feeding sump pumps.	0620/04
76	24-FSL-373	QUENCH EMERGENCY WATER FLOW LOV	10 gpm																																	X	3 sec delay. Active only when 24-TV-001 is open.	1420/02
77	24-TAH-374	QUENCH TO VENTURI	200°F																																	X		1450/10
78	24-TAHH-374	QUENCH TO VENTURI	225°F	X																																	24-TSHH-001 redundancy (see FAWB Note B-7). Open 24-TV-001, emergency quench spray.	1450/14
79	24-TAHHH-374	QUENCH TO VENTURI	250°F	X				X		X	X																										24-TSHHH-375 redundancy (see FAWB Note B-7). Open 24-TV-001, emergency quench spray.	1450/16
80	24-TAL-374	QUENCH TO VENTURI	10°F																																	X		1450/12
81	24-TSHHH-375	QUENCH TO VENTURI	250°F	X			X	X	X	X	X		X		X	X																					"PAS Normal" input.	1420/10
82	24-FSL-376	SCRUBBER PROCESS WATER	10 gpm																																	X	3 sec delay. Active only when 24-XV-026 is energized.	1620/10
83	24-LSLL-381	SCRUBBER CHIMNEY TRAY LVL SWITCH	3.5 in wc	X																								X									3 sec delay. Requires 24-LAL-031 and 24-LSLL-381 for shutdown.	1620/12
84	24-FSL-383	ID FAN LUBE OIL SUPPLY LOW FLOW	0.15 gpm																																		2 sec delay. Hardwired switchover to back-up lube-oil pump.	1221/02
85	24-FSLL-383	ID FAN FIRST STAGE LUBE OIL	0.10 gpm	X																														X			3 sec delay.	1221/04
86	24-FSL-384	ID FAN SECOND STAGE LUBE OIL	0.15 gpm																																		Local alarm only. Hardwired switchover to back-up lube-oil pump.	NA
87	24-FSLL-384	ID FAN SECOND STAGE LUBE OIL	0.10 gpm	X																															X		3 sec delay.	1221/06
88	24-IAH-387	ID FAN OVER CURRENT SECOND STAGE	76 amp	X																															X		45 sec delay on fan startup.	1250/02
89	24-IAL-387	ID FAN MOTOR SECOND STAGE	31 amp	X																																	5 sec delay on fan startup.	1250/10
90	24-FSL-430	MINIMUM FLOW FOR PURGE	9000 scfm																																	X	3 sec delay.	1620/14
91	24-FSLL-430	EXHAUST GAS LO-LO FLOW	1000 scfm																																	X	Input to 2/3 logic for 24-FSLL-9430 (Ref: TEMP-2561-DFS). Alarm based on Sept 2001 PLC code.	1621/13
92	24-TSH-448	ID FAN BEARING TEMP FIRST STAGE	180°F	X																														X			3 sec delay.	1221/10
93	24-TSH-449	ID FAN BEARING TEMP. SECOND STAGE	180°F	X																															X		3 sec delay.	1221/12
94	24-PDSH-463	ID FAN LUBE OIL FILT DELTA PRESS HI A	15 psig																																		Local alarm only. Input to 24-XS-068, common trouble alarm.	NA

TOCDF DEACTIVATION FURNACE SYSTEM (DFS) POLLUTION ABATEMENT SYSTEM (PAS)

TOCDF **DFS PAS**

ALARM AND INTERLOCK MATRIX

P&IDs: TE-6-D-506, -507, -508, -527, EG-6-D-506, -507
PLC: ICS-CONR-112; INTERLOCK: I-10

TOCDF **DFS PAS**

F00 - SPARE
F01 - CLOSE ISOLATION VALVES
F02 - SHUTDOWN KILN LUBE OIL
F03 - SHUTDOWN HEATED DISCHARGE CONVEYOR
F04 - SHUTDOWN HEATED DISCHARGE CONVEYOR HEATERS
F05 - SHUTDOWN KILN DRIVE
F06 - OSCILLATE KILN DRIVE
F07 - SHUTDOWN AFTERBURNER COMBUSTION AIR BLOWER
F10 - SHUTDOWN AFTERBURNER #2
F11 - SHUTDOWN AFTERBURNER #1
F12 - SHUTDOWN KILN COMBUSTION AIR BLOWER
F13 - SHUTDOWN KILN BURNER
F14 - CLOSE KILN SHROUD AIR DAMPERS
F15 - OPEN KILN SHROUD AIR DAMPERS
F16 - SPARE
F17 - STOP FEED
MALFUNCTION

P17 - SPARE
P16 - SPARE
P15 - SPARE
P14 - SPARE
P13 - SHUTDOWN DEMISTER WTR RETURN PUMP
P12 - SWITCHOVER BRINE PUMP TO BACK-UP (NOTE 1)
P11 - SWITCHOVER CLEAN LIQ PUMP TO BACK-UP (NOTE 1)
P10 - SPARE
P07 - SHUTDOWN BRINE PUMPS
P06 - SHUTDOWN CLEAN LIQUOR PUMPS
P05 - SPARE
P04 - OPEN BLEED AIR VALVE
P03 - SPARE
P02 - SHUTDOWN LUBE OIL PUMPS
P01 - SHUTDOWN ID FAN 1ST STAGE
P00 - SHUTDOWN ID FAN 2ND STAGE
PREALARM

ITM	TAG NUMBER	DESCRIPTION	SETPOINT	B8:010/ 17	16	15	14	13	12	11	10	07	06	05	04	03	02	01	00	B8:011/ 17	16	15	14	13	12	11	10	07	06	05	04	03	02	01	00	PREALARM	REMARKS	ALARM BIT B001:XX/XX
95	24-PDSH-467	ID FAN LUBE OIL FILT DELTA PRESS HI B	15 psig																																		Local alarm only. Input to 24-XS-068, common trouble alarm.	NA
96	24-TSH-484	ID FAN LUBE OIL SUPPLY TEMP HIGH	120°F																																		Local alarm only. Input to 24-XS-068, common trouble alarm.	NA
97	24-LSLL-562	ID FAN LUBE OIL RESERVOIR	13.2 gal		X																												X	X	X			1221/00
98	24-PDAH-655	CLEAN LIQUOR FILTER DELTA P	10 psid																																	X		1650/02
99	24-LSL-680	ID FAN LUBE OIL RESERVOIR	18 gal																																		Local alarm only. Input to 24-XS-068, common trouble alarm.	NA
100	24-ZS-752B	BLEED AIR VALVE NOT CLOSED	NOT CLOSED		X																																	0605/00
101	24-FISL-755	DEMISTER WATER RETURN PUMP SEAL W	0.15 gpm																					X														0620/12
102	24-TSHH-792	ID FAN LO. SUPPLY HI-HI TEMP	130°F																																		3 sec delay. I-10 interlock shown on P&ID.	1221/14
103	24-PSL-793	ID FAN LUBE OIL DISCHARGE	25 psig																																		Local alarm only. Hardwired switchover to back-up lube-oil pump.	NA
104	24-PSLL-793	ID FAN LUBE OIL SUPPLY	15 psig		X																												X				10 sec delay after pump startup.	1220/16
105	24-XA-955	EMERGENCY BLOWER INLET DAMPER	MALF	X																																		0861/11
106	24-XA-956	EMERGENCY BLOWER OUTLET DAMPER	MALF	X																																		0862/11
107	24-PSH-959	ID FAN NEGATIVE PRESSURE	UP: -9 in wc DWN -12 in wc																																		Switchover for emergency blower (i.e. opens 24-XV-955 & -956).	1220/14
108	24-XSH-962	EMERG. BLOWER VIBRATION	0.5 in/sec																																	X		0820/00
109	24-TSH-966	ID FAN WINDING TEMP. FIRST STAGE	340°F		X																													X			Alarm on HI temp for any of 24-TSH-966A-F.	1221/16
110	24-IAH-967	ID FAN OVER CURRENT FIRST STAGE	76 amp		X																													X			45 sec delay on fan startup.	1250/04
111	24-IAL-967	ID FAN MOTOR FIRST STAGE	31 amp		X																																5 sec delay on fan startup.	1250/12
112	24-XSH-968	ID FAN VIBRATION 1ST STAGE	0.5 in/sec		X																													X			Verify setpoint.	1222/00
113	24-XA-970	ID FAN MALFUNCTION 1ST STAGE	MALF	X	X																													X			Start I-lock for 1st stage motor. Alarm tag is 24-ZX-970 in code and on P&ID.	1261/11
114	24-TAH-9103	ID FAN OUTLET TEMP.	260°F																																	X		1251/01
115	24-TAHH-9103	ID FAN OUTLET TEMP.	280°F																																	X		1251/03
116	24-FSLL-9430	EXHAUST GAS LO-LO FLOW	1000 scfm	X				X		X	X																										Requires 2/3 logic from 24-FSLL-430, 9430A, 9430B. 2 sec delay for stop feed. BMS 3-P running interlock. Alarm based on Sept 2001 PLC code (Ref: TEMP-2561-DFS). See DFS FAWB for more info.	1620/16
117	24-FSLL-9430A	EXHAUST GAS LO-LO FLOW	1000 scfm																																	X	Input to 2/3 logic for 24-FSLL-9430 (Ref: TEMP-2561-DFS). Alarm based on Sept 2001 PLC code.	1621/07

TOCDF DEACTIVATION FURNACE SYSTEM (DFS) POLLUTION ABATEMENT SYSTEM (PAS)

TOCDF **DFS PAS**

ALARM AND INTERLOCK MATRIX

P&IDs: TE-6-D-506, -507, -508, -527, EG-6-D-506, -507
PLC: ICS-CONR-112; INTERLOCK: I-10

TOCDF **DFS PAS**

F00 - SPARE
F01 - CLOSE ISOLATION VALVES
F02 - SHUTDOWN KILN LUBE OIL
F03 - SHUTDOWN HEATED DISCHARGE CONVEYOR
F04 - SHUTDOWN HEATED DISCHARGE CONVEYOR HEATERS
F05 - SHUTDOWN KILN DRIVE
F06 - OSCILLATE KILN DRIVE
F07 - SHUTDOWN AFTERBURNER COMBUSTION AIR BLOWER
F10 - SHUTDOWN AFTERBURNER #2
F11 - SHUTDOWN AFTERBURNER #1
F12 - SHUTDOWN KILN COMBUSTION AIR BLOWER
F13 - SHUTDOWN KILN BURNER
F14 - CLOSE KILN SHROUD AIR DAMPERS
F15 - OPEN KILN SHROUD AIR DAMPERS
F16 - SPARE
F17 - STOP FEED
MALFUNCTION

P17 - SPARE
P16 - SPARE
P15 - SPARE
P14 - SPARE
P13 - SHUTDOWN DEMISTER WTR RETURN PUMP
P12 - SWITCHOVER BRINE PUMP TO BACK-UP (NOTE 1)
P11 - SWITCHOVER CLEAN LIQ PUMP TO BACK-UP (NOTE 1)
P10 - SPARE
P07 - SHUTDOWN BRINE PUMPS
P06 - SHUTDOWN CLEAN LIQUOR PUMPS
P05 - SPARE
P04 - OPEN BLEED AIR VALVE
P03 - SPARE
P02 - SHUTDOWN LUBE OIL PUMPS
P01 - SHUTDOWN ID FAN 1ST STAGE
P00 - SHUTDOWN ID FAN 2ND STAGE
PREALARM

ITM	TAG NUMBER	DESCRIPTION	SETPOINT		B8:010/ 17	16	15	14	13	12	11	10	07	06	05	04	03	02	01	00	B8:011/ 17	16	15	14	13	12	11	10	07	06	05	04	03	02	01	00		REMARKS	ALARM BIT B001:XX/XX
118	24-FSLL-9430B	EXHAUST GAS LO-LO FLOW	1000 scfm																																		X	Input to 2/3 logic for 24-FSLL-9430 (Ref: TEMP-2561-DFS). Alarm based on Sept 2001 PLC code.	1621/11
119	24-XS-9913	TOTAL STACK FLOW - MALFUNCTION	MALF	X																																	X		1222/10
120	ACAMS PAS-701	ACAM COMMON STACK	0.2 ASC		X																																	RCRA AWFCO. Stop feed for DFS, LICs, and MPF. See NOTE 4.	2620/06
121	ACAMS PAS-701	ACAM COMMON STACK	MALF	X	X																																	RCRA AWFCO. Stop feed for DFS, LICs, and MPF.	2620/06
122	ACAMS PAS-701	ACAM COMMON STACK	OFFLINE		X																																	RCRA AWFCO. Stop feed for DFS, LICs, and MPF.	2620/06
123	ACAMS PAS-701	ACAM COMMON STACK	NOT STAGGERED		X																																	RCRA AWFCO. Stop feed for DFS, LICs, and MPF.	1251/14
124	ACAMS PAS-702	ACAM DFS PAS	MALF	X	X																																	RCRA AWFCO.	2619/06
125	ACAMS PAS-702	ACAM DFS PAS	OFFLINE		X																																	RCRA AWFCO.	2619/06
126	ACAMS PAS-702	ACAM DFS PAS	0.2 ASC		X																																	RCRA AWFCO. See NOTE 4.	2619/06
127		BOTH ID FANS NOT RUNNING	NOT RUNNING					X																															1261/13 1263/13
128		BOTH ID FANS AND EMERG. ID FAN	NOT RUNNING		X					X			X																										1261/13 1263/13 0860/13
129		24-XY-380A/-380C IN MANUAL	IN MANUAL		X																																	Stop feed when both brine pH loops are in MANUAL mode. See FAWB Note B-16.	1864/16 1866/16
130		BRA TANKS LVL HI HI / UNAVAILABLE	DICO		X																																	RCRA AWFCO. See BRA FAWB for tag #s and setpoints. DICO from ICS-CONR-108.	B4:23/01
131		DFS PAS NORMAL	NOT NORMAL																																				0605/03

NOTE 1: P11 and P12 responses are not part of the deathwish relay. They are included as column headings for presentation clarity.
NOTE 2: One hour rolling average is composed of the 60 most recent one-minute averages. Each one-minute average is composed of the 4 most recent instantaneous CO readings at 15-sec intervals.
NOTE 3: 24-LSHH-032 also closes 24-XV-026 and inhibit timers activation. When controllers are in AUTO, 24-LSHH-032 : 1) closes 24-LV-031, 2) closes 24-LV-010, 3) closes 24-AV-034, 4) closes 24-AV-007.
NOTE 4: Alarm settings are 0.2 times the allowable stack concentration (ASC) for each chemical agent. The setpoints are (mg/m3): GB=0.00006, H/HD/HT=0.006 and VX=0.00006.

TOCDF LIQUID INCINERATOR (LIC) POLLUTION ABATEMENT SYSTEM (PAS)

TOCDF LIC PAS

ALARM AND INTERLOCK MATRIX

TOCDF LIC PAS

P&IDs: TE-1-D-527/1, -547/1, TE-6-D-501, -502, -511, -512, -517/1, -517/2, EG-6-D-501, -511
PLCs: ICS-CONR-114 (LIC 1), ICS-CONR-119 (LIC 2); INTERLOCKs: I-7 (LIC 1), I-22 (LIC 2)

F00 - SPARE
F01 - SPARE
F02 - SPARE
F03 - SPARE
F04 - SHUTDOWN AGENT PUMPS
F05 - LOCKOUT SECONDARY BURNER (NOTE 1)
F06 - LOCKOUT PRIMARY BURNER (NOTE 1)
F07 - INHIBIT FUEL OIL PURGE OF AGENT LINE
F10 - SHUTDOWN SECONDARY COMB AIR BLOWER
F11 - SHUTDOWN PRIMARY COMB AIR BLOWER
F12 - SPARE
F13 - CLOSE DECON/PRW VALVE
F14 - STOP DECON FEED/SWITCH TO PROCESS WATER
F15 - STOP AGENT FEED
F16 - SHUTDOWN SECONDARY BURNER
F17 - SHUTDOWN PRIMARY BURNER
MALFUNCTION

P17 - SPARE
P16 - SPARE
P15 - SPARE
P14 - SPARE
P13 - SPARE
P12 - SHUTDOWN DEMISTER WTR RETURN PUMP
P11 - SWITCH BRINE PUMP TO BACK-UP (NOTE 1)
P10 - SWITCH CLEAN LIQ PUMP TO BACK-UP (NOTE 1)
P07 - SPARE
P06 - SHUTDOWN BRINE PUMPS
P05 - SHUTDOWN CLEAN LIQUOR PUMPS
P04 - SHUTDOWN ID FAN (BOTH STAGES)
P03 - SPARE
P02 - SHUTDOWN LUBE OIL PUMPS
P01 - SHUTDOWN ID FAN 1ST STAGE
P00 - SHUTDOWN ID FAN 2ND STAGE
PREALARM

ITM	LIC#1 TAG NUMBER	LIC#2 TAG NUMBER	DESCRIPTION	SETPOINT	B8:010/ 17	16	15	14	13	12	11	10	07	06	05	04	03	02	01	00	B8:011/ 17	16	15	14	13	12	11	10	07	06	05	04	03	02	01	00	PREALARM	REMARKS	ALARM BIT B001:XX/XX
1	13-AAH-083	13-AAH-778	EXHAUST GAS CO	100 ppm				X	X				X																									RCRA AWFCO. 1 hr rolling avg (see NOTE 2), corrected to 7% O2, dry volume. LIC 1 alarm also labeled in code as 13-AAHH-083.	1051/10
2	13-ASHH-083	13-ASHH-778	EXHAUST GAS CO	100 ppm																																	X	Shown on P&ID as 24-ASH-083 [778].	1020/12
3	13-XS-083	13-XS-778	EXHAUST GAS CO MALF	MALF	X			X	X				X																									RCRA AWFCO on malfuntion alarm only if 24-AIT-078 [716] is also in malfunction or is in "calibrate" mode. Alarm active only when combined fuel flow to primary and secondary > 100 scfm.	1020/14 1264/15
4	13/24-HS-083A/078A	13/24-HS-778A/716A	BOTH LIC PAS CO ANALYZERS IN CAL	OFFLINE				X	X				X																										1264/10
5	13-AAH-229	13-AAH-798	EXHAUST GAS 02	15%				X	X				X																									RCRA AWFCO. Shown on P&ID as 13-ASH-229 [798].	1023/00
6	13-AAL-229	13-AAL-798	EXHAUST GAS 02	3%				X	X				X																									RCRA AWFCO. Shown on P&ID as 13-ASL-229 [798].	1021/12
7	13/24-HS-229A/210A	13/24-HS-798A/717A	BOTH LIC PAS 02 ANALYZERS IN CAL	OFFLINE				X	X				X																										1264/00
8	13-XS-229	13-XS-798	EXHAUST GAS 02	MALF	X			X	X				X																									RCRA AWFCO on malfuntion alarm only if 24-AIT-210 [717] is also in malfunction or is in "calibrate" mode.	1021/14 1264/05
9	24-TSH-058	24-TSH-711	ID FAN WINDING TEMP. SECOND STAGE	340°F				X	X				X																						X			Alarm on HI temp for any of 24-TSH-058A-F.	1220/00
10	24-XS-060	24-XS-730	ID FAN LUBE OIL TROUBLE	MALF	X																																X		1222/02
11	24-XA-070	24-XA-712	BOTH ID FANS NOT RUNNING	NOT RUNNING		X	X	X	X			X	X	X																									I:210/03 I:210/05
12	24-XA-071	24-XA-713	ID FAN MALFUNCTION 2ND STAGE	MALF	X			X	X				X																							X		Start I-lock for 2nd stage motor. Alarm not shown on P&ID.	1263/11
13	24-AAH-078	24-AAH-716	EXHAUST GAS CO	100 ppm				X	X				X																									RCRA AWFCO. 1 hr rolling avg (see NOTE 2), corrected to 7% O2, dry volume. Alarm not shown on P&ID.	1250/06
14	24-ASH-078	24-ASH-716	EXHAUST GAS CO	SEE REMARKS																																		3 sec delay. SP could not be determined from reference documentation.	1220/02
15	24-XS-078	24-XS-716	EXHAUST GAS CO MALF	MALF	X			X	X				X																									RCRA AWFCO on malfuntion alarm only if 24-AIT-083 [778] is also in malfunction or is in "calibrate" mode. Alarm active only when combined fuel flow to primary and secondary > 100 scfm.	1220/04 1264/15

TOCDF LIQUID INCINERATOR (LIC) POLLUTION ABATEMENT SYSTEM (PAS)

TOCDF LIC PAS

ALARM AND INTERLOCK MATRIX

TOCDF LIC PAS

P&IDs: TE-1-D-527/1, -547/1, TE-6-D-501, -502, -511, -512, -517/1, -517/2, EG-6-D-501, -511
PLCs: ICS-CONR-114 (LIC 1), ICS-CONR-119 (LIC 2); INTERLOCKs: I-7 (LIC 1), I-22 (LIC 2)

F00 - SPARE
F01 - SPARE
F02 - SPARE
F03 - SPARE
F04 - SHUTDOWN AGENT PUMPS
F05 - LOCKOUT SECONDARY BURNER (NOTE 1)
F06 - LOCKOUT PRIMARY BURNER (NOTE 1)
F07 - INHIBIT FUEL OIL PURGE OF AGENT LINE
F10 - SHUTDOWN SECONDARY COMB AIR BLOWER
F11 - SHUTDOWN PRIMARY COMB AIR BLOWER
F12 - SPARE
F13 - CLOSE DECON/PRW VALVE
F14 - STOP DECON FEED/SWITCH TO PROCESS WATER
F15 - STOP AGENT FEED
F16 - SHUTDOWN SECONDARY BURNER
F17 - SHUTDOWN PRIMARY BURNER
MALFUNCTION

P17 - SPARE
P16 - SPARE
P15 - SPARE
P14 - SPARE
P13 - SPARE
P12 - SHUTDOWN DEMISTER WTR RETURN PUMP
P11 - SWITCH BRINE PUMP TO BACK-UP (NOTE 1)
P10 - SWITCH CLEAN LIQ PUMP TO BACK-UP (NOTE 1)
P07 - SPARE
P06 - SHUTDOWN BRINE PUMPS
P05 - SHUTDOWN CLEAN LIQUOR PUMPS
P04 - SHUTDOWN ID FAN (BOTH STAGES)
P03 - SPARE
P02 - SHUTDOWN LUBE OIL PUMPS
P01 - SHUTDOWN ID FAN 1ST STAGE
P00 - SHUTDOWN ID FAN 2ND STAGE
PREALARM

ITM	LIC#1 TAG NUMBER	LIC#2 TAG NUMBER	DESCRIPTION	SETPOINT	B8:010/ 17	16	15	14	13	12	11	10	07	06	05	04	03	02	01	00	B8:011/ 17	16	15	14	13	12	11	10	07	06	05	04	03	02	01	00	PREALARM	REMARKS	ALARM BIT B001:XX/XX
16	24-XAH-079	24-XAH-709	ID FAN VIBRATION SECOND STAGE	0.5 in/sec																																	X		1251/06
17	24-XSHH-079	24-XSHH-709	ID FAN VIBRATION SECOND STAGE	0.5 in/sec			X	X					X																									Setpoint needs to be verified. In code as 24-XSH-079 [709]. 24-XSHH-709 (LIC 2) also shuts down the ID fan 2nd stage.	1220/06
18	24-PDAH-082	24-PDAH-823	SCRUBBER MIST ELIMINATOR DELTA P	2 in wc																																	X		1651/06
19	24-DAH-083	24-DAH-835	BRINE DENSITY	SP + 0.03																																	X	SP=setpoint entered in controller by operator	1850/16
20	24-DAHH-083	24-DAHH-835	BRINE DENSITY	1.28 sg			X	X					X																									RCRA AWFCO. Equates to 80lb/ft3.	1851/02
21	24-FAL-084	24-FAL-827	BRINE TO QUENCH	60 gpm																																	X		1450/00
22	24-FAL-088	24-FAL-828	VENTURI BRINE FEED	100 gpm			X	X					X																									RCRA AWFCO. 10 sec delay.	1850/02
23	24-PDAH-089	24-PDAH-829	VENTURI BRINE FILTER	10.0 psid																																	X		1850/14
24	24-TSHH-089	24-TSHH-800	QUENCH OVERHEAD	225°F			X	X					X																									RCRA AWFCO. Open 24-TV-089 [800], emergency quench spray.	1420/00
25	24-PDAH-090	24-PDAH-814	VENTURI DELTA P	SP+10 in wc																																	X		1850/06
26	24-PDAL-090	24-PDAL-814	VENTURI DELTA P	25 in wc																																	X		1850/04
27	24-PDALL-090	24-PDALL-814	VENTURI DELTA P	20 in wc			X	X					X																									RCRA AWFCO.	1851/00
28	24-AAD-091	24-AAD-831	BRINE pH A&B DIFFERENT	>0.5 pH																																	X	0.5 pH difference between probes	1868/01
29	24-AAH-091	24-AAH-831	BRINE pH	9.5 pH																																	X		1850/12
30	24-AAL-091	24-AAL-831	BRINE pH PRE ALARM	7.5 pH																																	X		L1:1850/10 L2:1868/03
31	24-AALL-091	24-AALL-831	BRINE pH	7.0 pH			X	X					X																									RCRA AWFCO. Listed in TE-SOP-005 Appendix E as 24-AAL-091 [831].	L1:1851/04 L2:1850/10
32	24-AIT-091A/B	24-AIT-831A/B	BRINE pH	Calibrate			X	X					X																									Shutdown requires that AIT-091A [831A] and -091B [831B] are in calibrate mode. See FAWB Note B-16.	1864/13 1865/13
33	24-XA-094	24-XA-844	BRINE PUMP 111/211 MALF	MALF	X																					X												Switchover to secondary pump on malfunction alarm when PAS-PUMP-111 [211] is selected as primary.	1860/11
34	24-FISL-098	24-FISL-841	BRINE PUMP 111/211 SEAL WATER	0.15 gpm																																		3 sec delay. S/D PAS-PUMP-111 [211] if selected as primary, which will cause 24-XA-094 [844] to alarm.	1820/00
35	24-LSLL-099	24-LSLL-820	SCRUBBER TOWER BOTTOM SUMP LEV	20 in wc		X	X	X					X																X									3 sec delay. Input to PAS NORMAL relay. Requires 24-LAL-115 [818] and 24-LSLL-099 [820] for shutdown.	1620/00
36	24-PAL-100	24-PAL-838	QUENCH BRINE PUMPS DISCHARGE	70 psig																						X												3 sec delay after pump startup.	1850/00

TOCDF LIQUID INCINERATOR (LIC) POLLUTION ABATEMENT SYSTEM (PAS)

TOCDF LIC PAS

ALARM AND INTERLOCK MATRIX

TOCDF LIC PAS

P&IDs: TE-1-D-527/1, -547/1, TE-6-D-501, -502, -511, -512, -517/1, -517/2, EG-6-D-501, -511
PLCs: ICS-CONR-114 (LIC 1), ICS-CONR-119 (LIC 2); INTERLOCKs: I-7 (LIC 1), I-22 (LIC 2)

F00 - SPARE
F01 - SPARE
F02 - SPARE
F03 - SPARE
F04 - SHUTDOWN AGENT PUMPS
F05 - LOCKOUT SECONDARY BURNER (NOTE 1)
F06 - LOCKOUT PRIMARY BURNER (NOTE 1)
F07 - INHIBIT FUEL OIL PURGE OF AGENT LINE
F10 - SHUTDOWN SECONDARY COMB AIR BLOWER
F11 - SHUTDOWN PRIMARY COMB AIR BLOWER
F12 - SPARE
F13 - CLOSE DECON/PRW VALVE
F14 - STOP DECON FEED/SWITCH TO PROCESS WATER
F15 - STOP AGENT FEED
F16 - SHUTDOWN SECONDARY BURNER
F17 - SHUTDOWN PRIMARY BURNER
MALFUNCTION

P17 - SPARE
P16 - SPARE
P15 - SPARE
P14 - SPARE
P13 - SPARE
P12 - SHUTDOWN DEMISTER WTR RETURN PUMP
P11 - SWITCH BRINE PUMP TO BACK-UP (NOTE 1)
P10 - SWITCH CLEAN LIQ PUMP TO BACK-UP (NOTE 1)
P07 - SPARE
P06 - SHUTDOWN BRINE PUMPS
P05 - SHUTDOWN CLEAN LIQUOR PUMPS
P04 - SHUTDOWN ID FAN (BOTH STAGES)
P03 - SPARE
P02 - SHUTDOWN LUBE OIL PUMPS
P01 - SHUTDOWN ID FAN 1ST STAGE
P00 - SHUTDOWN ID FAN 2ND STAGE
PREALARM

ITM	LIC#1 TAG NUMBER	LIC#2 TAG NUMBER	DESCRIPTION	SETPOINT	B8:010/ 17	16	15	14	13	12	11	10	07	06	05	04	03	02	01	00	B8:011/ 17	16	15	14	13	12	11	10	07	06	05	04	03	02	01	00	PREALARM	REMARKS	ALARM BIT B001:XX/XX
37	24-PALL-100	24-PALL-838	QUENCH BRINE PUMPS DISCHARGE	40 psig			X	X					X																									RCRA AWFCO.	1830/16
38	24-XA-102	24-XA-848	BRINE PUMP 112/212 MALF	MALF	X																						X											Switchover to secondary pump on malfunction alarm when PAS-PUMP-112 [212] is selected as primary.	1862/11
39	24-FISL-106	24-FISL-845	BRINE PUMP 112/212 SEAL WATER	0.15 gpm																																		3 sec delay. S/D PAS-PUMP-112 [212] if selected as primary, which will cause 24-XA-102 [848] to alarm.	1820/02
40	24-PDAH-108	24-PDAH-822	SCRUBBER PACKED BED DELTA P	6 in wc																																	X		1651/10
41	24-FAL-112	24-FAL-825	SCRUBBER CLEAN LIQUOR FLOW	SP*0.9																																	X	SP is normally 500 gpm.	1650/10
42	24-FALL-112	24-FALL-825	SCRUBBER CLEAN LIQ. FLOW LO-LO	400 gpm			X	X					X																									RCRA AWFCO.	1650/06
43	24-LAL-113	24-LAL-824	SCRUBBER CHIMNEY TRAY	24 in wc			X	X					X																	X								Requires 24-LAL-113 [824] and 24-LSLL-411 [821] for shutdown.	1650/12
44	24-LSHH-114	24-LSHH-819	SCRUBBER TOWER BOTTOM SUMP LEVEL SWITCH	68 in wc		X	X	X	X				X													X												3 sec dalay. Requires 24-LAH-115 [818] and 24-LSHH-114 [819] for deathwish shutdown. Input to PAS NORMAL relay. See NOTE 3 for additional interlocks.	1620/02
45	24-LAH-115	24-LAH-818	SCRUBBER TOWER BOTTOM SUMP	56 in wc		X	X	X	X				X													X												Requires 24-LAH-115 [818] and 24-LSHH-114 [819] for shutdown. OPEN I-lock for 24-XV-092 [798]. Input to PAS NORMAL relay.	1650/16
46	24-LAL-115	24-LAL-818	SCRUBBER TOWER BOTTOM SUMP	30 in wc		X	X	X	X				X																X									Input to PAS NORMAL relay. Requires 24-LAL-115 [818] and 24-LSLL-099 [820] for shutdown.	1650/14
47	24-AAD-116	24-AAD-832	CLEAN LIQUOR pH A&B DIFFERENCE	>0.5 pH																																	X	0.5 pH difference between probes	1668/10
48	24-AAH-116	24-AAH-832	CLEAN LIQUOR pH	9.5 pH																																	X		1651/02
49	24-AAL-116	24-AAL-832	CLEAN LIQUOR PRE ALARM	7.5 pH																																	X		1669/00
50	24-AALL-116	24-AALL-832	CLEAN LIQUOR pH	7.0 pH																																			1651/00
51	24-DAH-117	24-DAH-826	CLEAN LIQUOR DENSITY	SP + 0.03																																	X	SP=setpoint entered in controller by operator	1651/04
52	24-DAHH-117	24-DAHH-826	CLEAN LIQUOR DENSITY	SP + 0.05																																		SP=setpoint entered in controller by operator	1651/12
53	24-XA-122	24-XA-851	CLEAN LIQUOR PUMP 113/213 MALF	MALF	X																						X											Switchover to secondary pump on malfunction alarm when PAS-PUMP-113 [213] is selected as primary.	1660/11
54	24-FISL-124	24-FISL-849	CLEAN LIQUOR PUMP 113/213 SEAL WT	0.15 gpm																																		3 sec delay. S/D PAS-PUMP-113 [213] if selected as primary, which will cause 24-XA-122 [851] to alarm.	1620/04

TOCDF LIQUID INCINERATOR (LIC) POLLUTION ABATEMENT SYSTEM (PAS)

TOCDF LIC PAS

ALARM AND INTERLOCK MATRIX

TOCDF LIC PAS

P&IDs: TE-1-D-527/1, -547/1, TE-6-D-501, -502, -511, -512, -517/1, -517/2, EG-6-D-501, -511
PLCs: ICS-CONR-114 (LIC 1), ICS-CONR-119 (LIC 2); INTERLOCKs: I-7 (LIC 1), I-22 (LIC 2)

F00 - SPARE
F01 - SPARE
F02 - SPARE
F03 - SPARE
F04 - SHUTDOWN AGENT PUMPS
F05 - LOCKOUT SECONDARY BURNER (NOTE 1)
F06 - LOCKOUT PRIMARY BURNER (NOTE 1)
F07 - INHIBIT FUEL OIL PURGE OF AGENT LINE
F10 - SHUTDOWN SECONDARY COMB AIR BLOWER
F11 - SHUTDOWN PRIMARY COMB AIR BLOWER
F12 - SPARE
F13 - CLOSE DECON/PRW VALVE
F14 - STOP DECON FEED/SWITCH TO PROCESS WATER
F15 - STOP AGENT FEED
F16 - SHUTDOWN SECONDARY BURNER
F17 - SHUTDOWN PRIMARY BURNER
MALFUNCTION

P17 - SPARE
P16 - SPARE
P15 - SPARE
P14 - SPARE
P13 - SPARE
P12 - SHUTDOWN DEMISTER WTR RETURN PUMP
P11 - SWITCH BRINE PUMP TO BACK-UP (NOTE 1)
P10 - SWITCH CLEAN LIQ PUMP TO BACK-UP (NOTE 1)
P07 - SPARE
P06 - SHUTDOWN BRINE PUMPS
P05 - SHUTDOWN CLEAN LIQUOR PUMPS
P04 - SHUTDOWN ID FAN (BOTH STAGES)
P03 - SPARE
P02 - SHUTDOWN LUBE OIL PUMPS
P01 - SHUTDOWN ID FAN 1ST STAGE
P00 - SHUTDOWN ID FAN 2ND STAGE
PREALARM

ITM	LIC#1 TAG NUMBER	LIC#2 TAG NUMBER	DESCRIPTION	SETPOINT	B8:010/ 17	16	15	14	13	12	11	10	07	06	05	04	03	02	01	00	B8:011/ 17	16	15	14	13	12	11	10	07	06	05	04	03	02	01	00	REMARKS	ALARM BIT B001:XX/XX
55	24-XA-128	24-XA-854	CLEAN LIQUOR PUMP 114/214 MALF	MALF	X																							X									Switchover to secondary pump on malfunction alarm when PAS-PUMP-114 [214] is selected as primary.	1662/11
56	24-PAL-129	24-PAL-839	CLEAN LIQUOR DISCHARGE	40 psig				X					X															X									10 sec delay after pump startup.	1650/00
57	24-PALL-129	24-PALL-839	CLEAN LIQUOR DISCHARGE	25 psig				X	X				X																								RCRA AWFCO. 10 sec delay after pump startup.	1650/04
58	24-FISL-131	24-FISL-852	CLEAN LIQUOR PUMP 114/214 SEAL WT	0.15 gpm																																	3 sec delay. S/D PAS-PUMP-114 [214] if selected as primary, which will cause 24-XA-128 [854] to alarm.	1620/06
59	24-LAH-132	24-LAH-810	QUENCH TOWER	1 in																																X		1450/04
60	24-LAHH-132	24-LAHH-810	QUENCH TOWER	4 in		X	X	X	X				X																								Alarm shuts off brine spray to quench tower, and PRW makeup to quench brine. Input to PAS NORMAL.	1450/02
61	24-LAH-143	24-LAH-864	DEMISTER SUMP	12 in wc																																X		0650/02
62	24-LAHH-143	24-LAHH-864	DEMISTER SUMP	14 in wc																																		0650/10
63	24-LAL-143	24-LAL-864	DEMISTER SUMP	4 in wc																																X		0650/00
64	24-LSLL-144	24-LSLL-865	DEMISTER SUMP LEVEL SWITCH	2.5 in wc																					X												3 sec delay. Also sets bit P07, which is not used in the code.	0620/00
65	24-LSHH-146	24-LSHH-866	DEMISTER SUMP	60 in wc																																	3 sec delay. "PAS Normal" input.	0620/02
66	24-PDAH-147	24-PDAH-867	DEMISTER CANDLES DELTA P	15 in wc																																X		0650/04
67	24-PDAHH-147	24-PDAHH-867	DEMISTER CANDLES DELTA P	20 in wc				X	X				X																									0650/12
68	24-LAH-161	24-LAH-161	SPARE DEMISTER SUMP	12 in wc																																X		0850/02
69	24-LAHH-161	24-LAHH-161	SPARE DEMISTER SUMP	14 in wc																																		0850/04
70	24-LAL-161	24-LAL-161	SPARE DEMISTER SUMP	4 in wc																																X		0850/00
71	24-LSLL-162	24-LSLL-162	SPARE DEMISTER SUMP LEVEL SWITCH	2.5 in wc																					X												3 sec delay. Active when LIC1 [LIC 2] is aligned with the spare demister. Also sets bit P07, which is not used in the code.	0820/00
72	24-LSHH-163	24-LSHH-163	SPARE DEMISTER SUMP LEVEL SWITCH	60 in wc																																	3 sec delay. "PAS Normal" input.	0820/02
73	24-PDAH-164	24-PDAH-164	SPARE DEMISTER CANDLES DELTA P	15 in wc																																X		0850/06
74	24-PDAHH-164	24-PDAHH-164	SPARE DEMISTER CANDLES DELTA P	20 in wc				X	X				X																								Active for LIC 1 only.	0850/10
75	24-AAH-210	24-AAH-717	EXHAUST GAS 02	15%				X	X				X																								RCRA AWFCO. Shown on P&ID as 13-ASH-210 [717].	1220/10
76	24-AAL-210	24-AAL-717	EXHAUST GAS 02	3%				X	X				X																								RCRA AWFCO. Shown on P&ID as 13-ASL-210 [717].	1221/14

TOCDF LIQUID INCINERATOR (LIC) POLLUTION ABATEMENT SYSTEM (PAS)

TOCDF LIC PAS

ALARM AND INTERLOCK MATRIX

TOCDF LIC PAS

P&IDs: TE-1-D-527/1, -547/1, TE-6-D-501, -502, -511, -512, -517/1, -517/2, EG-6-D-501, -511
PLCs: ICS-CONR-114 (LIC 1), ICS-CONR-119 (LIC 2); INTERLOCKs: I-7 (LIC 1), I-22 (LIC 2)

F00 - SPARE
F01 - SPARE
F02 - SPARE
F03 - SPARE
F04 - SHUTDOWN AGENT PUMPS
F05 - LOCKOUT SECONDARY BURNER (NOTE 1)
F06 - LOCKOUT PRIMARY BURNER (NOTE 1)
F07 - INHIBIT FUEL OIL PURGE OF AGENT LINE
F10 - SHUTDOWN SECONDARY COMB AIR BLOWER
F11 - SHUTDOWN PRIMARY COMB AIR BLOWER
F12 - SPARE
F13 - CLOSE DECON/PRW VALVE
F14 - STOP DECON FEED/SWITCH TO PROCESS WATER
F15 - STOP AGENT FEED
F16 - SHUTDOWN SECONDARY BURNER
F17 - SHUTDOWN PRIMARY BURNER
MALFUNCTION

P17 - SPARE
P16 - SPARE
P15 - SPARE
P14 - SPARE
P13 - SPARE
P12 - SHUTDOWN DEMISTER WTR RETURN PUMP
P11 - SWITCH BRINE PUMP TO BACK-UP (NOTE 1)
P10 - SWITCH CLEAN LIQ PUMP TO BACK-UP (NOTE 1)
P07 - SPARE
P06 - SHUTDOWN BRINE PUMPS
P05 - SHUTDOWN CLEAN LIQUOR PUMPS
P04 - SHUTDOWN ID FAN (BOTH STAGES)
P03 - SPARE
P02 - SHUTDOWN LUBE OIL PUMPS
P01 - SHUTDOWN ID FAN 1ST STAGE
P00 - SHUTDOWN ID FAN 2ND STAGE
PREALARM

ITM	LIC#1 TAG NUMBER	LIC#2 TAG NUMBER	DESCRIPTION	SETPOINT	B8:010/17	B8:010/16	B8:010/15	B8:010/14	B8:010/13	B8:010/12	B8:010/11	B8:010/10	B8:010/07	B8:010/06	B8:010/05	B8:010/04	B8:010/03	B8:010/02	B8:010/01	B8:010/00	B8:011/17	B8:011/16	B8:011/15	B8:011/14	B8:011/13	B8:011/12	B8:011/11	B8:011/10	B8:011/07	B8:011/06	B8:011/05	B8:011/04	B8:011/03	B8:011/02	B8:011/01	B8:011/00	PREALARM	REMARKS	ALARM BIT B001:XX/XX
77	24-XS-210	24-XS-717	EXHAUST GAS O2 MALF	MALF	X			X	X				X																									RCRA AWFCO on malfuntion alarm only if 13-AIT-229 [798] is also in malfunction or is in "calibrate" mode.	1220/12 1264/05
78	24-IAH-388	24-IAH-710	ID FAN OVER CURRENT 2ND STAGE	L1: 42 amp L2: 39 amp				X	X				X																						X		50 sec delay on startup. 30-sec delay for 24-IAH-388. 24-IAH-710 is alarm only.	L1:1250/02 L2:1250/00
79	NA	24-IAHH-710	ID FAN OVER CURRENT 2ND STAGE	42 amp				X	X				X																						X		50 sec delay on startup and 30 sec delay for alarm. Alarm not shown on P&ID.	1250/02
80	24-IAL-388	24-IAL-710	ID FAN MOTOR SECOND STAGE	18 amp				X	X				X																								5 sec delay on startup.	1250/10
81	24-FSL-391	24-FSL-801	QUENCH EMERGENCY FLOW NORMAL	10 gpm																																X	3 sec delay. Active only when 24-TV-089 [800] is open.	1420/02
82	24-TSHHH-396	24-TSHHH-817	QUENCH TO VENTURI	250°F		X	X	X	X				X																								"PAS Normal" input.	1420/10
83	24-TAH-397	24-TAH-816	QUENCH TO VENTURI	200°F																																X		1450/10
84	24-TAHH-397	24-TAHH-816	QUENCH TO VENTURI	225°F				X	X																												24-TSHH-089 [800] redundancy (see FAWB Note B-7). Open 24-TV-089 [800], emergency quench spray.	1450/12
85	24-TAHHH-397	24-TAHHH-816	QUENCH TO VENTURI	250°F		X	X	X	X																												24-TSHHH-396 [817] redundancy (see FAWB Note B-7). Open 24-TV-089 [800], emergency quench spray.	1450/14
86	24-FSL-398	24-FSL-799	SCRUBBER PROCESS WATER	10 gpm																																	3 sec delay. Active only when 24-XV-092 [798] is energized.	1620/10
87	24-LSLL-411	24-LSLL-821	SCRUBBER CHIMNEY TRAY LVL SWITCH	3.5 in wc				X	X				X																	X							10 sec delay. Requires 24-LAL-113 [824] and 24-LSLL-411 [821] for shutdown.	1620/12
88	24-FSL-431	24-FSL-902	MINIMUM FLOW FOR PURGE	1200 scfm																																X	15 sec delay for 24-FSL-431. 3 sec delay for 24-FSL-902. 24-FSL-902 indentified as 24-FSL-901 in code and on BMS drawings.	1620/14
89	24-FSLL-431	24-FSLL-902	EXHAUST GAS LO-LO FLOW	650 scfm				X	X				X	X	X																						3 sec delay for stop feed. BMS 3-P running interlock.	1620/16
90	24-TSHH-441	24-TSHH-438	ID FAN L.O. SUPPLY-HI HI TEMP	130°F																																	I-7 [I-22] interlock shown on P&ID.	1220/14
91	24-PSL-442	24-PSL-439	ID FAN LUBE OIL DISCHARGE	25 psig																																	Local alarm only. Hardwired switchover to back-up lube-oil pump.	NA
92	24-TAH-450	24-TAH-452	ID FAN BEARING TEMP FIRST STAGE	160°F																																X	Alarm on either 24-TIT-450A [452A] or 450B [452B] high.	1251/02 1251/04
93	24-TSHH-450	24-TSHH-452	ID FAN BEARING TEMP FIRST STAGE	180°F				X	X				X																					X			In code as TSH-450A/B [452A/B].	1221/10

TOCDF LIQUID INCINERATOR (LIC) POLLUTION ABATEMENT SYSTEM (PAS)

TOCDF LIC PAS

ALARM AND INTERLOCK MATRIX

TOCDF LIC PAS

P&IDs: TE-1-D-527/1, -547/1, TE-6-D-501, -502, -511, -512, -517/1, -517/2, EG-6-D-501, -511
PLCs: ICS-CONR-114 (LIC 1), ICS-CONR-119 (LIC 2); INTERLOCKs: I-7 (LIC 1), I-22 (LIC 2)

F00 - SPARE
F01 - SPARE
F02 - SPARE
F03 - SPARE
F04 - SHUTDOWN AGENT PUMPS
F05 - LOCKOUT SECONDARY BURNER (NOTE 1)
F06 - LOCKOUT PRIMARY BURNER (NOTE 1)
F07 - INHIBIT FUEL OIL PURGE OF AGENT LINE
F10 - SHUTDOWN SECONDARY COMB AIR BLOWER
F11 - SHUTDOWN PRIMARY COMB AIR BLOWER
F12 - SPARE
F13 - CLOSE DECON/PRW VALVE
F14 - STOP DECON FEED/SWITCH TO PROCESS WATER
F15 - STOP AGENT FEED
F16 - SHUTDOWN SECONDARY BURNER
F17 - SHUTDOWN PRIMARY BURNER
MALFUNCTION

P17 - SPARE
P16 - SPARE
P15 - SPARE
P14 - SPARE
P13 - SPARE
P12 - SHUTDOWN DEMISTER WTR RETURN PUMP
P11 - SWITCH BRINE PUMP TO BACK-UP (NOTE 1)
P10 - SWITCH CLEAN LIQ PUMP TO BACK-UP (NOTE 1)
P07 - SPARE
P06 - SHUTDOWN BRINE PUMPS
P05 - SHUTDOWN CLEAN LIQUOR PUMPS
P04 - SHUTDOWN ID FAN (BOTH STAGES)
P03 - SPARE
P02 - SHUTDOWN LUBE OIL PUMPS
P01 - SHUTDOWN ID FAN 1ST STAGE
P00 - SHUTDOWN ID FAN 2ND STAGE
PREALARM

ITM	LIC#1 TAG NUMBER	LIC#2 TAG NUMBER	DESCRIPTION	SETPOINT	B8:010/ 17	16	15	14	13	12	11	10	07	06	05	04	03	02	01	00	B8:011/ 17	16	15	14	13	12	11	10	07	06	05	04	03	02	01	00	PREALARM	REMARKS	ALARM BIT B001:XX/XX
94	24-TAH-451	24-TAH-453	ID FAN BEARING TEMP. SECOND STAGE	160°F																																	X	Alarm on either 24-TIT-451A [453A] or 451B [453B] high.	1251/10 1251/12
95	24-TSHH-451	24-TSHH-453	ID FAN BEARING TEMP. SECOND STAGE	180°F				X	X					X																						X		3 sec delay for 24-TSHH-451. 5 sec delay for 24-TSHH-453. In code as TSH-451A/B [453A/B].	1221/12
96	24-PDSH-464	24-PDSH-465	ID FAN LUBE OIL FILTER DELTA PRESS I	15 psig																																		Local alarm only. Input to 24-XS-60 [730], common trouble alarm.	NA
97	24-PDSH-468	24-PDSH-469	ID FAN LUBE OIL FILTER DELTA PRESS I	15 psig																																		Local alarm only. Input to 24-XS-60 [730], common trouble alarm.	NA
98	24-TSH-486	24-TSH-488	ID FAN LUBE OIL SUPPLY TEMP HIGH	125°F																																		Local alarm only. Input to 24-XS-60 [730], common trouble alarm.	NA
99	24-PDAH-583	24-PDAH-840	CLEAN LIQUOR FILTER DELTA P	10 psid																																X		1650/02
100	24-PSLL-659	24-PSLL-719	ID FAN LUBE OIL SUPPLY	15 psig				X	X					X																		X		X				10 sec delay after pump startup.	1220/16
101	24-LSLL-660	24-LSLL-721	ID FAN LUBE OIL RESERVOIR	13.2 gal				X	X					X																		X		X					1221/00
102	24-FSL-661	24-FSL-707	ID FAN LUBE OIL SUPPLY LOW FLOW	0.15 gpm																																		3 sec delay. Hardwired switchover to back-up lube-oil pump.	1221/02
103	24-FSLL-661	24-FSLL-707	ID FAN FIRST STAGE LUBE OIL	0.10 gpm				X	X					X																					X			3 sec delay.	1221/04
104	24-FSL-662	24-FSL-708	ID FAN SECOND STAGE LUBE OIL	0.15 gpm																																		Local alarm only. Hardwired switchover to back-up lube-oil pump.	NA
105	24-FSLL-662	24-FSLL-708	ID FAN SECOND STAGE LUBE OIL	0.10 gpm				X	X					X																						X		3 sec delay.	1221/06
106	24-LAL-685	24-LAL-897	ID FAN LUBE OIL RESERVOIR	18 gal																																		Local alarm only. Input to 24-XS-60 [730], common trouble alarm.	NA
107	24-ZS-750B	24-ZS-753B	BLEED AIR VALVE NOT CLOSED	NOT CLOSED				X	X					X																									0650/14
108	24-TSH-980	24-TSH-976	ID FAN WINDING TEMP. FIRST STAGE	340°F				X	X					X																					X			Alarm on HI temp for any of 24-TSH-980A-F.	1221/16
109	24-IAH-981	24-IAH-977	ID FAN OVER CURRENT FIRST STAGE	L1: 42 amp L2: 39 amp				X	X					X																					X			50 sec delay on startup. 30-sec delay for 24-IAH-981. 24-IAH-977 is alarm only.	L1:1250/04 L2:1251/14
110	NA	24-IAHH-977	ID FAN OVER CURRENT FIRST STAGE	42 amp				X	X					X																					X			50 sec delay on startup and 30 sec delay for alarm. Alarm not shown on P&ID.	1250/04
111	24-IAL-981	24-IAL-977	ID FAN MOTOR FIRST STAGE	18 amp				X	X					X																								5 sec delay on startup.	1250/12
112	24-XAH-982	24-XAH-978	ID FAN VIBRATION 1ST STAGE	0.5 in/sec																																X			1251/00
113	24-XSHH-982	24-XSHH-978	ID FAN VIBRATION 1ST STAGE	0.5 in/sec				X	X					X																					X			In code as XSH not XSHH.	1222/00
114	24-XA-983	24-XA-979	ID FAN MALFUNCTION 1ST STAGE	MALF	X			X	X					X																					X			Start I-lock for 1st stage motor. Alarm not shown on P&ID.	1261/11

TOCDF LIQUID INCINERATOR (LIC) POLLUTION ABATEMENT SYSTEM (PAS)

TOCDF LIC PAS

ALARM AND INTERLOCK MATRIX

TOCDF LIC PAS

P&IDs: TE-1-D-527/1, -547/1, TE-6-D-501, -502, -511, -512, -517/1, -517/2, EG-6-D-501, -511
PLCs: ICS-CONR-114 (LIC 1), ICS-CONR-119 (LIC 2); INTERLOCKs: I-7 (LIC 1), I-22 (LIC 2)

F00 - SPARE
F01 - SPARE
F02 - SPARE
F03 - SPARE
F04 - SHUTDOWN AGENT PUMPS
F05 - LOCKOUT SECONDARY BURNER (NOTE 1)
F06 - LOCKOUT PRIMARY BURNER (NOTE 1)
F07 - INHIBIT FUEL OIL PURGE OF AGENT LINE
F10 - SHUTDOWN SECONDARY COMB AIR BLOWER
F11 - SHUTDOWN PRIMARY COMB AIR BLOWER
F12 - SPARE
F13 - CLOSE DECON/PRW VALVE
F14 - STOP DECON FEED/SWITCH TO PROCESS WATER
F15 - STOP AGENT FEED
F16 - SHUTDOWN SECONDARY BURNER
F17 - SHUTDOWN PRIMARY BURNER
MALFUNCTION

P17 - SPARE
P16 - SPARE
P15 - SPARE
P14 - SPARE
P13 - SPARE
P12 - SHUTDOWN DEMISTER WTR RETURN PUMP
P11 - SWITCH BRINE PUMP TO BACK-UP (NOTE 1)
P10 - SWITCH CLEAN LIQ PUMP TO BACK-UP (NOTE 1)
P07 - SPARE
P06 - SHUTDOWN BRINE PUMPS
P05 - SHUTDOWN CLEAN LIQUOR PUMPS
P04 - SHUTDOWN ID FAN (BOTH STAGES)
P03 - SPARE
P02 - SHUTDOWN LUBE OIL PUMPS
P01 - SHUTDOWN ID FAN 1ST STAGE
P00 - SHUTDOWN ID FAN 2ND STAGE
PREALARM

ITM	LIC#1 TAG NUMBER	LIC#2 TAG NUMBER	DESCRIPTION	SETPOINT	B8:010/ 17	16	15	14	13	12	11	10	07	06	05	04	03	02	01	00	B8:011/ 17	16	15	14	13	12	11	10	07	06	05	04	03	02	01	00	PREALARM	REMARKS	ALARM BIT B001:XX/XX
115	24-FISL-994	24-FISL-731	DEMISTER WATER RETURN PUMP SEAL	0.15 gpm																						X													0620/12
116	24-TAH-9981	24-TAH-9982	ID FAN OUTLET TEMP	350°F																																	X		1250/14
117	24-TAHH-9981	24-TAHH-9982	ID FAN OUTLET TEMP	375°F																																			1250/16
118	ACAMS PAS-701	ACAMS PAS-701	ACAMS COMMON STACK	NOTE 4				X	X				X																									RCRA AWFCO. Stop feed for DFS, LICs, and MPF. DICO from ICS-CONR-112.	B4:31/00
119	ACAMS PAS-701	ACAMS PAS-701	ACAMS COMMON STACK	MALF	X			X	X				X																									RCRA AWFCO. Stop feed for DFS, LICs, and MPF. DICO from ICS-CONR-112.	B4:31/00
120	ACAMS PAS-701	ACAMS PAS-701	ACAMS COMMON STACK	OFFLINE				X	X				X																									RCRA AWFCO. Stop feed for DFS, LICs, and MPF. DICO from ICS-CONR-112.	B4:31/00
121	ACAMS PAS-701	ACAMS PAS-701	ACAMS COMMON STACK	NOT STAGGERED				X	X				X																									RCRA AWFCO. Stop feed for DFS, LICs, and MPF. DICO from ICS-CONR-112.	B4:31/00
122	ACAMS PAS-704	ACAMS PAS-705	ACAMS LIC PAS	MALF	X			X	X				X																									RCRA AWFCO.	L1:2420/06 L2:2020/06
123	ACAMS PAS-704	ACAMS PAS-705	ACAMS LIC PAS	OFFLINE				X	X				X																									RCRA AWFCO.	L1:2420/06 L2:2020/06
124	ACAMS PAS-704	ACAMS PAS-705	ACAMS LIC PAS	NOTE 4				X	X				X																									RCRA AWFCO.	L1:2420/06 L2:2020/06
125			BRA TANKS LVL HI HI / UNAVAILABLE	DICO				X	X				X																									RCRA AWFCO. See BRA FAWB for tag #s and setpoints. DICO from ICS-CONR-108.	B4:23/01
126			LIC#1 [LIC#2] PAS NORMAL	NOT NORMAL				X	X				X																									Also close 24-XV-062 [807] from recovered water tank.	0605/03

NOTE 1: F05, F06, P10, and P11 responses are not part of the deathwish relay. They are included as column headings for presentation clarity.
NOTE 2: One hour rolling average is composed of the 60 most recent one-minute averages. Each one-minute average is composed of the 4 most recent instantaneous CO readings at 15-sec intervals.
NOTE 3: 24-LSHH-114 [819] also closes 24-XV-062 [807], and closes 24-XV-092 [798] and inhibits timer activation. , When controllers are in AUTO, 24-LSHH-114[819]: 1) close 24-LV-113 [824], 2) close 24-LV-115 [818], 3) close 24-AV-116 [832], 4) close 24-AV-091 [831].
NOTE 4: Alarm settings are 0.2 times the allowable stack concentration (ASC) for each chemical agent. The setpoints are (mg/m3): GB=0.00006, H/HD/HT=0.006 and VX=0.00006.

TOCDF METAL PARTS FURNACE (MPF) POLLUTION ABATEMENT SYSTEM (PAS)

TOCDF MPF PAS

ALARM AND INTERLOCK MATRIX

P&IDs: TE-1-D-528, TE-6-D-504, -505, -527, EG-6-D-501, -511
PLC: ICS-CONR-113; INTERLOCK: I-8

TOCDF MPF PAS

F00 - SPARE
F01 - SPARE
F02 - S/D COOLING CONVEYOR
F03 - S/D UNLOAD CONVEYOR
F04 - STOP ZONE 1 TIMER
F05 - STOP ZONE 2 TIMER
F06 - STOP ZONE 3 TIMER
F07 - S/D DISCHARGE AIRLOCK CONVEYOR
F10 - S/D ZONE 3 CONVEYOR
F11 - S/D ZONE 2 CONVEYOR
F12 - S/D ZONE 1 CONVEYOR
F13 - S/D CHARGE AIRLOCK CONVEYOR
F14 - S/D COMBUSTION AIR BLOWER
F15 - S/D RESPECTIVE MPF AFTERBURNER
F16 - S/D RESPECTIVE MPF BURNER
F17 - STOP FEED
MALFUNCTION

P17 - SPARE
P16 - SPARE
P15 - SPARE
P14 - SPARE
P13 - SPARE
P12 - SHUTDOWN DEMISTER WTR RETURN PUMP
P11 - SWITCHOVER BRINE PUMP TO BACK-UP (NOTE 1)
P10 - SWITCHOVER CLEAN LIQ PUMP TO BACK-UP (NOTE 1)
P07 - SPARE
P06 - SHUTDOWN BRINE PUMPS
P05 - SHUTDOWN CLEAN LIQUOR PUMPS
P04 - SHUTDOWN ID FAN (BOTH STAGES)
P03 - OPEN BLEED AIR VALVE
P02 - SHUTDOWN LUBE OIL PUMPS
P01 - SHUTDOWN ID FAN 1ST STAGE
P00 - SHUTDOWN ID FAN 2ND STAGE
PREALARM

ITM	TAG NUMBER	DESCRIPTION	SETPOINT		B8:010/ 17	16	15	14	13	12	11	10	07	06	05	04	03	02	01	00	B8:011/ 17	16	15	14	13	12	11	10	07	06	05	04	03	02	01	00		REMARKS	ALARM BIT B001:XX/XX
1	14-AAH-082	EXHAUST GAS 02	15%		X																																	RCRA AWFCO. Shown on P&ID as 14-ASH-082.	1222/06
2	14-AAL-082	EXHAUST GAS 02	3%		X																																	RCRA AWFCO.	1020/00
3	14-XS-082	EXHAUST GAS 02	MALF	X	X																																	RCRA AWFCO on malfuntion alarm only if 24-AIT-670 is also in malfunction or is in "calibrate" mode.	1021/00 1205/06
4	14/24-HS-082A/670A	BOTH MPF PAS 02 ANALYZERS IN CAL	In Calib.		X																																		1265/10
5	14-AAH-384	EXHAUST GAS CO	100 ppm		X																																	RCRA AWFCO. 1 hr rolling avg (see NOTE 2), corrected to 7% O2, dry volume. Shown on P&ID as 14-ASH-384.	1050/12
6	14-ASH-384	EXHAUST GAS CO	100 ppm		X																																		1020/02
7	14-XS-384	EXHAUST GAS CO MALF	MALF	X	X																																	RCRA AWFCO on malfunction alarm only if 24-AIT-669 is also in malfunction or is in "calibrate" mode. Alarm active only when combined fuel flow to primary furnace and afterburner > 100 scfm.	1021/02 1205/10
8	14/24-HS-384A/669A	BOTH MPF PAS CO ANALYZERS IN CAL	In Calib.		X																																		1265/15
9	24-PDAH-053	MPF/DFS SPARE DEMISTER CANDLES DELTA P	15 in wc																																		X		5250/06
10	24-LSLL-061	MPFS/DFS SPARE DEMISTER SUMP LEVE	2.5 in wc																							X												5 sec delay. Active when spare demister aligned to	5220/00
11	24-LAH-067	MPF/DFS SPARE DEMISTER SUMP	12 in wc																																		X		5250/02
12	24-LAHH-067	MPF/DFS SPARE DEMISTER SUMP	14 in wc																																				5250/04
13	24-LAL-067	MPF/DFS SPARE DEMISTER SUMP	4 in wc																																				5250/00
14	24-DAH-216	BRINE DENSITY	SP + 0.03																																		X		1850/16
15	24-DAHH-216	BRINE DENSITY	1.28 sg		X																																	RCRA AWFCO. Equates to 80lb/ft3.	1851/02
16	24-FAL-217	BRINE TO QUENCH	60 gpm																																		X		1450/00
17	24-FAL-218	VENTURI BRINE FEED	50 gpm		X																																	RCRA AWFCO.	1850/02
18	24-PDAH-222	VENTURI DELTA P	SP + 10 in wc																																		X		1850/06
19	24-PDAL-222	VENTURI DELTA P	25 in wc																																		X		1850/04
20	24-PDALL-222	VENTURI DELTA P	20 in wc		X																																	RCRA AWFCO.	1851/00
21	24-FSL-223	QUENCH EMERGENCY WATER FLOW LOV	10 gpm																																		X	3 sec delay. Active only when 24-TV-223 is open.	1420/02
22	24-TSHH-223	QUENCH OVERHEAD	225°F																																			RCRA AWFCO. Open 24-TV-223, emergency quench spray.	1420/00
23	24-AAD-224	BRINE pH A&B DIFFERENCE	>0.5 pH																																		X	0.5 pH difference between probes	1868/01
24	24-AAH-224	BRINE pH	9.5 pH																																		X		1850/12
25	24-AAL-224	BRINE pH PRE ALARM	7.5 pH																																		X		1868/03
26	24-AALL-224	BRINE pH	7 pH		X																																	RCRA AWFCO.	1850/10

TOCDF METAL PARTS FURNACE (MPF) POLLUTION ABATEMENT SYSTEM (PAS)

TOCDF MPF PAS

ALARM AND INTERLOCK MATRIX

P&IDs: TE-1-D-528, TE-6-D-504, -505, -527, EG-6-D-501, -511
PLC: ICS-CONR-113; INTERLOCK: I-8

TOCDF MPF PAS

F00 - SPARE
F01 - SPARE
F02 - S/D COOLING CONVEYOR
F03 - S/D UNLOAD CONVEYOR
F04 - STOP ZONE 1 TIMER
F05 - STOP ZONE 2 TIMER
F06 - STOP ZONE 3 TIMER
F07 - S/D DISCHARGE AIRLOCK CONVEYOR
F10 - S/D ZONE 3 CONVEYOR
F11 - S/D ZONE 2 CONVEYOR
F12 - S/D ZONE 1 CONVEYOR
F13 - S/D CHARGE AIRLOCK CONVEYOR
F14 - S/D COMBUSTION AIR BLOWER
F15 - S/D RESPECTIVE MPF AFTERBURNER
F16 - S/D RESPECTIVE MPF BURNER
F17 - STOP FEED
MALFUNCTION

P17 - SPARE
P16 - SPARE
P15 - SPARE
P14 - SPARE
P13 - SPARE
P12 - SHUTDOWN DEMISTER WTR RETURN PUMP
P11 - SWITCHOVER BRINE PUMP TO BACK-UP (NOTE 1)
P10 - SWITCHOVER CLEAN LIQ PUMP TO BACK-UP (NOTE 1)
P07 - SPARE
P06 - SHUTDOWN BRINE PUMPS
P05 - SHUTDOWN CLEAN LIQUOR PUMPS
P04 - SHUTDOWN ID FAN (BOTH STAGES)
P03 - OPEN BLEED AIR VALVE
P02 - SHUTDOWN LUBE OIL PUMPS
P01 - SHUTDOWN ID FAN 1ST STAGE
P00 - SHUTDOWN ID FAN 2ND STAGE
PREALARM

ITM	TAG NUMBER	DESCRIPTION	SETPOINT	B8:010/ 17	16	15	14	13	12	11	10	07	06	05	04	03	02	01	00	B8:011/ 17	16	15	14	13	12	11	10	07	06	05	04	03	02	01	00	PREALARM	REMARKS	ALARM BIT B001:XX/XX
27	24-AIT-224A/B	BRINE pH LOOPS A & B IN CALIBRATE	IN CALIBRATE		X																																	1864/13 1865/13
28	24-PDAH-225	SCRUBBER PACKED BED DELTA P	12 in wc																																	X		1651/10
29	24-FSL-226	SCRUBBER PROCESS WATER	10 gpm																																		3 sec delay. Active only when 24-XV-226 is energized.	1620/10
30	24-XA-228	BRINE PUMP 102 MALF	MALF	X																						X											Switchover to secondary pump on malfunction alarm when PAS-PUMP-102 is selected as primary.	1860/11
31	24-FISL-231	BRINE PUMP 102 SEAL WATER	0.15 gpm																																		3 sec delay. S/D PAS-PUMP-102 if selected as primary, which will cause 24-XA-228 to alarm.	1820/00
32	24-PAL-233	QUENCH BRINE PUMPS DISCHARGE	85 psig																							X											10 sec delay after pump startup.	1850/00
33	24-PALL-233	QUENCH BRINE PUMPS DISCHARGE	70 psig		X																																RCRA AWFCO. 10 sec delay after pump startup.	1851/04
34	24-XA-235	BRINE PUMP 103 MALF	MALF	X																						X											Switchover to secondary pump on malfunction alarm when PAS-PUMP-103 is selected as primary.	1862/11
35	24-FISL-238	BRINE PUMP 103 SEAL WATER	0.15 gpm																																		3 sec delay. S/D PAS-PUMP-103 if selected as primary, which will cause 24-XA-235 to alarm.	1820/02
36	24-LAH-242	QUENCH TOWER	1 in																																	X		1450/04
37	24-LAHH-242	QUENCH TOWER	4 in		X	X	X																														Alarm shuts off brine spray to quench tower, and PRW makeup to quench brine. Input to PAS NORMAL.	1450/02
38	24-LAL-243	SCRUBBER CHIMNEY TRAY	24 in wc		X																								X								Requires 24-LAL-243 and 24-LSLL-513 for shutdown.	1650/12
39	24-LSHH-244	SCRUBBER TOWER BOTTOM SUMP	64 in wc		X	X	X																		X												3 sec dalay. Requires 24-LAH-245 and 24-LSHH-244 for deathwish shutdown. Input to PAS NORMAL relay. See NOTE 3 for additional interlocks.	1620/02
40	24-LAH-245	SCRUBBER TOWER BOTTOM SUMP	54 in wc		X	X	X																		X												Requires 24-LAH-245 and 24-LSHH-244 for shutdown. Input to PAS NORMAL relay.	1650/16
41	24-LAL-245	SCRUBBER TOWER BOTTOM SUMP	30 in wc		X	X	X																					X									Input to PAS NORMAL relay. Requires 24-LAL-245 and 24-LSLL-246 for shutdown.	1650/14
42	24-LSLL-246	SCRUBBER TOWER BOTTOM SUMP	16 in wc		X	X	X																					X									3 sec delay. Input to PAS NORMAL relay. Requires 24-LAL-245 and 24-LSLL-246 for shutdown.	1620/00
43	24-AAD-247	CLEAN LIQUOR pH A&B DIFFERENCE	>0.5 pH																																	X	0.5 pH difference between probes	1668/10
44	24-AAH-247	CLEAN LIQUOR pH	9.5 pH																																	X		1651/02
45	24-AAL-247	pH PRE ALARM	7.5 pH																																	X		1669/00
46	24-AALL-247	CLEAN LIQUOR pH	7 pH																																			1651/00
47	24-FAL-248	SCRUBBER CLEAN LIQUOR FLOW	SP-10%																																	X	SP is normally 500 gpm.	1650/10
48	24-FALL-248	SCRUBBER CLEAN LIQ. FLOW LO-LO	400 gpm		X																																RCRA AWFCO.	1650/06
49	24-DAH-249	CLEAN LIQUOR DENSITY	SP + 0.03																																	X	SP=setpoint entered in controller by operator	1651/04

TOCDF METAL PARTS FURNACE (MPF) POLLUTION ABATEMENT SYSTEM (PAS)

TOCDF MPF PAS

ALARM AND INTERLOCK MATRIX

P&IDs: TE-1-D-528, TE-6-D-504, -505, -527, EG-6-D-501, -511
PLC: ICS-CONR-113; INTERLOCK: I-8

TOCDF MPF PAS

F00 - SPARE
F01 - SPARE
F02 - S/D COOLING CONVEYOR
F03 - S/D UNLOAD CONVEYOR
F04 - STOP ZONE 1 TIMER
F05 - STOP ZONE 2 TIMER
F06 - STOP ZONE 3 TIMER
F07 - S/D DISCHARGE AIRLOCK CONVEYOR
F10 - S/D ZONE 3 CONVEYOR
F11 - S/D ZONE 2 CONVEYOR
F12 - S/D ZONE 1 CONVEYOR
F13 - S/D CHARGE AIRLOCK CONVEYOR
F14 - S/D COMBUSTION AIR BLOWER
F15 - S/D RESPECTIVE MPF AFTERBURNER
F16 - S/D RESPECTIVE MPF BURNER
F17 - STOP FEED
MALFUNCTION

P17 - SPARE
P16 - SPARE
P15 - SPARE
P14 - SPARE
P13 - SPARE
P12 - SHUTDOWN DEMISTER WTR RETURN PUMP
P11 - SWITCHOVER BRINE PUMP TO BACK-UP (NOTE 1)
P10 - SWITCHOVER CLEAN LIQ PUMP TO BACK-UP (NOTE 1)
P07 - SPARE
P06 - SHUTDOWN BRINE PUMPS
P05 - SHUTDOWN CLEAN LIQUOR PUMPS
P04 - SHUTDOWN ID FAN (BOTH STAGES)
P03 - OPEN BLEED AIR VALVE
P02 - SHUTDOWN LUBE OIL PUMPS
P01 - SHUTDOWN ID FAN 1ST STAGE
P00 - SHUTDOWN ID FAN 2ND STAGE
PREALARM

ITM	TAG NUMBER	DESCRIPTION	SETPOINT	B8:010/ 17	16	15	14	13	12	11	10	07	06	05	04	03	02	01	00	B8:011/ 17	16	15	14	13	12	11	10	07	06	05	04	03	02	01	00		REMARKS	ALARM BIT B001:XX/XX
50	24-DAHH-249	CLEAN LIQUOR DENSITY	SP + 0.05																																		SP=setpoint entered in controller by operator	1651/12
51	24-XA-254	CLEAN LIQUOR PUMP 104 MALF	MALF	X																							X										Switchover to secondary pump on malfunction alarm when PAS-PUMP-104 is selected as primary.	1660/11
52	24-FISL-256	CLEAN LIQUOR PUMP 104 SEAL WTR	0.15 gpm																																		3 sec delay. S/D PAS-PUMP-104 if selected as primary, which will cause 24-XA-254 to alarm.	1620/04
53	24-PAL-258	CLEAN LIQUOR DISCHARGE	40 psig																								X										10 sec delay after pump startup.	1650/00
54	24-PALL-258	CLEAN LIQUOR DISCHARGE	25 psig		X																																RCRA AWFCO. 10 sec delay after pump startup.	1650/04
55	24-XA-261	CLEAN LIQUOR PUMP 105 MALF	MALF	X																							X										Switchover to secondary pump on malfunction alarm when PAS-PUMP-105 selected as primary.	1662/11
56	24-FISL-263	CLEAN LIQUOR PUMP 105 SEAL WTR	0.15 gpm																																		3 sec delay. S/D PAS-PUMP-105 if selected as primary, which will cause 24-XA-261 to alarm.	1620/06
57	24-PDAH-266	SCRUBBER MIST ELIMINATOR DELTA P	2 in wc																																	X		1651/06
58	24-XA-288	ID FAN MALFUNCTION 2ND STAGE	MALF	X	X																														X		Start I-lock for 2nd stage motor. Alarm not shown on P&ID.	1263/11
59	24-PDAH-291	DEMISTER CANDLES DELTA P	15 in wc																																	X		0650/04
60	24-PDAHH-291	DEMISTER CANDLES DELTA P	20 in wc		X																																	0650/12
61	24-LSHH-292	DEMISTER ACID WASH LEVEL	60 in wc																																		3 sec delay. "PAS Normal" input.	0620/02
62	24-LAH-293	DEMISTER SUMP	12 in wc																																	X		0650/02
63	24-LAHH-293	DEMISTER SUMP	14 in wc																																			0650/10
64	24-LAL-293	DEMISTER SUMP	4 in wc																																	X		0650/00
65	24-LSLL-294	DEMISTER SUMP LEVEL SWITCH	2.5 in wc																						X												3 sec delay. Active when MPF demister aligned to	0620/00
66	24-XAH-306	ID FAN VIBRATION SECOND STAGE	0.4 in/sec																																	X		1251/10
67	24-XSHH-306	ID FAN VIBRATION SECOND STAGE	0.5 in/sec		X																														X		Setpoint needs to be verified. In code as 24-XSH-306.	1220/06
68	24-TSH-307	ID FAN WINDING TEMP. SECOND STAGE	340°F		X																														X		Alarm on HI temp for any of 24-TSH-307A-F.	1220/00
69	24-PDAH-315	VENTURI BRINE FILTER	10 psid																																	X		1850/14
70	24-TAH-446	ID FAN BEARING TEMP FIRST STAGE	160°F																																	X	Alarm on either 24-TIT-446A or 446B high.	1251/04
71	24-TSHH-446	ID FAN BEARING TEMP FIRST STAGE	180°F		X																																1 sec delay. In code as TSH-446A/B.	1221/10
72	24-TAH-447	ID FAN BEARING TEMP. SECOND STAGE	160°F																																	X	Alarm on either 24-TIT-447A or 447B high.	1251/12
73	24-TSHH-447	ID FAN BEARING TEMP. SECOND STAGE	180°F		X																																3 sec delay. In code as TSH-447A/B.	1221/12
74	24-PDSH-462	ID FAN LUBE OIL FILTER DELTA PRESS HI	15 psig																																		Local alarm only. Input to 24-XS-586, common trouble alarm.	NA
75	24-PDSH-466	ID FAN LUBE OIL FILTER DELTA PRESS HI	15 psig																																		Local alarm only. Input to 24-XS-586, common trouble alarm.	NA

TOCDF METAL PARTS FURNACE (MPF) POLLUTION ABATEMENT SYSTEM (PAS)

TOCDF MPF PAS

ALARM AND INTERLOCK MATRIX

P&IDs: TE-1-D-528, TE-6-D-504, -505, -527, EG-6-D-501, -511
PLC: ICS-CONR-113; INTERLOCK: I-8

TOCDF MPF PAS

ITM	TAG NUMBER	DESCRIPTION	SETPOINT	B8:010/ 17	16	15	14	13	12	11	10	07	06	05	04	03	02	01	00	B8:011/ 17	16	15	14	13	12	11	10	07	06	05	04	03	02	01	00		REMARKS	ALARM BIT B001:XX/XX
		F00 - SPARE																																				
		F01 - SPARE																																				
		F02 - S/D COOLING CONVEYOR																																				
		F03 - S/D UNLOAD CONVEYOR																																				
		F04 - STOP ZONE 1 TIMER																																				
		F05 - STOP ZONE 2 TIMER																																				
		F06 - STOP ZONE 3 TIMER																																				
		F07 - S/D DISCHARGE AIRLOCK CONVEYOR																																				
		F10 - S/D ZONE 3 CONVEYOR																																				
		F11 - S/D ZONE 2 CONVEYOR																																				
		F12 - S/D ZONE 1 CONVEYOR																																				
		F13 - S/D CHARGE AIRLOCK CONVEYOR																																				
		F14 - S/D COMBUSTION AIR BLOWER																																				
		F15 - S/D RESPECTIVE MPF AFTERBURNER																																				
		F16 - S/D RESPECTIVE MPF BURNER																																				
		F17 - STOP FEED																																				
		MALFUNCTION																																				
																																				P17 - SPARE		
																																			P16 - SPARE		
																																			P15 - SPARE		
																																			P14 - SPARE		
																																			P13 - SPARE		
																																			P12 - SHUTDOWN DEMISTER WTR RETURN PUMP		
																																			P11 - SWITCHOVER BRINE PUMP TO BACK-UP (NOTE 1)		
																																			P10 - SWITCHOVER CLEAN LIQ PUMP TO BACK-UP (NOTE 1)		
																																			P07 - SPARE		
																																			P06 - SHUTDOWN BRINE PUMPS		
																																			P05 - SHUTDOWN CLEAN LIQUOR PUMPS		
																																			P04 - SHUTDOWN ID FAN (BOTH STAGES)		
																																			P03 - OPEN BLEED AIR VALVE		
																																			P02 - SHUTDOWN LUBE OIL PUMPS		
																																			P01 - SHUTDOWN ID FAN 1ST STAGE		
																																			P00 - SHUTDOWN ID FAN 2ND STAGE		
																																			PREALARM		
76	24-TSH-482	ID FAN LUBE OIL SUPPLY TEMP HIGH	125°F																																	Local alarm only. Input to 24-XS-586, common trouble alarm.	NA
77	24-IAH-500	ID FAN OVER CURRENT SECOND STAGE	33 amp		X																														X	45 sec delay on fan startup.	1250/02
78	24-IAL-500	ID FAN MOTOR SECOND STAGE	10 amp																													X				5 sec delay on fan startup. Even though deathwish bit to open the bleed air line is set, the valve is interlocked from opening during waste feed.	1250/10
79	24-TAH-509	QUENCH TO VENTURI	200°F																																X		1450/10
80	24-TAHH-509	QUENCH TO VENTURI	225°F		X																															24-TSHH-223 redundancy (see FAWB Note B-7). Open 24-TV-223, emergency quench spray.	1420/04
81	24-TAHHH-509	QUENCH TO VENTURI	250°F		X	X	X																													24-TSHHH-510 redundancy (see FAWB Note B-7). Open 24-TV-223, emergency quench spray.	1420/06
82	24-TSHHH-510	QUENCH TO VENTURI	250°F		X	X	X																													"PAS Normal" input.	1420/10
83	24-LSLL-513	SCRUBBER CHIMNEY TRAY LVL SWITCH	3.5 in wc		X																								X							3 sec delay. Requires 24-LAL-243 and 24-LSLL-513 for shutdown.	1620/12
84	24-PDAH-582	CLEAN LIQUOR FILTER DELTA P	10 psid																																X		1650/02
85	24-XS-586	ID FAN LUBE OIL TROUBLE	MALF	X																															X		1222/02
86	24-FSL-666	MINIMUM FLOW FOR PURGE	1500 scfm																																X	3 sec delay.	1620/16
87	24-FSLL-667	EXHAUST GAS LO-LO FLOW	900 scfm		X	X	X																													BMS 3-P running interlock.	1620/14
88	24-AAH-669	EXHAUST GAS CO	100 ppm		X																															RCRA AWFCO. 1 hr rolling avg (see NOTE 2), corrected to 7% O2, dry volume. Shown on P&ID as 24-ASH-669.	1250/14
89	24-ASH-669	EXHAUST GAS CO	100 ppm		X																															3 sec delay.	1220/02
90	24-XS-669	EXHAUST GAS CO MALF	MALF	X																																RCRA AWFCO on malfuntion alarm only if 14-AIT-384 is also in malfunction or is in "calibrate" mode. Alarm active only when combined fuel flow to primary and secondary > 100 scfm.	1220/04 1205/10
91	24-AAH-670	EXHAUST GAS O2	15%		X																															RCRA AWFCO. Shown on P&ID as 24-ASH-670.	1220/10
92	24-AAL-670	EXHAUST GAS O2	3%		X																															RCRA AWFCO.	1222/04
93	24-XA-670	EXHAUST GAS O2 MALF	MALF	X	X																															RCRA AWFCO on malfuntion alarm only if 14-AIT-082 is also in malfunction or is in "calibrate" mode.	1220/12 1205/06
94	24-LSLL-671	ID FAN LUBE OIL RESERVOIR	13.2 gal																																	Hardwired shutdown of lube oil pumps.	1221/00
95	24-PSLL-672	ID FAN LUBE OIL SUPPLY	15 psig																													X				10 sec delay after pump startup.	1220/16
96	24-FSL-673	ID FAN LUBE OIL SUPPLY LOW FLOW	0.15 gpm																																	3 sec delay. Hardwired switchover to back-up lube-oil pump.	1221/02

TOCDF METAL PARTS FURNACE (MPF) POLLUTION ABATEMENT SYSTEM (PAS)

TOCDF MPF PAS

ALARM AND INTERLOCK MATRIX

P&IDs: TE-1-D-528, TE-6-D-504, -505, -527, EG-6-D-501, -511
PLC: ICS-CONR-113; INTERLOCK: I-8

TOCDF MPF PAS

F00 - SPARE
F01 - SPARE
F02 - S/D COOLING CONVEYOR
F03 - S/D UNLOAD CONVEYOR
F04 - STOP ZONE 1 TIMER
F05 - STOP ZONE 2 TIMER
F06 - STOP ZONE 3 TIMER
F07 - S/D DISCHARGE AIRLOCK CONVEYOR
F10 - S/D ZONE 3 CONVEYOR
F11 - S/D ZONE 2 CONVEYOR
F12 - S/D ZONE 1 CONVEYOR
F13 - S/D CHARGE AIRLOCK CONVEYOR
F14 - S/D COMBUSTION AIR BLOWER
F15 - S/D RESPECTIVE MPF AFTERBURNER
F16 - S/D RESPECTIVE MPF BURNER
F17 - STOP FEED
MALFUNCTION

P17 - SPARE
P16 - SPARE
P15 - SPARE
P14 - SPARE
P13 - SPARE
P12 - SHUTDOWN DEMISTER WTR RETURN PUMP
P11 - SWITCHOVER BRINE PUMP TO BACK-UP (NOTE 1)
P10 - SWITCHOVER CLEAN LIQ PUMP TO BACK-UP (NOTE 1)
P07 - SPARE
P06 - SHUTDOWN BRINE PUMPS
P05 - SHUTDOWN CLEAN LIQUOR PUMPS
P04 - SHUTDOWN ID FAN (BOTH STAGES)
P03 - OPEN BLEED AIR VALVE
P02 - SHUTDOWN LUBE OIL PUMPS
P01 - SHUTDOWN ID FAN 1ST STAGE
P00 - SHUTDOWN ID FAN 2ND STAGE
PREALARM

ITM	TAG NUMBER	DESCRIPTION	SETPOINT	B8:010/ 17	16	15	14	13	12	11	10	07	06	05	04	03	02	01	00	B8:011/ 17	16	15	14	13	12	11	10	07	06	05	04	03	02	01	00	PREALARM	REMARKS	ALARM BIT B001:XX/XX
97	24-FSLL-673	ID FAN FIRST STAGE LUBE OIL	0.10 gpm		X																													X			3 sec delay.	1221/04
98	24-FSL-674	ID FAN SECOND STAGE LUBE OIL	0.15 gpm																																		Local alarm only. Hardwired switchover to back-up lube-oil pump.	NA
99	24-FSLL-674	ID FAN SECOND STAGE LUBE OIL	0.10 gpm		X																														X		3 sec delay.	1221/06
100	24-LSL-688	ID FAN LUBE OIL RESERVOIR	18 gal																																		Local alarm only. Input to 24-XS-586, common trouble alarm.	NA
101	24-ZS-751B	BLEED AIR VALVE NOT CLOSED	NOT CLOSED																																	X		0605/01
102	24-FISL-760	DEMISTER WATER RETURN PUMP SEAL W	0.15 gpm																						X													0620/12
103	24-TSHH-789	ID FAN LO. SUPPLY HI-HI TEMP	130°F																																		1 sec delay. I-8 interlock shown on P&ID.	1221/14
104	24-PSL-790	ID FAN LUBE OIL DISCHARGE	25 psig																																		Local alarm only. Hardwired switchover to back-up lube-oil pump.	NA
105	24-XA-910	PAS-PUMP-134 RECVD WTR FEED PMP	MALF	X																																	Switchover to backup pump on malf. alarm when PAS-PUMP-134 is selected as primary.	4060/11
106	24-PSLL-913	RECVD WTR FEED PUMP DISCH PRESS	70 psig																																		3 sec delay. Hardwired S/D of PAS-PUMP-134/135.	4020/00
107	24-XA-915	PAS-PUMP-135 RECVD WTR FEED PMP	MALF	X																																	Switchover to backup pump on malf. alarm when PAS-PUMP-135 is selected as primary.	4061/11
108	24-PSL-919	RECVD WTR FEED PUMP DISCH PRESS	85 psig																																		3 sec delay. Switchover to backup pump.	4020/02
109	24-LAH-920	RECOVERED WATER TANK LEVEL HIGH	11'0"																																	X	Stop transfer of treated sewage effluent at > 10'5".	4050/00
110	24-LAL-920	RECOVERED WATER TANK LEVEL LOW	3'0"																																	X	Start tranfer of treated sewage effluent at < 5'5".	4050/02
111	24-LSHH-921	RECVD WATER TANK LEVEL HIGH HIGH	13'6"																																		3 sec delay. SP per TE-6-D-510. Hardwired S/D of PAS-PUMP-110 and treated sewage effluent pump.	4020/04
112	24-LSLL-922	RECVD WATER TANK LEVEL LOW LOW	1'4"																																		3 sec delay. SP per TE-6-D-510. S/D PAS-PUMP-134/135.	4020/06
113	24-XA-949	EMERGENCY BLOWER INLET DAMPER	MALF	X	X																																	0861/11
114	24-XA-950	EMERGENCY BLOWER OUTLET DAMPER	MALF	X	X																																	0862/11
115	24-PSH-953	ID FAN NEGATIVE PRESSURE	-13 in wc																																		Switchover for emergency blower (i.e. opens 24-XV-949 & -950).	1220/14
116	24-XSH-963	EMERG. BLOWER VIBRATION	0.5 in/sec																																	X		0820/00
117	24-TSH-971	ID FAN WINDING TEMP. FIRST STAGE	340°F		X																													X			Alarm on HI temp for any of 24-TSH-971A-F.	1221/16
118	24-IAH-972	ID FAN OVER CURRENT FIRST STAGE	33 amp		X																													X			45 sec delay on fan startup.	1250/04
119	24-IAL-972	ID FAN MOTOR FIRST STAGE	10 amp																													X					5 sec delay on fan startup. Even though deathwish bit to open the bleed air line is set, the valve is interlocked from opening during waste feed.	1250/12
120	24-XAH-973	ID FAN VIBRATION 1ST STAGE	0.4 in/sec																																	X		1251/02

TOCDF METAL PARTS FURNACE (MPF) POLLUTION ABATEMENT SYSTEM (PAS)

TOCDF MPF PAS

ALARM AND INTERLOCK MATRIX

P&IDs: TE-1-D-528, TE-6-D-504, -505, -527, EG-6-D-501, -511
PLC: ICS-CONR-113; INTERLOCK: I-8

TOCDF MPF PAS

B8:010/ (bits 17 to 00):
F00 - SPARE
F01 - SPARE
F02 - S/D COOLING CONVEYOR
F03 - S/D UNLOAD CONVEYOR
F04 - STOP ZONE 1 TIMER
F05 - STOP ZONE 2 TIMER
F06 - STOP ZONE 3 TIMER
F07 - S/D DISCHARGE AIRLOCK CONVEYOR
F10 - S/D ZONE 3 CONVEYOR
F11 - S/D ZONE 2 CONVEYOR
F12 - S/D ZONE 1 CONVEYOR
F13 - S/D CHARGE AIRLOCK CONVEYOR
F14 - S/D COMBUSTION AIR BLOWER
F15 - S/D RESPECTIVE MPF AFTERBURNER
F16 - S/D RESPECTIVE MPF BURNER
F17 - STOP FEED
MALFUNCTION

B8:011/ (bits 17 to 00):
P17 - SPARE
P16 - SPARE
P15 - SPARE
P14 - SPARE
P13 - SPARE
P12 - SHUTDOWN DEMISTER WTR RETURN PUMP
P11 - SWITCHOVER BRINE PUMP TO BACK-UP (NOTE 1)
P10 - SWITCHOVER CLEAN LIQ PUMP TO BACK-UP (NOTE 1)
P07 - SPARE
P06 - SHUTDOWN BRINE PUMPS
P05 - SHUTDOWN CLEAN LIQUOR PUMPS
P04 - SHUTDOWN ID FAN (BOTH STAGES)
P03 - OPEN BLEED AIR VALVE
P02 - SHUTDOWN LUBE OIL PUMPS
P01 - SHUTDOWN ID FAN 1ST STAGE
P00 - SHUTDOWN ID FAN 2ND STAGE
PREALARM

ITM	TAG NUMBER	DESCRIPTION	SETPOINT	PREALARM	B8:010/ 17	B8:010/ 16	B8:010/ 15	B8:010/ 14	B8:010/ 13	B8:010/ 12	B8:010/ 11	B8:010/ 10	B8:010/ 07	B8:010/ 06	B8:010/ 05	B8:010/ 04	B8:010/ 03	B8:010/ 02	B8:010/ 01	B8:010/ 00	B8:011/ 17	B8:011/ 16	B8:011/ 15	B8:011/ 14	B8:011/ 13	B8:011/ 12	B8:011/ 11	B8:011/ 10	B8:011/ 07	B8:011/ 06	B8:011/ 05	B8:011/ 04	B8:011/ 03	B8:011/ 02	B8:011/ 01	B8:011/ 00	REMARKS	ALARM BIT B001:XX/XX
121	24-XSHH-973	ID FAN VIBRATION 1ST STAGE	0.5 in/sec		X																														X			Verify setpoint. In code as XSH not XSHH.	1222/00
122	24-XA-975	ID FAN MALFUNCTION 1ST STAGE	MALF	X	X																														X			Start I-lock for 1st stage motor. Alarm not shown on P&ID.	1261/11
123	24-TAH-9102	ID FAN OUTLET TEMP.	260°F																																		X		1250/16
124	24-TAHH-9102	ID FAN OUTLET TEMP.	280°F																																		X		1251/00
125	ACAMS PAS-701	ACAM COMMON STACK	0.2 ASC		X																																	RCRA AWFCO. Stop feed for DFS, LICs, and MPF. DICO from ICS-CONR-112. See NOTE 4.	B4:31/00
126	ACAMS PAS-701	ACAM COMMON STACK	MALF	X	X																																	RCRA AWFCO. Stop feed for DFS, LICs, and MPF. DICO from ICS-CONR-112.	B4:31/00
127	ACAMS PAS-701	ACAM COMMON STACK	OFFLINE		X																																	RCRA AWFCO. Stop feed for DFS, LICs, and MPF. DICO from ICS-CONR-112.	B4:31/00
128	ACAMS PAS-701	ACAM COMMON STACK	NOT STAGGERED		X																																	RCRA AWFCO. Stop feed for DFS, LICs, and MPF. DICO from ICS-CONR-112.	B4:31/00
129	ACAMS PAS-703	ACAM MPF PAS	MALF	X	X																																	RCRA AWFCO.	4620/06
130	ACAMS PAS-703	ACAM MPF PAS	OFFLINE		X																																	RCRA AWFCO.	4620/06
131	ACAMS PAS-703	ACAM MPF PAS	0.2 ASC		X																																	RCRA AWFCO. See NOTE 4.	4620/06
132		BOTH ID FANS AND EMERG. ID FAN	NOT RUNNING		X			X																															I:210/03 I:210/05 I:212/13
133		BRINE pH LOOPS A & B IN CALIBRATE	IN CALIBRATE		X																																	See FAWB Note B-16.	1864/13 1865/13
134		BRA TANKS LVL HI HI / UNAVAILABLE	DICO		X																																	RCRA AWFCO. See BRA FAWB for tag #s and setpoints. DICO from ICS-CONR-108.	B4:23/02
135		MPF PAS NORMAL	NOT NORMAL																																				2005/11

NOTE 1: P10 and P11 responses are not part of the deathwish relay. They are included as column headings for presentation clarity.
NOTE 2: One hour rolling average is composed of the 60 most recent one-minute averages. Each one-minute average is composed of the 4 most recent instantaneous CO readings at 15-sec intervals.
NOTE 3: 24-LSHH-244 also closes 24-XV-226 and inhibits timer activation. When controllers are in AUTO, 24-LSHH-244: 1) closes 24-LV-243, 2) closes 24-LV-245, 3) closes 24-AV-247, 4) closes 24-AV-224.
NOTE 4: Alarm settings are 0.2 times the allowable stack concentration (ASC) for each chemical agent. The setpoints are (mg/m3): GB=0.00006, H/HD/HT=0.006 and VX=0.00006.

UMCDF DEACTIVATION FURNACE SYSTEM (DFS) POLLUTION ABATEMENT SYSTEM (PAS) AND PAS FILTER SYSTEM (PFS)

UMCDF DFS PAS/PFS

ALARM AND INTERLOCK MATRIX

UMCDF DFS PAS/PFS

P&IDs: UM-6-D-506,-507, -508, -509, -523, -524,-527, -530, and -531, UM-6-H-504
PLC: ICS-CONR-112; INTERLOCK: I-10

F00 - SPARE
F01 - CLOSE ISOLATION VALVES
F02 - SHUTDOWN KILN LUBE OIL
F03 - SHUTDOWN HEATED DISCHARGE CONVEYOR
F04 - SHUTDOWN HEATED DISCHARGE CONVEYOR HEATERS
F05 - SHUTDOWN KILN DRIVE
F06 - OSCILLATE KILN DRIVE
F07 - SHUTDOWN AFTERBURNER COMBUSTION AIR BLOWER
F10 - SHUTDOWN AFTERBURNER #2
F11 - SHUTDOWN AFTERBURNER #1
F12 - SHUTDOWN KILN COMBUSTION AIR BLOWER
F13 - SHUTDOWN KILN BURNER
F14 - CLOSE KILN SHROUD DAMPERS
F15 - OPEN KILN SHROUD DAMPERS
F16 - SPARE
F17 - STOP FEED
MALFUNCTION

P17 - S/D PFS-COOL-115A FAN B (NOTE 1)
P16 - S/D PFS-COOL-115A FAN A (NOTE 1)
P15 - SD PFS-COOL-115B FAN B (NOTE 1)
P14 - S/D PFS-COOL-115B FAN A (NOTE 1)
P13 - S/D MIST ELIM WATER RETURN PUMP
P12 - SWITCHOVER BRINE PUMP TO BACKUP (NOTE 1)
P11 - SWITCHOVER CL LIQ PUMP TO BACKUP (NOTE 1)
P10 - BYPASS CARBON FILTER (NOTE 1)
P07 - S/D BRINE PUMPS
P06 - S/D CLEAN LIQUOR PUMPS
P05 - S/D PFS-COOL-115C FAN B (NOTE 1)
P04 - S/D PFS-COOL-115C FAN A (NOTE 1)
P03 - S/D PFS-COOL-115D FAN B (NOTE 1)
P02 - S/D PFS-COOL-115D FAN A (NOTE 1)
P01 - S/D IST STAGE ID FAN
P00 - S/D 2ND STAGE ID FAN
PREALARM

ITEM NUM	TAG NUMBER	DESCRIPTION	SET POINT	B8:010/ 17	16	15	14	13	12	11	10	07	06	05	04	03	02	01	00	B8:011/ 17	16	15	14	13	12	11	10	07	06	05	04	03	02	01	00		REMARKS	ALARM BIT B001:XX/XX	MASK WORD B8:XX	
1	24 TSHH 001	QUENCH TOWER-103 OVERHEAD	225 F	X																																	RCRA AWFCO DFS 25. Open emergency quench spray (see FAWB Note B-7). Ref: UMAP815DFS & UMSF981DFS.	1420/00	112	
2	24 FAL 002	BRINE TO QUENCH TWR	200 gpm	X																																	5 sec delay.	1450/00	114	
3	24 PDAH 003	SCRUBBER MIST ELIMINATOR	2 in wc																																	X		1651/06	NA	
4	24 FAL 006	VENTURI BRINE FEED	310 gpm																																	X	5 sec delay. Prealarm added per UMAP815DFS. SP per RFI C-ANCDF-003R1.	**1850/02**	NA	CH 2
5	24 FALL 006	VENTURI BRINE FEED	300 gpm	X																																	RCRA AWFCO DFS 26 **and MACT AWFCO DFS(M)-30.** Ref: UMAP815DFS & RFI C-ANCDF-003R1.	**1851/16**	180	CH 2
6	24 FALL 006A	VENTURI BRINE FEED	**300 gpm**	X																																	MACT AWFCO DFS(M)-**31**. ROHA. Ref. UMSF981DFS.	**0022/14**	**180**	CH 2
7	24 AAH 007	QUENCH BRINE pH	9.5 pH																																	X		1850/12	NA	
8	24 AAL 007	QUENCH BRINE pH	7.5 pH																																	X		1851/06	NA	
9	**24 AIT 007A/B**	**BOTH IN MAINTENANCE**	**MAINT**	**X**																																		**1870/13 1871/13**	**154**	CH 2
10	24 AALL 007	QUENCH BRINE pH	**5.0 pH**	X																																	Alarm is at TOCDF and is in Jan 2000 ANCDF code, but is not shown on UM-6-D-506.	1850/10	212	CH 2
11	24 AALL 007A	QUENCH BRINE pH	**5.5 pH**	X																																	MACT AWFCO DFS(M)-**19**. ROHA. Ref. UMSF981DFS. Alarm active only when 24-AE-007A is online. See FAWB Note B-16.	**0023/04**	**212**	CH 2
12	24 AALL 007B	QUENCH BRINE pH	**5.5 pH**	X																																	MACT AWFCO DFS(M)-**19**. ROHA. Ref. UMSF981DFS. Alarm active only when 24-AE-007B is online. See FAWB Note B-16.	**0023/04**	**212**	CH 2
13	24 PDAH 007	QUENCH BRINE FILTER PRESS	10.0 psid																																	X		1850/14	NA	
14	24 PDAH 008	VENTURI SCRUBBER DELTA P	SP+10 in wc																																	X	SP=setpoint entered in controller by operator	1850/06	NA	
15	24 PDAL 008	VENTURI SCRUBBER DELTA P	25 in wc																																	X		1850/04	NA	
16	24 PDALL 008	VENTURI SCRUBBER DELTA P	20 in wc	X																																	RCRA AWFCO DFS 15 **and MACT AWFCO DFS(M)-20**. Ref: UMAP815DFS.	1851/00	116	CH 2
17	24 PDALL 008A	VENTURI SCRUBBER DELTA P	**20 in wc**	X																																	MACT AWFCO DFS(M)-**21**. ROHA. Ref. UMSF981DFS.	**0022/12**	116	CH 2
18	24 LAH 009	DFS QUENCH TOWER	**4.0 in**																																	X	10 sec delay.	1450/04	NA	CH 2

UMCDF DEACTIVATION FURNACE SYSTEM (DFS) POLLUTION ABATEMENT SYSTEM (PAS) AND PAS FILTER SYSTEM (PFS)

UMCDF DFS PAS/PFS

ALARM AND INTERLOCK MATRIX

UMCDF DFS PAS/PFS

P&IDs: UM-6-D-506,-507, -508, -509, -523, -524,-527, -530, and -531, UM-6-H-504
PLC: ICS-CONR-112; INTERLOCK: I-10

B8:010/

17	F00 - SPARE
16	F01 - CLOSE ISOLATION VALVES
15	F02 - SHUTDOWN KILN LUBE OIL
14	F03 - SHUTDOWN HEATED DISCHARGE CONVEYOR
13	F04 - SHUTDOWN HEATED DISCHARGE CONVEYOR HEATERS
12	F05 - SHUTDOWN KILN DRIVE
11	F06 - OSCILLATE KILN DRIVE
10	F07 - SHUTDOWN AFTERBURNER COMBUSTION AIR BLOWER
07	F10 - SHUTDOWN AFTERBURNER #2
06	F11 - SHUTDOWN AFTERBURNER #1
05	F12 - SHUTDOWN KILN COMBUSTION AIR BLOWER
04	F13 - SHUTDOWN KILN BURNER
03	F14 - CLOSE KILN SHROUD DAMPERS
02	F15 - OPEN KILN SHROUD DAMPERS
01	F16 - SPARE
00	F17 - STOP FEED

B8:011/

17	P17 - S/D PFS-COOL-115A FAN B (NOTE 1)
16	P16 - S/D PFS-COOL-115A FAN A (NOTE 1)
15	P15 - SD PFS-COOL-115B FAN B (NOTE 1)
14	P14 - S/D PFS-COOL-115B FAN A (NOTE 1)
13	P13 - S/D MIST ELIM WATER RETURN PUMP
12	P12 - SWITCHOVER BRINE PUMP TO BACKUP (NOTE 1)
11	P11 - SWITCHOVER CL LIQ PUMP TO BACKUP (NOTE 1)
10	P10 - BYPASS CARBON FILTER (NOTE 1)
07	P07 - S/D BRINE PUMPS
06	P06 - S/D CLEAN LIQUOR PUMPS
05	P05 - S/D PFS-COOL-115C FAN B (NOTE 1)
04	P04 - S/D PFS-COOL-115C FAN A (NOTE 1)
03	P03 - S/D PFS-COOL-115D FAN B (NOTE 1)
02	P02 - S/D PFS-COOL-115D FAN A (NOTE 1)
01	P01 - S/D IST STAGE ID FAN
00	P00 - S/D 2ND STAGE ID FAN

0	MALFUNCTION
0	PREALARM

ITEM NUM	TAG NUMBER	DESCRIPTION	SET POINT	B8:010/ 17	16	15	14	13	12	11	10	07	06	05	04	03	02	01	00	B8:011/ 17	16	15	14	13	12	11	10	07	06	05	04	03	02	01	00	0	REMARKS	ALARM BIT B001:XX/XX	MASK WORD B8:XX	
19	24 LAHH 009	DFS QUENCH TOWER	8.0 in		X			X	X	X	X	X	X		X	X																					SP from P&ID. Shuts off brine spray to quench tower and PRW makeup to quench brine. Input to PAS NORMAL relay.	1450/02	118	
20	24 LAH 010	SCRUBBER BOTTOM SUMP	**39 in**																																	X	Prealarm per ANCDF Oct 2000 PAS/PFS mtg.	1650/16	122	CH 2
21	24 LAL 010	SCRUBBER BOTTOM SUMP	**15 in**																																	X	Prealarm per ANCDF Oct 2000 PAS/PFS mtg.	1650/14	**NA**	CH 2
22	24 LSHH 010	SCRUBBER BOTTOM SUMP	**45 in**		X																																RCRA AWFCO DFS-32. Ref: UMAP815DFS. Open 24-DV-33 (Deenergize 24-LY-33). **Note: 24" tangent to lower gage tap removed.**	1621/02	**122 256**	CH 2
23	24 LSLL 010	SCRUBBER BOTTOM SUMP	**9 in**		X																																RCRA AWFCO DFS 33. Measured from bottom tangent. Ref: UMAP815DFS. Close 24-DV-33 (24-LY-33 energized and drive 24-DY-33 to close). **Note: 24" tangent to lower gage tap removed.**	1621/04	**120 256**	CH 2
24	24 PAL 011	QUENCH BRINE DISCHARGE	80 psig																						X												SP per DSIC. Switchover to secondary pump on low pressure alarm when primary is running.	1850/00	NA	
25	24 PALL 011	QUENCH BRINE DISCHARGE	40 psig		X																																24-PALL-011 not shown on UM-6-D-506.	1851/12	256	
26	24 XA 013	BRINE PUMP 106	MALF	X																					X												Switchover to secondary pump on malf. alarm when PAS-PUMP-106 is selected as primary.	1860/11	NA	
27	24 FISL 017	BRINE PUMP 106 SEAL WATER	0.15 gpm																																		5 sec delay. S/D PAS-PUMP-106 if selected as primary, which will cause 24-XA-013 to alarm. SP from instrument data sheet.	1820/00	NA	
28	24 XA 019	BRINE PUMP 107	MALF	X																					X												Switchover to secondary pump on malf. alarm when PAS-PUMP-107 is selected as primary.	1862/11	NA	
29	24 FISL 023	BRINE PUMP 107 SEAL WATER	0.15 gpm																																		5 sec delay. S/D PAS-PUMP-107 if selected as primary, which will cause 24-XA-019 to alarm. SP from instrument data sheet.	1820/02	NA	
30	24 LSLLL 024	SCRUBBER BOTTOM SUMP	**3 in**		X			X	X	X	X	X	X		X	X											X										3 sec delay. Input to PAS NORMAL relay (see FAWB Note B-19).	1620/00	120	CH 2
31	24 PDAH 025	SCRUBBER-102 PACKED BED D.P.	**3.0 in wc**																																	X		1651/10	NA	CH 2
32	24 PDAL 025A	SCRUBBER-102 PACKED BED D.P.	**0.5 in wc**																																	**X**	ROHA. **SP per ECP 2002-108; INFO FROM KOCH-GLITSCH.**	**1653/12**	**182**	CH 2
33	**24 PDALL 025A**	**SCRUBBER-102 PACKED BED D.P.**	**0.3 in wc**		**X**																																**MACT AWFCO DFS(M)-15. ROHA. SP per ECP 2002-108; INFO FROM KOCH-GLITSCH; PERMIT MOD REQ'D.**	**1653/14**	**182**	CH 2

UMCDF DEACTIVATION FURNACE SYSTEM (DFS) POLLUTION ABATEMENT SYSTEM (PAS) AND PAS FILTER SYSTEM (PFS)

UMCDF DFS PAS/PFS

ALARM AND INTERLOCK MATRIX

UMCDF DFS PAS/PFS

P&IDs: UM-6-D-506,-507, -508, -509, -523, -524,-527, -530, and -531, UM-6-H-504
PLC: ICS-CONR-112; INTERLOCK: I-10

B8:010/
- F00 - SPARE
- F01 - CLOSE ISOLATION VALVES
- F02 - SHUTDOWN KILN LUBE OIL
- F03 - SHUTDOWN HEATED DISCHARGE CONVEYOR
- F04 - SHUTDOWN HEATED DISCHARGE CONVEYOR HEATERS
- F05 - SHUTDOWN KILN DRIVE
- F06 - OSCILLATE KILN DRIVE
- F07 - SHUTDOWN AFTERBURNER COMBUSTION AIR BLOWER
- F10 - SHUTDOWN AFTERBURNER #2
- F11 - SHUTDOWN AFTERBURNER #1
- F12 - SHUTDOWN KILN COMBUSTION AIR BLOWER
- F13 - SHUTDOWN KILN BURNER
- F14 - CLOSE KILN SHROUD DAMPERS
- F15 - OPEN KILN SHROUD DAMPERS
- F16 - SPARE
- F17 - STOP FEED
- MALFUNCTION

B8:011/
- P17 - S/D PFS-COOL-115A FAN B (NOTE 1)
- P16 - S/D PFS-COOL-115A FAN A (NOTE 1)
- P15 - SD PFS-COOL-115B FAN B (NOTE 1)
- P14 - S/D PFS-COOL-115B FAN A (NOTE 1)
- P13 - S/D MIST ELIM WATER RETURN PUMP
- P12 - SWITCHOVER BRINE PUMP TO BACKUP (NOTE 1)
- P11 - SWITCHOVER CL LIQ PUMP TO BACKUP (NOTE 1)
- P10 - BYPASS CARBON FILTER (NOTE 1)
- P07 - S/D BRINE PUMPS
- P06 - S/D CLEAN LIQUOR PUMPS
- P05 - S/D PFS-COOL-115C FAN B (NOTE 1)
- P04 - S/D PFS-COOL-115C FAN A (NOTE 1)
- P03 - S/D PFS-COOL-115D FAN B (NOTE 1)
- P02 - S/D PFS-COOL-115D FAN A (NOTE 1)
- P01 - S/D IST STAGE ID FAN
- P00 - S/D 2ND STAGE ID FAN
- PREALARM

ITEM NUM	TAG NUMBER	DESCRIPTION	SET POINT	17	16	15	14	13	12	11	10	07	06	05	04	03	02	01	00	17	16	15	14	13	12	11	10	07	06	05	04	03	02	01	00	PREALARM	REMARKS	ALARM BIT B001:XX/XX	MASK WORD B8:XX	
34	24 FAL 030	SCRUBBER-102 CLEAN LIQ FLOW	**90% of SP**																																	X	45 sec delay after pump startup. 5 sec delay for alarm. Design flow is 2182 gpm.	1650/10	NA	CH 2
35	24 FALL 030	SCRUBBER-102 CLEAN LIQ FLOW	1527 gpm	X																																	RCRA AWFCO DFS-18 **and MACT AWFCO DFS(M)-25**. Ref: UMAP815DFS.	1650/06	182	CH 2
36	24 FALL 030A	SCRUBBER-102 CLEAN LIQ FLOW	**1527 gpm**	X																																	MACT AWFCO DFS(M)-**26**. ROHA. Ref. UMSF981DFS.	**0023/00**	**182**	CH 2
37	24 LAL 031	SCRUBBER-102 CLEAN LIQUOR SUMP	24 in																																	X	SP from P&ID (14 ft 0 in. minus 12 ft 0 in. offset). SP is 30 in. above bottom of chimney tray well point. Alarm response per Oct 2000 ANCDF PAS/PFS mtg.	1650/12	**NA**	CH 2
38	24 LSHHH 032	SCRUBBER 102 SUMP	**51 in**	X		X	X	X	X	X	X	X		X	X									X													3 sec delay. Input to PAS NORMAL relay (see FAWB Note B-19). See NOTE 3 for additional interlocks.	1620/02	122	CH 2
39	24 DAH 033	PUMP-106/107 BRINE DENSITY	**1.15 sg**																																	X	Setpoint from RFI S-ALL-0232 but will be revised based on UMSF981DFS.	1850/16	NA	CH 2
40	24 DAHH 033	PUMP-106/107 BRINE DENSITY	1.16 sg	X																																	RCRA AWFCO DFS 27 **and MACT AWFCO DFS(M)-32**. Ref: UMSF981DFS.	1851/02	184	CH 2
41	24 DAHH 033A	PUMP-106/107 BRINE DENSITY	**1.16 sg**	X																																	MACT AWFCO DFS(M)-**33**. Based on 12-hr rolling avg. Ref. UMSF981DFS.	**0023/02**	**184**	CH 2
42	24 AAH 034	CLEAN LIQUOR pH	9.5 pH																																	X	45 sec delay after pump startup.	1651/02	**NA**	CH 2
43	24 AAL 034	CLEAN LIQUOR pH	**7.7 pH**																																	X		1651/14	NA	CH 2
44	**24 AIT 034A/B**	**BOTH IN MAINTENANCE**	**MAINT**	**X**																																		**1672/13 1671/13**	**154**	CH 2
45	24 AALL 034	CLEAN LIQUOR pH	7.5 pH	X																																	RCRA AWFCO DFS-23 **and MACT AWFCO DFS(M)-27**. Ref: UMSF981DFS. See FAWB Note B-16.	1651/00	124	CH 2
46	24 AALL 034A	CLEAN LIQUOR pH	**7.5 pH**	X																																	MACT AWFCO DFS(M)-**28**. ROHA. Ref. UMSF981DFS. Alarm active only when 24-AE-034A is online. See FAWB Note B-16.	**0022/16**	**124**	CH 2
47	24 AALL 034B	CLEAN LIQUOR pH	**7.5 pH**	X																																	MACT AWFCO DFS(M)-**28**. ROHA. Ref. UMSF981DFS. Alarm active only when 24-AE-034B is online. See FAWB Note B-16.	**0022/16**	**124**	CH 2
48	24 DAH 035	CLEAN LIQUOR DENSITY	**1.03 sg**																																	X		1651/04	NA	CH 2
49	24 DAHH 035	CLEAN LIQUOR DENSITY	**1.04 sg**																																			1651/12	NA	CH 2

UMCDF DEACTIVATION FURNACE SYSTEM (DFS) POLLUTION ABATEMENT SYSTEM (PAS) AND PAS FILTER SYSTEM (PFS)

UMCDF DFS PAS/PFS

ALARM AND INTERLOCK MATRIX

UMCDF DFS PAS/PFS

P&IDs: UM-6-D-506,-507, -508, -509, -523, -524,-527, -530, and -531, UM-6-H-504
PLC: ICS-CONR-112; INTERLOCK: I-10

F00 - SPARE
F01 - CLOSE ISOLATION VALVES
F02 - SHUTDOWN KILN LUBE OIL
F03 - SHUTDOWN HEATED DISCHARGE CONVEYOR
F04 - SHUTDOWN HEATED DISCHARGE CONVEYOR HEATERS
F05 - SHUTDOWN KILN DRIVE
F06 - OSCILLATE KILN DRIVE
F07 - SHUTDOWN AFTERBURNER COMBUSTION AIR BLOWER
F10 - SHUTDOWN AFTERBURNER #2
F11 - SHUTDOWN AFTERBURNER #1
F12 - SHUTDOWN KILN COMBUSTION AIR BLOWER
F13 - SHUTDOWN KILN BURNER
F14 - CLOSE KILN SHROUD DAMPERS
F15 - OPEN KILN SHROUD DAMPERS
F16 - SPARE
F17 - STOP FEED
MALFUNCTION

P17 - S/D PFS-COOL-115A FAN B (NOTE 1)
P16 - S/D PFS-COOL-115A FAN A (NOTE 1)
P15 - SD PFS-COOL-115B FAN B (NOTE 1)
P14 - S/D PFS-COOL-115B FAN A (NOTE 1)
P13 - S/D MIST ELIM WATER RETURN PUMP
P12 - SWITCHOVER BRINE PUMP TO BACKUP (NOTE 1)
P11 - SWITCHOVER CL LIQ PUMP TO BACKUP (NOTE 1)
P10 - BYPASS CARBON FILTER (NOTE 1)
P07 - S/D BRINE PUMPS
P06 - S/D CLEAN LIQUOR PUMPS
P05 - S/D PFS-COOL-115C FAN B (NOTE 1)
P04 - S/D PFS-COOL-115C FAN A (NOTE 1)
P03 - S/D PFS-COOL-115D FAN B (NOTE 1)
P02 - S/D PFS-COOL-115D FAN A (NOTE 1)
P01 - S/D IST STAGE ID FAN
P00 - S/D 2ND STAGE ID FAN
PREALARM

ITEM NUM	TAG NUMBER	DESCRIPTION	SET POINT	B8:010/ 17	16	15	14	13	12	11	10	07	06	05	04	03	02	01	00	B8:011/ 17	16	15	14	13	12	11	10	07	06	05	04	03	02	01	00	PREALARM	REMARKS	ALARM BIT B001:XX/XX	MASK WORD B8:XX	
50	24 DAHH 035A	CLEAN LIQUOR DENSITY	**1.04 sg**		X																																MACT AWFCO DFS(M)-**23**. Based on 12-hr rolling avg. Ref. UMSF981DFS (listed in ECP as 24-DAHH-033). Alarm not yet shown on UM-6-D-506.	**1653/00**	**184**	CH 2
51	24 PDAH 051	QUENCH TOWER 103 BRINE FILTER	10.0 psid																																	X		1450/06	NA	
52	**24 PDAHH 053**	**MPF/DFS SPARE DEMISTER**	**20 in wc**		**X**																																**Alarm from CONR-113. Stop feed only if spare demister selected. RCRA AWFCO DFS-41 and MACT AWFCO DFS(M)-44.**	**B4:33/10**	**192**	CH 2
53	24 XA 064	1st & 2nd STAGE ID FAN	NOT RUNNING		X				X			X																										1261/13 1263/13	226	
54	24 XA 065	2nd STAGE ID FAN	MALF	X	X																															X	Start I-lock for 2nd stage motor.	1263/11	264	
55	24 XA 066	2nd STAGE ID FAN TROUBLE	Trouble		X																															X	Alarm response per RFI C-ANCDF-002. Trouble alarm initiated by ASD motor thermal overload which stops the motor.	**1222/02**	**264**	CH 2
56	24 SAH 066A	2nd STAGE ID FAN SPEED	1800 rpm		X																															X	SP per RFI S-ALL-232.	1253/02	**136**	CH 2
57	**24 XS 076**	**NOX EMISSION**	**MALF**	**X**																																		**1222/04**	**NA**	CH 2
58	24 TSH **077**	2ND STAGE ID FAN WINDING TEMP	**300°F**		X																																SP from vendor info. Alarm on high temp for any of 24-TSH-077A through F. Stop feed per UM-6-D-507 Note 17.	1220/00	**130**	CH 2
59	24 TSHH **077A/B**	2ND STAGE ID FAN WINDING TEMP	**312°F**																																	X	SP from vendor info. Alarm on high-high temp for any of 24-TSHH-077A **and B** thru F. UM-6-D-507 Note 19 specifies S/D 2nd stage, except when running in emergency mode.	1223/06	**128**	CH 2
60	24 XAH 080	2nd STAGE ID FAN VIBRATION	0.25 in/sec		X																																3 sec delay. See NOTE 5.	1252/02	**130**	CH 2
61	24 XSHH 080	2nd STAGE ID FAN VIBRATION	0.5 in/sec																																	X	3 sec delay. S/D 2nd stage, except when running in emergency mode. See NOTE 5.	1220/06	**128**	CH 2
62	24 FAH 191	PAS-SCRB-102 CAUSTIC ADDITION	**3.0 gpm**																																	X	SP per RFI S-ALL-232. Note: AN modified SP	1652/10	NA	CH 2
63	24 AAH 206A	DFS FLUE GAS STACK O2	12% O2																																	X	Corrected to dry basis. See NOTE 2.	**1254/02**	NA	CH 2
64	24 AAHH 206A	DFS FLUE GAS STACK O2	**14% O2**		X																																RCRA AWFCO DFS-29. Corrected to dry basis. See NOTE 2.	**1254/00**	**290**	CH 2
65	24 AAL 206A	DFS FLUE GAS STACK O2	6% O2																																	X	Corrected to dry basis. See NOTE 2.	**1254/04**	NA	CH 2
66	24 AALL 206A	DFS FLUE GAS STACK O2	5% O2		X																																RCRA AWFCO DFS-30 **and MACT AWFCO DFS(M)-35**. Corrected to dry basis. See NOTE 2.	**1254/06**	**290**	CH 2

UMCDF DEACTIVATION FURNACE SYSTEM (DFS) POLLUTION ABATEMENT SYSTEM (PAS) AND PAS FILTER SYSTEM (PFS)

UMCDF DFS PAS/PFS

ALARM AND INTERLOCK MATRIX

P&IDs: UM-6-D-506,-507, -508, -509, -523, -524,-527, -530, and -531, UM-6-H-504
PLC: ICS-CONR-112; INTERLOCK: I-10

UMCDF DFS PAS/PFS

B8:010/: F00 - SPARE; F01 - CLOSE ISOLATION VALVES; F02 - SHUTDOWN KILN LUBE OIL; F03 - SHUTDOWN HEATED DISCHARGE CONVEYOR; F04 - SHUTDOWN HEATED DISCHARGE CONVEYOR HEATERS; F05 - SHUTDOWN KILN DRIVE; F06 - OSCILLATE KILN DRIVE; F07 - SHUTDOWN AFTERBURNER COMBUSTION AIR BLOWER; F10 - SHUTDOWN AFTERBURNER #2; F11 - SHUTDOWN AFTERBURNER #1; F12 - SHUTDOWN KILN COMBUSTION AIR BLOWER; F13 - SHUTDOWN KILN BURNER; F14 - CLOSE KILN SHROUD DAMPERS; F15 - OPEN KILN SHROUD DAMPERS; F16 - SPARE; F17 - STOP FEED; MALFUNCTION

B8:011/: P17 - S/D PFS-COOL-115A FAN B (NOTE 1); P16 - S/D PFS-COOL-115A FAN A (NOTE 1); P15 - SD PFS-COOL-115B FAN B (NOTE 1); P14 - S/D PFS-COOL-115B FAN A (NOTE 1); P13 - S/D MIST ELIM WATER RETURN PUMP; P12 - SWITCHOVER BRINE PUMP TO BACKUP (NOTE 1); P11 - SWITCHOVER CL LIQ PUMP TO BACKUP (NOTE 1); P10 - BYPASS CARBON FILTER (NOTE 1); P07 - S/D BRINE PUMPS; P06 - S/D CLEAN LIQUOR PUMPS; P05 - S/D PFS-COOL-115C FAN B (NOTE 1); P04 - S/D PFS-COOL-115C FAN A (NOTE 1); P03 - S/D PFS-COOL-115D FAN B (NOTE 1); P02 - S/D PFS-COOL-115D FAN A (NOTE 1); P01 - S/D IST STAGE ID FAN; P00 - S/D 2ND STAGE ID FAN; PREALARM

ITEM NUM	TAG NUMBER	DESCRIPTION	SET POINT	B8:010/ 17	16	15	14	13	12	11	10	07	06	05	04	03	02	01	00	B8:011/ 17	16	15	14	13	12	11	10	07	06	05	04	03	02	01	00	REMARKS	ALARM BIT B001:XX/XX	MASK WORD B8:XX	
67	24 XS 206A	DFS FLUE GAS STACK O2	MALF	X	X																															Stop feed on malf. alarm only if 24-AIT-206B is also in malf. or in "calibrate" mode. See NOTE 2 **and Note 7**.	1224/00	290	CH 2
68	24 HS 206A/206B	BOTH DFS PAS O2 ANALYZERS IN CAL	In Calib		X																															**Stop feed with both analyzers in CALIBRATE; see note 7.**	1266/00	290	CH 2
69	24 AAH 206B	DFS FLUE GAS STACK O2	12% O2																																X	Corrected to dry basis. See NOTE 2.	1254/12	NA	CH 2
70	24 AAHH 206B	DFS FLUE GAS STACK O2	**14% O2**		X																															RCRA AWFCO DFS-29. Corrected to dry basis. See NOTE 2.	1254/10	290	CH 2
71	24 AAL 206B	DFS FLUE GAS STACK O2	6% O2																																X	Corrected to dry basis. See NOTE 2.	1254/14	NA	CH 2
72	24 AALL 206B	DFS FLUE GAS STACK O2	5% O2		X																															RCRA AWFCO DFS-30 **and MACT AWFCO DFS(M)-35**. Corrected to dry basis. See NOTE 2.	1254/16	290	CH 2
73	24 XS 206B	DFS FLUE GAS STACK O2	MALF	X	X																															Stop feed on malf. alarm only if 24-AIT-206A is also in malf. or in "calibrate" mode. See NOTE 2 **and Note 7**.	1224/02	290	CH 2
74	**24 ADH 206**	**DFS FLUE GAS O2 DIFFERENTIAL**	**+/- 1% O2**																																**X**	**Differential O2 alarm based on moisture-corrected value**	**TBD**	**TBD**	CH 2
75	**24 AAL 207AC**	**DFS STACK CO2 COMB. EFFICIENCY**	**99.90%**																																**X**	**Rockets only TSCA.**	**1256/02**	**NA**	CH 2
76	**24 AALL 207AC**	**DFS STACK CO2 COMB. EFFICIENCY**	**99.90%**		**X**																															**3 minute delay then stop feed. Rockets only TSCA.**	**1256/00**	**294**	CH 2
77	24 **MAH** 207A	DFS FLUE GAS STACK CO MOISTURE	**38 %**		X																															Switch racks on high **moisture volume**. If second unit also alarms on high **moisture**, stop feed. See NOTE 2.	**1224/10**	**294**	CH 2
78	24 XS 207A	DFS FLUE GAS STACK CO	MALF	X	X																															Stop feed on malf. alarm only if 24-AIT-207B is also in malf. or in "calibrate" mode. See NOTE 2 **and Note 7**.	**1224/04**	**292**	CH 2
79	24 HS 207A/207B	BOTH DFS PAS CO ANALYZERS IN CAL	In Calib		X																															**Stop feed with both analyzers in "CALIBRATE.' See NOTE 7.**	**1266/02**	**292**	CH 2
80	**24 AAL 207BC**	**DFS STACK CO2 COMB. EFFICIENCY**	**99.90%**																																**X**	**Rockets only TSCA.**	**1256/06**	**NA**	CH 2
81	**24 AALL 207BC**	**DFS STACK CO2 COMB. EFFICIENCY**	**99.90%**		**X**																															**3 minute delay then stop feed. Rockets only TSCA.**	**1256/04**	**294**	CH 2
82	24 **MAH** 207B	DFS FLUE GAS STACK CO MOISTURE	**38 %**	**X**	X																															Switch racks on high **moisture volume**. If second unit also alarms on high **moisture**, stop feed. See NOTE 2.	**1224/12**	**294**	CH 2

UMCDF DEACTIVATION FURNACE SYSTEM (DFS) POLLUTION ABATEMENT SYSTEM (PAS) AND PAS FILTER SYSTEM (PFS)

UMCDF DFS PAS/PFS

ALARM AND INTERLOCK MATRIX

UMCDF DFS PAS/PFS

P&IDs: UM-6-D-506,-507, -508, -509, -523, -524,-527, -530, and -531, UM-6-H-504
PLC: ICS-CONR-112; INTERLOCK: I-10

B8:010/

- F00 - SPARE
- F01 - CLOSE ISOLATION VALVES
- F02 - SHUTDOWN KILN LUBE OIL
- F03 - SHUTDOWN HEATED DISCHARGE CONVEYOR
- F04 - SHUTDOWN HEATED DISCHARGE CONVEYOR HEATERS
- F05 - SHUTDOWN KILN DRIVE
- F06 - OSCILLATE KILN DRIVE
- F07 - SHUTDOWN AFTERBURNER COMBUSTION AIR BLOWER
- F10 - SHUTDOWN AFTERBURNER #2
- F11 - SHUTDOWN AFTERBURNER #1
- F12 - SHUTDOWN KILN COMBUSTION AIR BLOWER
- F13 - SHUTDOWN KILN BURNER
- F14 - CLOSE KILN SHROUD DAMPERS
- F15 - OPEN KILN SHROUD DAMPERS
- F16 - SPARE
- F17 - STOP FEED
- MALFUNCTION

B8:011/

- P17 - S/D PFS-COOL-115A FAN B (NOTE 1)
- P16 - S/D PFS-COOL-115A FAN A (NOTE 1)
- P15 - SD PFS-COOL-115B FAN B (NOTE 1)
- P14 - S/D PFS-COOL-115B FAN A (NOTE 1)
- P13 - S/D MIST ELIM WATER RETURN PUMP
- P12 - SWITCHOVER BRINE PUMP TO BACKUP (NOTE 1)
- P11 - SWITCHOVER CL LIQ PUMP TO BACKUP (NOTE 1)
- P10 - BYPASS CARBON FILTER (NOTE 1)
- P07 - S/D BRINE PUMPS
- P06 - S/D CLEAN LIQUOR PUMPS
- P05 - S/D PFS-COOL-115C FAN B (NOTE 1)
- P04 - S/D PFS-COOL-115C FAN A (NOTE 1)
- P03 - S/D PFS-COOL-115D FAN B (NOTE 1)
- P02 - S/D PFS-COOL-115D FAN A (NOTE 1)
- P01 - S/D IST STAGE ID FAN
- P00 - S/D 2ND STAGE ID FAN
- PREALARM

ITEM NUM	TAG NUMBER	DESCRIPTION	SET POINT	17	16	15	14	13	12	11	10	07	06	05	04	03	02	01	00	17	16	15	14	13	12	11	10	07	06	05	04	03	02	01	00	PREALARM	REMARKS	ALARM BIT B001:XX/XX	MASK WORD B8:XX	
83	24 XS 207B	DFS FLUE GAS STACK CO	MALF	X	X																																Stop feed on malf. alarm only if 24-AIT-207A is also in malf. or in "calibrate" mode. See NOTE 2 **and Note 7**.	**1224/06**	**292**	CH 2
84	24 AAH 207C	DFS FLUE GAS STACK CO	90 ppm																																	X	ROHA. Corrected to 7% O2 dry basis. See NOTE 2.	**1255/12**	NA	CH 2
85	24 AAHH 207C	DFS FLUE GAS STACK CO	100 ppm		X																																RCRA AWFCO DFS-16 and MACT AWFCO DFS(M)-**22**. ROHA. Corrected to 7% O2 dry basis. See NOTE 2.	**1255/10**	**292**	CH 2
86	**24 ADH 207**	**DFS FLUE GAS STACK CO**	**12 ppm**																																	**X**	**Differential alarm for CO based on moisture-corrected value**	**1255/16**	**NA**	CH 2
87	24 TAH 274	CLEAN LIQUOR TO SCRUBBER	**135°F**																																	X	SP per RFI S-ALL-232.	1652/02	NA	CH 2
88	24 TAHH 274	CLEAN LIQUOR TO SCRUBBER	143°F		X																																SP & response per RFI S-ALL-232.	1652/00	**286**	CH 2
89	24 TAL 274	CLEAN LIQUOR TO SCRUBBER	100°F																																	X	SP per RFI S-ALL-232.	1652/04	NA	
90	24 PDAH 312	PAS MIST ELIM. DIFF P	15 in wc																																	X		0650/04	NA	
91	24 PDAHH 312	PAS MIST ELIM. DIFF P	20 in wc		X																																**RCRA AWFCO DFS-41 and MACT AWFCO DFS(M)-44. See note 2.**	0650/06	192	CH 2
92	24 LSHH 313	PAS MIST ELIM. SUMP	66 in																																		3 sec delay. SP from UM-6-D-508. Input to PAS NORMAL relay.	0620/02	NA	
93	24 LAH 314	PAS MIST ELIM. SUMP	**18 in**																																		SP from UM-6-D-508. Start PAS-PUMP-138 (see FAWB Note B-17).	0650/02	NA	CH 2
94	24 LAHH 314	PAS MIST ELIM. SUMP	**20 in**																																		SP from UM-6-D-508.	0650/10	NA	CH 2
95	24 LAL 314	PAS MIST ELIM. SUMP	10 in																																	X	SP from UM-6-D-508.	0650/00	NA	
96	24 LSLL 315	PAS MIST ELIM. SUMP	8 in																					X													3 sec delay. SP from UM-6-D-508. Alarm active when 24-HS-314 selected to DFS mist eliminator. Hardwired S/D of pump needs to be disabled when 24-HS-314 is aligned to the spare. (Note 24-HS-314 is not shown on P&ID).	0620/00	276	
97	24 XA 322	BRINE/CLEAN LIQ. DENSITY	MALF	X																																	Alarm for MALF signal from 24-XS-033 or 24-XS-035	**1652/12**	NA	CH 2
98	24 LSHH 347	PAS AREA SUMP PUMP-110	106 in																																		3 sec delay; DICO to ICS-CONR-111 to S/D feeding sump pumps. SP from instrument data sheet.	0620/04	NA	
99	24 FSL 373	QUENCH EMERGENCY WATER	10 gpm																																	**X**	3 sec delay. Active only when 24-TV-001 is open.	1420/02	NA	CH 2
100	24 TAH 374	QUENCH TOWER OVERHEAD	200°F																																	X	(see FAWB Note B-7)	1450/10	NA	
101	24 TSHHH 375	QUENCH TOWER OVERHEAD	250°F		X			X	X	X	X		X		X	X																					SP per ECP UMAC817ICS. Input to PAS NORMAL relay. See FAWB Note B-7.	1420/10	138	

UMCDF DEACTIVATION FURNACE SYSTEM (DFS) POLLUTION ABATEMENT SYSTEM (PAS) AND PAS FILTER SYSTEM (PFS)

UMCDF DFS PAS/PFS

ALARM AND INTERLOCK MATRIX

UMCDF DFS PAS/PFS

P&IDs: UM-6-D-506,-507, -508, -509, -523, -524,-527, -530, and -531, UM-6-H-504
PLC: ICS-CONR-112; INTERLOCK: I-10

F00 - SPARE
F01 - CLOSE ISOLATION VALVES
F02 - SHUTDOWN KILN LUBE OIL
F03 - SHUTDOWN HEATED DISCHARGE CONVEYOR
F04 - SHUTDOWN HEATED DISCHARGE CONVEYOR HEATERS
F05 - SHUTDOWN KILN DRIVE
F06 - OSCILLATE KILN DRIVE
F07 - SHUTDOWN AFTERBURNER COMBUSTION AIR BLOWER
F10 - SHUTDOWN AFTERBURNER #2
F11 - SHUTDOWN AFTERBURNER #1
F12 - SHUTDOWN KILN COMBUSTION AIR BLOWER
F13 - SHUTDOWN KILN BURNER
F14 - CLOSE KILN SHROUD DAMPERS
F15 - OPEN KILN SHROUD DAMPERS
F16 - SPARE
F17 - STOP FEED
MALFUNCTION

P17 - S/D PFS-COOL-115A FAN B (NOTE 1)
P16 - S/D PFS-COOL-115A FAN A (NOTE 1)
P15 - SD PFS-COOL-115B FAN B (NOTE 1)
P14 - S/D PFS-COOL-115B FAN A (NOTE 1)
P13 - S/D MIST ELIM WATER RETURN PUMP
P12 - SWITCHOVER BRINE PUMP TO BACKUP (NOTE 1)
P11 - SWITCHOVER CL LIQ PUMP TO BACKUP (NOTE 1)
P10 - BYPASS CARBON FILTER (NOTE 1)
P07 - S/D BRINE PUMPS
P06 - S/D CLEAN LIQUOR PUMPS
P05 - S/D PFS-COOL-115C FAN B (NOTE 1)
P04 - S/D PFS-COOL-115C FAN A (NOTE 1)
P03 - S/D PFS-COOL-115D FAN B (NOTE 1)
P02 - S/D PFS-COOL-115D FAN A (NOTE 1)
P01 - S/D IST STAGE ID FAN
P00 - S/D 2ND STAGE ID FAN
PREALARM

ITEM NUM	TAG NUMBER	DESCRIPTION	SET POINT	B8:010/ 17	16	15	14	13	12	11	10	07	06	05	04	03	02	01	00	B8:011/ 17	16	15	14	13	12	11	10	07	06	05	04	03	02	01	00		REMARKS	ALARM BIT B001:XX/XX	MASK WORD B8:XX	
102	24 FSL 376	SCRUBBER-102 PROCESS WTR	20 gpm																																	X	3 sec delay. Active only when 24-XV-026 is energized.	1620/10	NA	CH 2
103	24 LSLL 381	SCRUBBER 102 CLEAN LIQUOR SUMP	3 in	X																									X								**Time** delay. SP from UM-6-D-506 (14 ft 0 in. minus 12 ft 0 in. offset). SP is 9 in. above bottom of chimney tray well point. Alarm response per Oct 2000 ANCDF PAS/PFS mtg.	1620/12	140	CH 2
104	24 IAH 387	2nd STAGE ID FAN OVER CURRENT	**595 amp**																																	X	2-min delay on startup. **SP field change 07/22/02.**	1250/02	**NA**	CH 2
105	24 FSL 430	SCRB-102 MIN FLOW FOR PURGE	9000 scfm																																	X	Min flow for purge; 3 sec delay. SP from instrument data sheet.	1620/14	NA	
106	24 FSLL 430	SCRB-102 EXHAUST GAS	1000 scfm	X				X		X	X																										SP from instrument data sheet. BMS 3-P running interlock.	1620/16	148	
107	24 TSH 448A/B	1st STAGE ID FAN BEARING TEMP	160°F	X																																	3 sec delay. SP from vendor info. UM-6-D-507 Note 17 specifies stop feed.	1221/10	**168**	CH 2
108	24 TSHH 448A/B	1st STAGE ID FAN BEARING TEMP	200°F																															X			3 sec delay. SP from vendor info. UM-6-D-507 Note 19 specifies S/D 1st stage, except when running in emergency mode.	1223/10	**194**	CH 2
109	24 TSH 449A/B	2nd STAGE ID FAN BEARING TEMP	160°F	X																																	3 sec delay. SP from vendor info. UM-6-D-507 Note 17 specifies stop feed.	1221/12	**168**	CH 2
110	24 TSHH 449A/B	2nd STAGE ID FAN BEARING TEMP	200°F																																X		3 sec delay. SP from vendor info. UM-6-D-507 Note 19 specifies S/D 2nd stage, except when running in emergency mode.	1223/12	**196**	CH 2
111	24 PDAH 655	CLEAN LIQ STRAINER FILTER	10.0 psid																																	X		1650/02	NA	
112	24 FISL 755	MIST ELIM RET PUMP SEAL WATER	0.15 gpm																				X														5 sec delay. SP from instrument data sheet.	0620/12	**42**	CH 2
113	24 XA 773	1st STAGE ID FAN TROUBLE	Trouble	X																														X			Alarm response per RFI C-ANCDF-002. Trouble alarm initiated by ASD motor thermal overload which stops the motor.	1223/16	**152**	CH 2
114	24 SAH 773A	1st STAGE ID FAN SPEED	1800 rpm	X																														X			SP per RFI S-ALL-232.	1253/00	**174**	CH 2
115	**24 XS 903**	**24-FIT-903 STACK FLOW**	**MALF**																																	X		**1222/10**	**NA**	CH 2
116	24 TSH **966**	1st STAGE ID FAN WINDING TEMP	**300°F**	X																																	SP from vendor info. Alarm on high temp for any of 24-TSH-077A through F. Stop feed per UM-6-D-507 Note 17.	**1221/16**	**174**	CH 2

UMCDF DEACTIVATION FURNACE SYSTEM (DFS) POLLUTION ABATEMENT SYSTEM (PAS) AND PAS FILTER SYSTEM (PFS)

UMCDF DFS PAS/PFS

ALARM AND INTERLOCK MATRIX

P&IDs: UM-6-D-506,-507, -508, -509, -523, -524,-527, -530, and -531, UM-6-H-504
PLC: ICS-CONR-112; INTERLOCK: I-10

UMCDF DFS PAS/PFS

B8:010/

- 17 = F00 - SPARE
- 16 = F01 - CLOSE ISOLATION VALVES
- 15 = F02 - SHUTDOWN KILN LUBE OIL
- 14 = F03 - SHUTDOWN HEATED DISCHARGE CONVEYOR
- 13 = F04 - SHUTDOWN HEATED DISCHARGE CONVEYOR HEATERS
- 12 = F05 - SHUTDOWN KILN DRIVE
- 11 = F06 - OSCILLATE KILN DRIVE
- 10 = F07 - SHUTDOWN AFTERBURNER COMBUSTION AIR BLOWER
- 07 = F10 - SHUTDOWN AFTERBURNER #2
- 06 = F11 - SHUTDOWN AFTERBURNER #1
- 05 = F12 - SHUTDOWN KILN COMBUSTION AIR BLOWER
- 04 = F13 - SHUTDOWN KILN BURNER
- 03 = F14 - CLOSE KILN SHROUD DAMPERS
- 02 = F15 - OPEN KILN SHROUD DAMPERS
- 01 = F16 - SPARE
- 00 = F17 - STOP FEED

B8:011/

- 17 = MALFUNCTION
- 16 = P17 - S/D PFS-COOL-115A FAN B (NOTE 1)
- 15 = P16 - S/D PFS-COOL-115A FAN A (NOTE 1)
- 14 = P15 - SD PFS-COOL-115B FAN B (NOTE 1)
- 13 = P14 - S/D PFS-COOL-115B FAN A (NOTE 1)
- 12 = P13 - S/D MIST ELIM WATER RETURN PUMP
- 11 = P12 - SWITCHOVER BRINE PUMP TO BACKUP (NOTE 1)
- 10 = P11 - SWITCHOVER CL LIQ PUMP TO BACKUP (NOTE 1)
- 07 = P10 - BYPASS CARBON FILTER (NOTE 1)
- 06 = P07 - S/D BRINE PUMPS
- 05 = P06 - S/D CLEAN LIQUOR PUMPS
- 04 = P05 - S/D PFS-COOL-115C FAN B (NOTE 1)
- 03 = P04 - S/D PFS-COOL-115C FAN A (NOTE 1)
- 02 = P03 - S/D PFS-COOL-115D FAN B (NOTE 1)
- 01 = P02 - S/D PFS-COOL-115D FAN A (NOTE 1)
- 00 = P01 - S/D IST STAGE ID FAN
- PREALARM = P00 - S/D 2ND STAGE ID FAN

ITEM NUM	TAG NUMBER			DESCRIPTION	SET POINT	17	16	15	14	13	12	11	10	07	06	05	04	03	02	01	00	17	16	15	14	13	12	11	10	07	06	05	04	03	02	01	00	PREALARM	REMARKS	ALARM BIT B001:XX/XX	MASK WORD B8:XX	
117	24	TSHH	**966A/B**	1st STAGE ID FAN WINDING TEMP	**312°F**															X																			SP from vendor info. Alarm on high-high temp for any of 24-TSHH-966A **and B** thru F. UM-6-D-507 Note 19 specifies S/D 2nd stage, except when running in emergency mode.	**1223/04**	**152**	CH 2
118	24	IAH	967	1st STAGE ID FAN HIGH CURRENT	**595 amp**																																X	2-min delay on startup. **SP field change 07/22/02.**	1250/04	**NA**	CH 2
119	24	XAH	968	1st STAGE ID FAN VIBRATION	0.25 in/sec		X																															3 sec delay. See NOTE 5.	1252/14	**174**	CH 2
120	24	XSHH	968	1st STAGE ID FAN VIBRATION	0.5 in/sec															X																		3 sec delay. S/D 1st stage, except when running in emergency mode. See NOTE 5.	1222/00	156	
121	24	XA	970	1st STAGE ID FAN	MALF	X	X													X																		Start I-lock for 1st stage motor.	1261/11	198	
122	114	PDAH	080	PFS-COOL-115D CLEAN LIQ COOLER	**32 psid**																																X	**Field change 06/24/02.**	3050/06	NA	CH 2
123	114	PDAL	080	PFS-COOL-115D CLEAN LIQ COOLER	**14 psid**																																X		3051/06	NA	CH 2
124	114	TAH	155	PFS-COOL-115D CLEAN LIQ COOLER	135°F																																X	SP per RFI S-ALL-232.	3050/02	NA	
125	114	TAL	155	PFS-COOL-115D CLEAN LIQ COOLER	100°F																													X	X		X	SP per RFI S-ALL-232. Instant alarm, 120-sec delay for cooler S/D (see FAWB Note B-20).	3051/02	**48/48**	CH 2
126	114	XSH	156	PFS-COOL-115D FAN B VIBRATION	See NOTE 6																																X	5 sec delay (vendor info shows additional hardwired startup time delay relay)	3020/06	NA	
127	114	XSHH	157	PFS-COOL-115D FAN B VIBRATION	See NOTE 6																													X				5 sec delay (vendor info shows additional hardwired startup time delay relay)	3020/16	**46**	CH 2
128	114	XSH	158	PFS-COOL-115D FAN A VIBRATION	See NOTE 6																																X	5 sec delay (vendor info shows additional hardwired startup time delay relay)	3020/04	NA	
129	114	XSHH	159	PFS-COOL-115D FAN A VIBRATION	See NOTE 6																														X			5 sec delay (vendor info shows additional hardwired startup time delay relay)	3020/14	**48**	CH 2
130	114	SAH	160A	PFS-COOL-115D FAN B SPEED	**59.67 Hz**																													X				**1790 = 59.6667 Hz = 19.911 mA. Reset @ 1780 rpm.**	3050/16	**46**	CH 2
131	114	SAH	161A	PFS-COOL-115D FAN A SPEED	**59.67 Hz**																														X			**1790 = 59.6667 Hz = 19.911 mA. Reset @ 1780 rpm.**	3050/14	**48**	CH 2
132	114	XA	165	PFS-COOL-115D FAN B	TROUBLE																													X				5 sec delay. Alarm generated by XSHH-157 or VFD in fault lockout. VFD internally configured to stop motor (see RFI C-PBCDF-002).	3021/06	**46**	CH 2
133	114	XA	167	PFS-COOL-115D FAN A	TROUBLE																														X			5 sec delay. Alarm generated by XSHH-159 or VFD in fault lockout. VFD internally configured to stop motor (see RFI C-PBCDF-002).	3021/04	**48**	CH 2

UMCDF DEACTIVATION FURNACE SYSTEM (DFS) POLLUTION ABATEMENT SYSTEM (PAS) AND PAS FILTER SYSTEM (PFS)

UMCDF DFS PAS/PFS

ALARM AND INTERLOCK MATRIX

P&IDs: UM-6-D-506,-507, -508, -509, -523, -524,-527, -530, and -531, UM-6-H-504
PLC: ICS-CONR-112; INTERLOCK: I-10

UMCDF DFS PAS/PFS

F00 - SPARE
F01 - CLOSE ISOLATION VALVES
F02 - SHUTDOWN KILN LUBE OIL
F03 - SHUTDOWN HEATED DISCHARGE CONVEYOR
F04 - SHUTDOWN HEATED DISCHARGE CONVEYOR HEATERS
F05 - SHUTDOWN KILN DRIVE
F06 - OSCILLATE KILN DRIVE
F07 - SHUTDOWN AFTERBURNER COMBUSTION AIR BLOWER
F10 - SHUTDOWN AFTERBURNER #2
F11 - SHUTDOWN AFTERBURNER #1
F12 - SHUTDOWN KILN COMBUSTION AIR BLOWER
F13 - SHUTDOWN KILN BURNER
F14 - CLOSE KILN SHROUD DAMPERS
F15 - OPEN KILN SHROUD DAMPERS
F16 - SPARE
F17 - STOP FEED
MALFUNCTION

P17 - S/D PFS-COOL-115A FAN B (NOTE 1)
P16 - S/D PFS-COOL-115A FAN A (NOTE 1)
P15 - SD PFS-COOL-115B FAN B (NOTE 1)
P14 - S/D PFS-COOL-115B FAN A (NOTE 1)
P13 - S/D MIST ELIM WATER RETURN PUMP
P12 - SWITCHOVER BRINE PUMP TO BACKUP (NOTE 1)
P11 - SWITCHOVER CL LIQ PUMP TO BACKUP (NOTE 1)
P10 - BYPASS CARBON FILTER (NOTE 1)
P07 - S/D BRINE PUMPS
P06 - S/D CLEAN LIQUOR PUMPS
P05 - S/D PFS-COOL-115C FAN B (NOTE 1)
P04 - S/D PFS-COOL-115C FAN A (NOTE 1)
P03 - S/D PFS-COOL-115D FAN B (NOTE 1)
P02 - S/D PFS-COOL-115D FAN A (NOTE 1)
P01 - S/D IST STAGE ID FAN
P00 - S/D 2ND STAGE ID FAN
PREALARM

ITEM NUM	TAG NUMBER			DESCRIPTION	SET POINT	B8:010/ 17	16	15	14	13	12	11	10	07	06	05	04	03	02	01	00	B8:011/ 17	16	15	14	13	12	11	10	07	06	05	04	03	02	01	00	PREALARM	REMARKS	ALARM BIT B001:XX/XX	MASK WORD B8:XX	
134	114	FISL	332	CLEAN LIQ PUMP A SEAL WATER	0.15 gpm																																		3 sec delay. S/D PFS-PUMP-138 if selected as primary, which will cause 114-XA-340 to alarm. SP from instrument data sheet.	1620/04	NA	
135	114	FISL	335	CLEAN LIQ PUMP B SEAL WATER	0.15 gpm																																		3 sec delay. S/D PFS-PUMP-139 if selected as primary, which will cause 114-XA-346 to alarm. SP from instrument data sheet.	1620/06	NA	
136	114	XA	340	CLEAN LIQ PUMP A (PFS-PUMP-138)	MALF	X																						X											Switchover to backup pump on malf. alarm when PFS-PUMP-138 is selected as primary.	1660/11	**50**	CH 2
137	114	PAL	344	CLEAN LIQ PUMP DISCH PRESS	50 psig																							X											10 sec delay after pump startup. 3 sec delay before S/D of primary pump. SP & response per Oct 2000 ANCDF PAS/PFS review mtg.	1650/00	**50**	CH 2
138	114	PALL	344	CLEAN LIQ PUMP DISCH PRESS	25 psig		X															X	X	X	X						X	X	X	X	X				RCRA AWFCO DFS 24 **and MACT AWFCO DFS(M)-29**. Ref: UMAP815DFS. Response per Oct 2000 ANCDF PAS/PFS review mtg.	1650/04	186	CH 2
139	114	XA	346	CLEAN LIQ PUMP B (PFS-PUMP-139)	MALF	X																						X											Switchover to backup pump on malf. alarm when PFS-PUMP-139 is selected as primary.	1662/11	**50**	CH 2
140	114	TAH	417	PFS-BURN-103 EXHAUST TEMP	172°F																																	X	SP per RFI S-ALL-241 R1. Instantaneous alarm.	3451/14	NA	
141	114	TAHH	417	PFS-BURN-103 EXHAUST TEMP	170°F		X																																RCRA AWFCO DFS 37 **and MACT AWFCO DFS(M)-40**. ROHA. Ref: UMAP815DFS & UMSF981DFS.	3452/02	286	CH 2
142	114	TAL	417	PFS-BURN-103 EXHAUST TEMP	135°F																																	X	SP per RFI S-ALL-241 R1. Instantaneous alarm.	3451/16	NA	
143	114	TSHH	430	PFS-BURN-103 EXHAUST TEMP	180 F		X																						X										RCRA AWFCO DFS 37 **and MACT AWFCO DFS(M)-40**. Bypass filters per Note 3 on UM-6-D-524. Ref: UMAP815DFS.	3420/10	**296**	CH 2
144	114	XA	431	PFS-BURN-103 EXH MOIST ANALYZER	> 10% DIFF																																	X	Alarm when MIT-431A & B deviation exceeds 10% of upper range value.	3452/00	NA	
145	**114**	**MAH**	**431A**	**PFS-BURN-103 EXH MOISTURE ANAL**	**60%RH**																																	**X**		**3451/10**	**NA**	CH 2
146	**114**	**MAH**	**431B**	**PFS-BURN-103 EXH MOISTURE ANAL**	**60%RH**																																	**X**		**3451/12**	**NA**	CH 2
147	114	MAH	**431C**	PFS-BURN-103 EXH REL. HUMIDITY	52%RH																																	X	Rolling hourly average. Ref: UMAP815DFS.	**3452/10**	NA	CH 2
148	114	MAHH	**431C**	PFS-BURN-103 EXH REL. HUMIDITY	55%RH		X																																RCRA AWFCO DFS-38 **and MACT AWFCO DFS(M)-41.**. Rolling hourly average. Ref: UMAP815DFS.	**0023/06**	**288**	CH 2
149	114	MSHH	431A	PFS-BURN-103 EXH REL. HUMIDITY	80%RH		X																															**X**	RCRA AWFCO DFS-38. Instantaneous alarm. Ref: UMAP815DFS.	3420/00	**288**	CH 2

UMCDF DEACTIVATION FURNACE SYSTEM (DFS) POLLUTION ABATEMENT SYSTEM (PAS) AND PAS FILTER SYSTEM (PFS)

UMCDF DFS PAS/PFS

ALARM AND INTERLOCK MATRIX

P&IDs: UM-6-D-506,-507, -508, -509, -523, -524,-527, -530, and -531, UM-6-H-504
PLC: ICS-CONR-112; INTERLOCK: I-10

UMCDF DFS PAS/PFS

F00 - SPARE
F01 - CLOSE ISOLATION VALVES
F02 - SHUTDOWN KILN LUBE OIL
F03 - SHUTDOWN HEATED DISCHARGE CONVEYOR
F04 - SHUTDOWN HEATED DISCHARGE CONVEYOR HEATERS
F05 - SHUTDOWN KILN DRIVE
F06 - OSCILLATE KILN DRIVE
F07 - SHUTDOWN AFTERBURNER COMBUSTION AIR BLOWER
F10 - SHUTDOWN AFTERBURNER #2
F11 - SHUTDOWN AFTERBURNER #1
F12 - SHUTDOWN KILN COMBUSTION AIR BLOWER
F13 - SHUTDOWN KILN BURNER
F14 - CLOSE KILN SHROUD DAMPERS
F15 - OPEN KILN SHROUD DAMPERS
F16 - SPARE
F17 - STOP FEED
MALFUNCTION

P17 - S/D PFS-COOL-115A FAN B (NOTE 1)
P16 - S/D PFS-COOL-115A FAN A (NOTE 1)
P15 - SD PFS-COOL-115B FAN B (NOTE 1)
P14 - S/D PFS-COOL-115B FAN A (NOTE 1)
P13 - S/D MIST ELIM WATER RETURN PUMP
P12 - SWITCHOVER BRINE PUMP TO BACKUP (NOTE 1)
P11 - SWITCHOVER CL LIQ PUMP TO BACKUP (NOTE 1)
P10 - BYPASS CARBON FILTER (NOTE 1)
P07 - S/D BRINE PUMPS
P06 - S/D CLEAN LIQUOR PUMPS
P05 - S/D PFS-COOL-115C FAN B (NOTE 1)
P04 - S/D PFS-COOL-115C FAN A (NOTE 1)
P03 - S/D PFS-COOL-115D FAN B (NOTE 1)
P02 - S/D PFS-COOL-115D FAN A (NOTE 1)
P01 - S/D IST STAGE ID FAN
P00 - S/D 2ND STAGE ID FAN
PREALARM

ITEM NUM	TAG NUMBER	DESCRIPTION	SET POINT	B8:010/ 17	B8:010/ 16	B8:010/ 15	B8:010/ 14	B8:010/ 13	B8:010/ 12	B8:010/ 11	B8:010/ 10	B8:010/ 07	B8:010/ 06	B8:010/ 05	B8:010/ 04	B8:010/ 03	B8:010/ 02	B8:010/ 01	B8:010/ 00	B8:011/ 17	B8:011/ 16	B8:011/ 15	B8:011/ 14	B8:011/ 13	B8:011/ 12	B8:011/ 11	B8:011/ 10	B8:011/ 07	B8:011/ 06	B8:011/ 05	B8:011/ 04	B8:011/ 03	B8:011/ 02	B8:011/ 01	B8:011/ 00	REMARKS	ALARM BIT B001:XX/XX	MASK WORD B8:XX	
150	114 XS 431A	PFS-BURN-103 EXH MOIST ANALYZER	MALF	X	X																															On time delay. Remove instrument from ROHA calculation if it is the active unit.	3420/04	**166**	CH 2
151	114 **MSHH** 431B	PFS-BURN-103 EXH REL. HUMIDITY	**80%RH**																																X	Instantaneous alarm. Ref: UMAP815DFS.	**3420/02**	**288**	CH 2
152	114 XS 431B	PFS-BURN-103 EXH MOIST ANALYZER	MALF	X	X																															On time delay. Remove instrument from ROHA calculation if it is the active unit.	3420/06	**166**	CH 2
153	114 PDAH 440A	PFS-FILT-111 PREFILTER BANK	**1.2 in wc**																																X	Prealarm per UMAP815DFS.	3450/00	NA	CH 2
154	114 PDAHH 440A	PFS-FILT-111 PREFILTER BANK	**1.5 in wc**		X																															RCRA AWFCO DFS 35 **and MACT AWFCO DFS(M)-38**. Ref: UMAP815DFS.	**3454/00**	**200**	CH 2
155	**114 PDAL 440A**	**PFS-FILT-111 PREFILTER**	**0.2 in wc**																																**X**		**3454/02**	**NA**	CH 2
156	**114 PDALL 440A**	**PFS-FILT-111 PREFILTER**	**0.0 in wc**		**X**																															**MACT AWFCO DFS(M)-42.**	**3454/04**	**200**	CH 2
157	114 PDAH 440B	PFS-FILT-111 1st HEPA FILTER BANK	**2.7 in wc**																																X	Prealarm per UMAP815DFS.	3450/02	NA	CH 2
158	114 PDAHH 440B	PFS-FILT-111 1st HEPA FILTER BANK	**3.0 in wc**		X																															RCRA AWFCO DFS 36 **and MACT AWFCO DFS(M)-39**. Ref: UMAP815DFS.	**3454/06**	**200**	CH 2
159	**114 PDAL 440B**	**PFS-FILT-111 1st HEPA FILTER**	**0.2 in wc**																																**X**		**3454/10**	**NA**	CH 2
160	**114 PDALL 440B**	**PFS-FILT-111 1st HEPA FILTER**	**0.0 in wc**		**X**																															**MACT AWFCO DFS(M)-43.**	**3454/12**	**200**	CH 2
161	114 PDAH 440C	PFS-FILT-111 1st CARBON FILT BANK	**1.2 in wc**																																X	SP per RFI S-ALL-232.	3450/04	NA	CH 2
162	114 PDAH 440D	PFS-FILT-111 2nd CARBON FILT BANK	**1.2 in wc**																																X	SP per RFI S-ALL-232.	3450/06	NA	CH 2
163	114 PDAH 440E	PFS-FILT-111 3rd CARBON FILT BANK	**1.2 in wc**																																X	Carbon bank SP per RFI S-ALL-232. Note: # of carbon banks changed after RFI release.	**3450/10**	NA	CH 2
164	114 PDAH 440F	PFS-FILT-111 4th CARBON FILT BANK	**1.2 in wc**																																X	Carbon bank SP per RFI S-ALL-232. Note: # of carbon banks changed after RFI release.	**3450/12**	NA	CH 2
165	114 PDAH 440G	**PFS-FILT-111 SECONDARY CARBON FILTER BEDS**	**1.2 in wc**																																X	Carbon bank SP per RFI S-ALL-232. Note: # of carbon banks changed after RFI release.	**3452/14**	NA	CH 2
166	114 PDAH 440H	PFS-FILT-111 2nd HEPA FILTER BANK	**2.7 in wc**																																X	Prealarm per UMUF889PFS.	**3452/16**	NA	CH 2
167	114 PDAHH 440H	PFS-FILT-111 2nd HEPA FILTER BANK	**3.0 in wc**		X																															RCRA AWFCO **DFS-36 and MACT AWFCO DFS(M)-39**. Ref: UMUF889PFS.	**3454/14**	**200**	CH 2
168	**114 PDAL 440H**	**PFS-FILT-111 2nd HEPA FILTER BANK**	**0.2 in wc**																																**X**		**3454/16**	**NA**	CH 2
169	**114 PDALL 440H**	**PFS-FILT-111 2nd HEPA FILTER BANK**	**0.0 in wc**		**X**																															**MACT AWFCO DFS(M)-43.**	**3453/10**	**200**	CH 2
170	114 PDAH 440I	PFS-FILT-111 OVERALL DP	16 in wc																																X	Overall dP SP per RFI S-ALL-232. Note: # of carbon banks & notation changed after RFI release.	**3453/00**	NA	CH 2
171	114 PDAH 442A	PFS-FILT-112 PREFILTER BANK	**1.2 in wc**																																X	Prealarm per UMAP815DFS.	3450/14	NA	CH 2
172	114 PDAHH 442A	PFS-FILT-112 PREFILTER BANK	**1.5 in wc**		X																															RCRA AWFCO DFS-35 **and MACT AWFCO DFS(M)-38**. Ref: UMAP815DFS.	**3453/12**	**200**	CH 2

UMCDF DEACTIVATION FURNACE SYSTEM (DFS) POLLUTION ABATEMENT SYSTEM (PAS) AND PAS FILTER SYSTEM (PFS)

UMCDF DFS PAS/PFS

ALARM AND INTERLOCK MATRIX

UMCDF DFS PAS/PFS

P&IDs: UM-6-D-506,-507, -508, -509, -523, -524,-527, -530, and -531, UM-6-H-504
PLC: ICS-CONR-112; INTERLOCK: I-10

B8:010/

17	16	15	14	13	12	11	10	07	06	05	04	03	02	01	00
F00 - SPARE	F01 - CLOSE ISOLATION VALVES	F02 - SHUTDOWN KILN LUBE OIL	F03 - SHUTDOWN HEATED DISCHARGE CONVEYOR	F04 - SHUTDOWN HEATED DISCHARGE CONVEYOR HEATERS	F05 - SHUTDOWN KILN DRIVE	F06 - OSCILLATE KILN DRIVE	F07 - SHUTDOWN AFTERBURNER COMBUSTION AIR BLOWER	F10 - SHUTDOWN AFTERBURNER #2	F11 - SHUTDOWN AFTERBURNER #1	F12 - SHUTDOWN KILN COMBUSTION AIR BLOWER	F13 - SHUTDOWN KILN BURNER	F14 - CLOSE KILN SHROUD DAMPERS	F15 - OPEN KILN SHROUD DAMPERS	F16 - SPARE	F17 - STOP FEED

B8:011/

17	16	15	14	13	12	11	10	07	06	05	04	03	02	01	00
P17 - S/D PFS-COOL-115A FAN B (NOTE 1)	P16 - S/D PFS-COOL-115A FAN A (NOTE 1)	P15 - SD PFS-COOL-115B FAN B (NOTE 1)	P14 - S/D PFS-COOL-115B FAN A (NOTE 1)	P13 - S/D MIST ELIM WATER RETURN PUMP	P12 - SWITCHOVER BRINE PUMP TO BACKUP (NOTE 1)	P11 - SWITCHOVER CL LIQ PUMP TO BACKUP (NOTE 1)	P10 - BYPASS CARBON FILTER (NOTE 1)	P07 - S/D BRINE PUMPS	P06 - S/D CLEAN LIQUOR PUMPS	P05 - S/D PFS-COOL-115C FAN B (NOTE 1)	P04 - S/D PFS-COOL-115C FAN A (NOTE 1)	P03 - S/D PFS-COOL-115D FAN B (NOTE 1)	P02 - S/D PFS-COOL-115D FAN A (NOTE 1)	P01 - S/D IST STAGE ID FAN	P00 - S/D 2ND STAGE ID FAN

ITEM NUM	TAG NUMBER	DESCRIPTION	SET POINT	17	16	15	14	13	12	11	10	07	06	05	04	03	02	01	00	17	16	15	14	13	12	11	10	07	06	05	04	03	02	01	00	MALFUNCTION	PREALARM	REMARKS	ALARM BIT B001:XX/XX	MASK WORD B8:XX	
173	114 PDAL 442A	PFS-FILT-112 PREFILTER	0.2 in wc																																	X			3453/14	NA	CH 2
174	114 PDALL 442A	PFS-FILT-112 PREFILTER	0.0 in wc		X																																	MACT AWFCO DFS(M)-42.	3453/16	200	CH 2
175	114 PDAH 442B	PFS-FILT-112 1st HEPA FILTER BANK	2.7 in wc																																	X		Prealarm per UMAP815DFS.	3450/16	NA	CH 2
176	114 PDAHH 442B	PFS-FILT-112 1st HEPA FILTER BANK	3.0 in wc		X																																	RCRA AWFCO DFS-36 **and MACT AWFCO DFS(M)-39**. Ref: UMAP815DFS.	3455/00	200	CH 2
177	114 PDAL 442B	PFS-FILT-112 1st HEPA FILTER	0.2 in wc																																	X			3455/02	NA	CH 2
178	114 PDALL 442B	PFS-FILT-112 1st HEPA FILTER	0.0 in wc		X																																	MACT AWFCO DFS(M)-43.	3455/04	200	CH 2
179	114 PDAH 442C	PFS-FILT-112 1st CARBON FILT BANK	1.2 in wc																																	X		SP per RFI S-ALL-232.	3451/00	NA	CH 2
180	114 PDAH 442D	PFS-FILT-112 2nd CARBON FILT BANK	1.2 in wc																																	X		SP per RFI S-ALL-232.	3451/02	NA	CH 2
181	114 PDAH 442E	PFS-FILT-112 3rd CARBON FILT BANK	1.2 in wc																																	X		Carbon bank SP per RFI S-ALL-232. Note: # of carbon banks changed after RFI release.	3451/04	NA	CH 2
182	114 PDAH 442F	PFS-FILT-112 4th CARBON FILT BANK	1.2 in wc																																	X		Carbon bank SP per RFI S-ALL-232. Note: # of carbon banks changed after RFI release.	3451/06	NA	CH 2
183	114 PDAH 442G	PFS-FILT-111 SECONDARY CARBON FILTER BEDS	1.2 in wc																																	X		Carbon bank SP per RFI S-ALL-232. Note: # of carbon banks changed after RFI release.	3453/02	NA	CH 2
184	114 PDAH 442H	PFS-FILT-112 2nd HEPA FILTER BANK	2.7 in wc																																	X		Prealarm per UMUF889PFS.	3453/04	NA	CH 2
185	114 PDAHH 442H	PFS-FILT-112 2nd HEPA FILTER BANK	3.0 in wc		X																																	RCRA AWFCO **DFS-36 and MACT AWFCO DFS(M)-39**. Ref: UMUF889PFS.	3455/06	200	CH 2
186	114 PDAL 442H	PFS-FILT-112 2nd HEPA FILTER BANK	0.2 in wc																																	X			3455/10	NA	CH 2
187	114 PDALL 442H	PFS-FILT-112 2nd HEPA FILTER BANK	0.0 in wc		X																																	MACT AWFCO DFS(M)-43.	3455/12	200	CH 2
188	114 PDAH 442I	PFS-FILT-112 OVERALL DP	16 in wc																																	X		Overall dP SP per RFI S-ALL-232. Note: # of carbon banks & notation changed after RFI release.	3453/06	NA	CH 2
189	114 ZS 449B	PFS-FILT-111/112 BYPASS DAMPER	Not Closed		X																																	RCRA AWFCO DFS 39. Ref. UMAP815DFS. Agent feed permissive per UM-6-D-524 Note 4.	3461/14	166	CH 2
190	114 PDAH 511	PFS-COOL-115B CLEAN LIQ COOLER	32 psid																																	X		Field change 06/24/02.	0850/06	NA	CH 2
191	114 PDAL 511	PFS-COOL-115B CLEAN LIQ COOLER	14 psid																																	X			0850/04	NA	CH 2
192	114 PDAH 540	PFS-COOL-115C CLEAN LIQ COOLER	32 psid																																	X		Field change 06/24/02.	3050/04	NA	CH 2
193	114 PDAL 540	PFS-COOL-115C CLEAN LIQ COOLER	14 psid																																	X			3051/04	NA	CH 2
194	114 TAH 559	PFS-COOL-115C CLEAN LIQ COOLER	135°F																																	X		SP per RFI S-ALL-232.	3050/00	NA	
195	114 TAL 559	PFS-COOL-115C CLEAN LIQ COOLER	100°F																											X	X					X		SP per RFI S-ALL-232. Instant alarm, 120-sec delay for cooler S/D (see FAWB Note B-20).	3051/00	220	CH 2
196	114 XSH 560	PFS-COOL-115C FAN B VIBRATION	See NOTE 6																																	X		5 sec delay (vendor info shows additional hardwired startup time delay relay)	3020/02	NA	
197	114 XSHH 561	PFS-COOL-115C FAN B VIBRATION	See NOTE 6																											X								5 sec delay (vendor info shows additional hardwired startup time delay relay)	3020/12	216	CH 2

UMCDF DEACTIVATION FURNACE SYSTEM (DFS) POLLUTION ABATEMENT SYSTEM (PAS) AND PAS FILTER SYSTEM (PFS)

UMCDF DFS PAS/PFS

ALARM AND INTERLOCK MATRIX

UMCDF DFS PAS/PFS

P&IDs: UM-6-D-506,-507, -508, -509, -523, -524,-527, -530, and -531, UM-6-H-504
PLC: ICS-CONR-112; INTERLOCK: I-10

B8:010/

17	16	15	14	13	12	11	10	07	06	05	04	03	02	01	00
F00 - SPARE	F01 - CLOSE ISOLATION VALVES	F02 - SHUTDOWN KILN LUBE OIL	F03 - SHUTDOWN HEATED DISCHARGE CONVEYOR	F04 - SHUTDOWN HEATED DISCHARGE CONVEYOR HEATERS	F05 - SHUTDOWN KILN DRIVE	F06 - OSCILLATE KILN DRIVE	F07 - SHUTDOWN AFTERBURNER COMBUSTION AIR BLOWER	F10 - SHUTDOWN AFTERBURNER #2	F11 - SHUTDOWN AFTERBURNER #1	F12 - SHUTDOWN KILN COMBUSTION AIR BLOWER	F13 - SHUTDOWN KILN BURNER	F14 - CLOSE KILN SHROUD DAMPERS	F15 - OPEN KILN SHROUD DAMPERS	F16 - SPARE	F17 - STOP FEED

B8:011/

17	16	15	14	13	12	11	10	07	06	05	04	03	02	01	00
P17 - S/D PFS-COOL-115A FAN B (NOTE 1)	P16 - S/D PFS-COOL-115A FAN A (NOTE 1)	P15 - SD PFS-COOL-115B FAN B (NOTE 1)	P14 - S/D PFS-COOL-115B FAN A (NOTE 1)	P13 - S/D MIST ELIM WATER RETURN PUMP	P12 - SWITCHOVER BRINE PUMP TO BACKUP (NOTE 1)	P11 - SWITCHOVER CL LIQ PUMP TO BACKUP (NOTE 1)	P10 - BYPASS CARBON FILTER (NOTE 1)	P07 - S/D BRINE PUMPS	P06 - S/D CLEAN LIQUOR PUMPS	P05 - S/D PFS-COOL-115C FAN B (NOTE 1)	P04 - S/D PFS-COOL-115C FAN A (NOTE 1)	P03 - S/D PFS-COOL-115D FAN B (NOTE 1)	P02 - S/D PFS-COOL-115D FAN A (NOTE 1)	P01 - S/D IST STAGE ID FAN	P00 - S/D 2ND STAGE ID FAN

MALFUNCTION

PREALARM

ITEM NUM	TAG NUMBER	DESCRIPTION	SET POINT	17	16	15	14	13	12	11	10	07	06	05	04	03	02	01	00	17	16	15	14	13	12	11	10	07	06	05	04	03	02	01	00	MALFUNCTION	PREALARM	REMARKS	ALARM BIT B001:XX/XX	MASK WORD B8:XX	
198	114 XSH 563	PFS-COOL-115C FAN A VIBRATION	See NOTE 6																																		X	5 sec delay (vendor info shows additional hardwired startup time delay relay)	3020/00	NA	
199	114 XSHH 564	PFS-COOL-115C FAN A VIBRATION	See NOTE 6																												X							5 sec delay (vendor info shows additional hardwired startup time delay relay)	3020/10	218	CH 2
200	114 SAH 565A	PFS-COOL-115C FAN B SPEED	59.67 Hz																											X								1790 = 59.6667 Hz = 19.911 mA. Reset @ 1780 rpm.	3050/12	216	CH 2
201	114 SAH 566A	PFS-COOL-115C FAN A SPEED	59.67 Hz																												X							1790 = 59.6667 Hz = 19.911 mA. Reset @ 1780 rpm.	3050/10	218	CH 2
202	114 XA 570	PFS-COOL-115C FAN B	TROUBLE																											X								5 sec delay. Alarm generated by XSHH-561 or VFD in fault lockout. VFD internally configured to stop motor (see RFI C-PBCDF-002).	3021/02	216	CH 2
203	114 XA 572	PFS-COOL-115C FAN A	TROUBLE																												X							5 sec delay. Alarm generated by XSHH-564 or VFD in fault lockout. VFD internally configured to stop motor (see RFI C-PBCDF-002).	3021/00	218	CH 2
204	114 TAH 578	PFS-COOL-115B CLEAN LIQ COOLER	135°F																																		X	SP per RFI S-ALL-232.	0850/16	NA	
205	114 TAL 578	PFS-COOL-115B CLEAN LIQ COOLER	100°F																			X	X														X	SP per RFI S-ALL-232. Instant alarm, 120-sec delay for cooler S/D (see FAWB Note B-20).	0850/14	222	CH 2
206	114 XSH 579	PFS-COOL-115B FAN B VIBRATION	See NOTE 6																																		X	5 sec delay (vendor info shows additional hardwired startup time delay relay)	0820/06	NA	
207	114 XSHH 580	PFS-COOL-115B FAN B VIBRATION	See NOTE 6																			X																5 sec delay (vendor info shows additional hardwired startup time delay relay)	0820/16	228	CH 2
208	114 XSH 581	PFS-COOL-115B FAN A VIBRATION	See NOTE 6																																		X	5 sec delay (vendor info shows additional hardwired startup time delay relay)	0820/04	NA	
209	114 XSHH 592	PFS-COOL-115B FAN A VIBRATION	See NOTE 6																				X															5 sec delay (vendor info shows additional hardwired startup time delay relay)	0820/14	230	CH 2
210	114 SAH 593A	PFS-COOL-115B FAN B SPEED	59.67 Hz																			X																1790 = 59.6667 Hz = 19.911 mA. Reset @ 1780 rpm.	0851/06	228	CH 2
211	114 SAH 594A	PFS-COOL-115B FAN A SPEED	59.67 Hz																				X															1790 = 59.6667 Hz = 19.911 mA. Reset @ 1780 rpm.	0851/04	230	CH 2
212	114 XA 598	PFS-COOL-115B FAN B	TROUBLE																			X																5 sec delay. Alarm generated by XSHH-580 or VFD in fault lockout. VFD internally configured to stop motor (see RFI C-PBCDF-002).	0821/06	228	CH 2
213	114 XA 600	PFS-COOL-115B FAN A	TROUBLE																				X															5 sec delay. Alarm generated by XSHH-592 or VFD in fault lockout. VFD internally configured to stop motor (see RFI C-PBCDF-002).	0821/04	230	CH 2

UMCDF DEACTIVATION FURNACE SYSTEM (DFS) POLLUTION ABATEMENT SYSTEM (PAS) AND PAS FILTER SYSTEM (PFS)

UMCDF DFS PAS/PFS

ALARM AND INTERLOCK MATRIX

UMCDF DFS PAS/PFS

P&IDs: UM-6-D-506,-507, -508, -509, -523, -524,-527, -530, and -531, UM-6-H-504
PLC: ICS-CONR-112; INTERLOCK: I-10

B8:010/

- 17 = F00 - SPARE
- 16 = F01 - CLOSE ISOLATION VALVES
- 15 = F02 - SHUTDOWN KILN LUBE OIL
- 14 = F03 - SHUTDOWN HEATED DISCHARGE CONVEYOR
- 13 = F04 - SHUTDOWN HEATED DISCHARGE CONVEYOR HEATERS
- 12 = F05 - SHUTDOWN KILN DRIVE
- 11 = F06 - OSCILLATE KILN DRIVE
- 10 = F07 - SHUTDOWN AFTERBURNER COMBUSTION AIR BLOWER
- 07 = F10 - SHUTDOWN AFTERBURNER #2
- 06 = F11 - SHUTDOWN AFTERBURNER #1
- 05 = F12 - SHUTDOWN KILN COMBUSTION AIR BLOWER
- 04 = F13 - SHUTDOWN KILN BURNER
- 03 = F14 - CLOSE KILN SHROUD DAMPERS
- 02 = F15 - OPEN KILN SHROUD DAMPERS
- 01 = F16 - SPARE
- 00 = F17 - STOP FEED

B8:011/

- 17 = P17 - S/D PFS-COOL-115A FAN B (NOTE 1)
- 16 = P16 - S/D PFS-COOL-115A FAN A (NOTE 1)
- 15 = P15 - SD PFS-COOL-115B FAN B (NOTE 1)
- 14 = P14 - S/D PFS-COOL-115B FAN A (NOTE 1)
- 13 = P13 - S/D MIST ELIM WATER RETURN PUMP
- 12 = P12 - SWITCHOVER BRINE PUMP TO BACKUP (NOTE 1)
- 11 = P11 - SWITCHOVER CL LIQ PUMP TO BACKUP (NOTE 1)
- 10 = P10 - BYPASS CARBON FILTER (NOTE 1)
- 07 = P07 - S/D BRINE PUMPS
- 06 = P06 - S/D CLEAN LIQUOR PUMPS
- 05 = P05 - S/D PFS-COOL-115C FAN B (NOTE 1)
- 04 = P04 - S/D PFS-COOL-115C FAN A (NOTE 1)
- 03 = P03 - S/D PFS-COOL-115D FAN B (NOTE 1)
- 02 = P02 - S/D PFS-COOL-115D FAN A (NOTE 1)
- 01 = P01 - S/D IST STAGE ID FAN
- 00 = P00 - S/D 2ND STAGE ID FAN

MALFUNCTION

PREALARM

ITEM NUM	TAG NUMBER	DESCRIPTION	SET POINT	B8:010/ 17	16	15	14	13	12	11	10	07	06	05	04	03	02	01	00	B8:011/ 17	16	15	14	13	12	11	10	07	06	05	04	03	02	01	00	MALFUNCTION	PREALARM	REMARKS	ALARM BIT B001:XX/XX	MASK WORD B8:XX	
214	114 TAH 608	PFS-COOL-115A CLEAN LIQ COOLER	135°F																																		X	SP per RFI S-ALL-232.	0850/12	NA	
215	114 TAL 608	PFS-COOL-115A CLEAN LIQ COOLER	100°F																	X	X																X	SP per RFI S-ALL-232. Instant alarm, 120-sec delay for cooler S/D (see FAWB Note B-20).	0850/10	**234**	CH 2
216	114 XSH 609	PFS-COOL-115A FAN B VIBRATION	See NOTE 6																																		X	5 sec delay (vendor info shows additional hardwired startup time delay relay)	0820/02	NA	
217	114 XSHH 610	PFS-COOL-115A FAN B VIBRATION	See NOTE 6																	X																		5 sec delay (vendor info shows additional hardwired startup time delay relay)	0820/12	**236**	CH 2
218	114 XSH 611	PFS-COOL-115A FAN A VIBRATION	See NOTE 6																																		X	5 sec delay (vendor info shows additional hardwired startup time delay relay)	0820/00	NA	
219	114 XSHH 612	PFS-COOL-115A FAN A VIBRATION	See NOTE 6																		X																	5 sec delay (vendor info shows additional hardwired startup time delay relay)	0820/10	**238**	CH 2
220	114 SAH 613A	PFS-COOL-115A FAN B SPEED	**59.67 Hz**																	X																		**1790 = 59.6667 Hz = 19.911 mA. Reset @ 1780 rpm.**	0851/02	**236**	CH 2
221	114 SAH 614A	PFS-COOL-115A FAN A SPEED	**59.67 Hz**																		X																	**1790 = 59.6667 Hz = 19.911 mA. Reset @ 1780 rpm.**	0851/00	**238**	CH 2
222	114 PDAH 615	PFS-COOL-115A CLEAN LIQ COOLER	**32 psid**																																		X	**Field Change 06/24/02.**	0850/02	NA	CH 2
223	114 PDAL 615	PFS-COOL-115A CLEAN LIQ COOLER	**14 psid**																																		X		0850/00	NA	CH 2
224	114 XA 623	PFS-COOL-115A FAN B	TROUBLE																	X																		5 sec delay. Alarm generated by XSHH-610 or VFD in fault lockout. VFD internally configured to stop motor (see RFI C-PBCDF-002).	0821/02	**236**	CH 2
225	114 XA 625	PFS-COOL-115A FAN A	TROUBLE																		X																	5 sec delay. Alarm generated by XSHH-612 or VFD in fault lockout. VFD internally configured to stop motor (see RFI C-PBCDF-002).	0821/00	**238**	CH 2
226	114 BSLL 716	PFS-BURN-103 BURNER LOCKOUT	LOCKOUT		X																																	Stop feed per RFI C-UMCDF-003 (stop feed not shown on UM-6-D-524).	**3421/00**	**184**	CH 2
227	114 XA 780	PFS-BURN-103 BURNER TROUBLE	TROUBLE																																		X	Prealarm per RFI C-UMCDF-003 (UM-6-D-524 shows stop feed).	**3420/16**	NA	CH 2
228	114 TISH 874	PFS-BURN-103 EXHAUST TEMP	168°F																																		X	On time delay. SP per DSIC.	3420/12	NA	
229	114 TSHH 874	PFS-BURN-103 EXHAUST TEMP	176°F																																			On time delay. S/D PFS-BURN-103. SP per DSIC.	3420/14	NA	
230	**PAS701AR**	ACAMS COMMON STACK	SEE NOTE 4		X																																	RCRA AWFCO DFS 21. Stop feed for DFS, LIC, and MPF. Ref: UMAP815DFS.	2620/16	240	CH 2
231	**PAS701AR**	ACAMS COMMON STACK	MALF	X	X																																	RCRA AWFCO DFS 21. Stop feed for DFS, LIC, and MPF. See NOTE 4. Ref: UMAP815DFS.	2620/16	240	CH 2
232	**PAS701AR**	ACAMS COMMON STACK	OFFLINE		X																																	RCRA AWFCO DFS 21. Stop feed for DFS, LIC, and MPF. See NOTE 4. Ref: UMAP815DFS.	2620/16	240	CH 2

UMCDF DEACTIVATION FURNACE SYSTEM (DFS) POLLUTION ABATEMENT SYSTEM (PAS) AND PAS FILTER SYSTEM (PFS)

UMCDF DFS PAS/PFS

ALARM AND INTERLOCK MATRIX

UMCDF DFS PAS/PFS

P&IDs: UM-6-D-506,-507, -508, -509, -523, -524,-527, -530, and -531, UM-6-H-504
PLC: ICS-CONR-112; INTERLOCK: I-10

F00 - SPARE
F01 - CLOSE ISOLATION VALVES
F02 - SHUTDOWN KILN LUBE OIL
F03 - SHUTDOWN HEATED DISCHARGE CONVEYOR
F04 - SHUTDOWN HEATED DISCHARGE CONVEYOR HEATERS
F05 - SHUTDOWN KILN DRIVE
F06 - OSCILLATE KILN DRIVE
F07 - SHUTDOWN AFTERBURNER COMBUSTION AIR BLOWER
F10 - SHUTDOWN AFTERBURNER #2
F11 - SHUTDOWN AFTERBURNER #1
F12 - SHUTDOWN KILN COMBUSTION AIR BLOWER
F13 - SHUTDOWN KILN BURNER
F14 - CLOSE KILN SHROUD DAMPERS
F15 - OPEN KILN SHROUD DAMPERS
F16 - SPARE
F17 - STOP FEED
MALFUNCTION

P17 - S/D PFS-COOL-115A FAN B (NOTE 1)
P16 - S/D PFS-COOL-115A FAN A (NOTE 1)
P15 - SD PFS-COOL-115B FAN B (NOTE 1)
P14 - S/D PFS-COOL-115B FAN A (NOTE 1)
P13 - S/D MIST ELIM WATER RETURN PUMP
P12 - SWITCHOVER BRINE PUMP TO BACKUP (NOTE 1)
P11 - SWITCHOVER CL LIQ PUMP TO BACKUP (NOTE 1)
P10 - BYPASS CARBON FILTER (NOTE 1)
P07 - S/D BRINE PUMPS
P06 - S/D CLEAN LIQUOR PUMPS
P05 - S/D PFS-COOL-115C FAN B (NOTE 1)
P04 - S/D PFS-COOL-115C FAN A (NOTE 1)
P03 - S/D PFS-COOL-115D FAN B (NOTE 1)
P02 - S/D PFS-COOL-115D FAN A (NOTE 1)
P01 - S/D IST STAGE ID FAN
P00 - S/D 2ND STAGE ID FAN
PREALARM

ITEM NUM	TAG NUMBER	DESCRIPTION	SET POINT	B8:010/ 17	16	15	14	13	12	11	10	07	06	05	04	03	02	01	00	B8:011/ 17	16	15	14	13	12	11	10	07	06	05	04	03	02	01	00	REMARKS	ALARM BIT B001:XX/XX	MASK WORD B8:XX	
233	PAS701AR	ACAMS COMMON STACK	NOT STAGGERED		X																															RCRA AWFCO DFS 21. Stop feed for DFS, LIC, and MPF. See NOTE 4. Ref: UMAP815DFS.	2620/16	240	CH 2
234	PAS702AR	ACAMS DFS PAS	SEE NOTE 4		X																															RCRA AWFCO DFS 19. Ref: UMAP815DFS.	2620/06	132	CH 2
235	PAS702AR	ACAMS DFS PAS	MALF	X	X																															RCRA AWFCO DFS 19. Ref: UMAP815DFS. See NOTE 4.	2620/06	132	CH 2
236	PAS702AR	ACAMS DFS PAS	OFFLINE		X																															RCRA AWFCO DFS 19. Ref: UMAP815DFS. See NOTE 4.	2620/06	132	CH 2
237	PAS720AR	ACAMS DFS CYCLONE ENCLOSURE	SEE NOTE 4		X																															RCRA AWFCO DFS 20. Ref: UMAP815DFS.	TBD	TBD	CH 2
238	PAS720AR	ACAMS DFS CYCLONE ENCLOSURE	MALF	X	X																															RCRA AWFCO DFS 20. Ref: UMAP815DFS. See NOTE 4.	TBD	TBD	CH 2
239	PAS720AR	ACAMS DFS CYCLONE ENCLOSURE	OFFLINE		X																															RCRA AWFCO DFS 20. Ref: UMAP815DFS. See NOTE 4.	TBD	TBD	CH 2
240	**MON-ACAM-353**	**ACAMS DFS UPSTREAM OF PFS UNIT**			**X**																															**RCRA AWFCO DFS-40**			CH 2
241		BRA TANKS LVL HI-HI / UNAVAILABLE	DICO		X																															RCRA AWFCO DFS **22**. See BRA FAWB for tag #s and setpoints.	B4:23/01	210	CH 2
242		**BRA TANKS HI-HI LEVEL**			**X**																															**DICO FROM C108 AWFCO**	**B4:23/11**	**210**	CH 2
243	**114 PDIT 454A/B/H**				**X**																															**DICO FROM C114 AWFCO**	**B4:36/11**	**206**	CH 2
244	**114 PDIT 436A/B/H**				**X**																															**DICO FROM C119 AWFCO**	**B4:42/01**	**208**	CH 2
245	**114 PDIT 438A/B/H**				**X**																															**DICO FROM C113 AWFCO**	**B4:34/13**	**202**	CH 2
246	**114 PDIT 487A/B/H**				**X**																															**DICO FROM C113 AWFCO**	**B4:34/12**	**204**	CH 2

NOTE 1: P02, P03, P04, P05, P10, P11, P12, P14, P15, P16, and P17 responses are not part of the deathwish relay. These responses are included as column headings for presentation clarity.
NOTE 2: The UMCDF CEMS alarm configuration is based on ECP UMAC908MON, R2 and conversations with UMCDF SC personnel. ECPs UMAP815DFS, UMUF872DFS, and UMSF981DFS were also used as references for RCRA and MACT AWFCOs. Setpoints may be modified based on trial burn results.
NOTE 3: 24-LSHHH-032 additional interlocks: 1) close 24-XV-026 and inhibit timer activation, 2) close 24-XY-380B/D, 3) close 24-XY-382B/D. Also when controllers are in AUTO, 1) close 24-LV-031, 2) close 24-LV-010, 3) close 24-AV-034, 4) close 24-AV-007.
NOTE 4: Allowable stack concentration (ASC) for chemical agent are (mg/m3) : GB= 0.0003, H/HD/HT= 0.03, and VX=0.0003. RCRA AWFCO setpoint is 1 ASC. In addition, a RCRA AWFCO is initiated if: 1) Less than two ACAMS are online monitoring the exhaust gas, 2) sampling periods for online ACAMS are not staggered, 3) online ACAMS is in malfunction while in the sampling mode.
NOTE 5: PAS exhaust blower vibration alarms reflect the current design. Per RFI C-ANCDF-005, the blower foundation design requires that the foundation vibration be < 1 mil double amplitude. This requirement was the basis for recommended setpoints in RFI S-ALL-0232. The vibration alarm setpoints may be changed, or new alarms added, to meet the foundation vibration design limits.
NOTE 6: After the Oct 2000 AN PAS/PFS review meeting, the DSIC investigated the clean liquor air cooler vibration alarm setpoints. They found that the Murphy vibration switches are set by turning an uncalibrated screw. Specific vibration units could not be determined. The high vibration switch is set by turning the screw 1/4 turn past its start-up trip point and the high-high switch is set by turning the screw 1/2 turn past its start-up trip point.

UMCDF LIQUID INCINERATOR (LIC) #1 POLLUTION ABATEMENT SYSTEM (PAS) AND PAS FILTER SYSTEM (PFS)

UMCDF LIC 1 PAS/PFS — ALARM AND INTERLOCK MATRIX — **UMCDF LIC 1 PAS/PFS**

P&IDs: UM-1-D-527/1, UM-6-D-501, -502, -517/1, -523, -535, and -539; PLC: ICS-CONR-114; INTERLOCK: I-7

CH 4

F00 - SPARE
F01 - SPARE
F02 - SPARE
F03 - SPARE
F04 - S/D AGENT PUMPS
F05 - LOCKOUT SECONDARY BURNER (NOTE 1)
F06 - LOCKOUT PRIMARY BURNER (NOTE 1)
F07 - INHIBIT FUEL OIL PURGE OF AGENT LINE
F10 - S/D SEC COMB AIR BLOWER
F11 - S/D PRI COMB AIR BLOWER
F12 - SPARE
F13 - CLOSE DECON/PRW VALVE
F14 - STOP DECON FEED/SWITCH TO PRW
F15 - STOP AGENT FEED
F16 - S/D SEC BURNER
F17 - S/D PRI BURNER
MALFUNCTION

P17 - S/D PFS-COOL-113A/213A FAN B (NOTE 1)
P16 - S/D PFS-COOL-113A/213A FAN A (NOTE 1)
P15 - S/D PFS-COOL-113B/213B FAN B (NOTE 1)
P14 - S/D PFS-COOL-113B/213B FAN A (NOTE 1)
P13 - OPEN QUENCH EMERG. PRW (NOTE 1)
P12 - S/D MIST ELIM WATER RETURN PMP
P11 - BKUP BRINE PUMP ON (NOTE 1)
P10 - BKUP CLEAN LIQ PUMP ON (NOTE 1)
P07 - SPARE
P06 - S/D BRINE PUMPS
P05 - S/D CLEAN LIQUOR PUMPS
P04 - S/D 1ST & 2ND STAGE ID FAN
P03 - SPARE
P02 - BYPASS CARBON FILTER (NOTE 1)
P01 - S/D IST STAGE ID FAN
P00 - S/D 2ND STAGE ID FAN
PREALARM

ITEM NUM	LIC 1 TAG NUMBER	DESCRIPTION	SET POINT	B8:010/ 17	16	15	14	13	12	11	10	07	06	05	04	03	02	01	00	B8:011/ 17	16	15	14	13	12	11	10	07	06	05	04	03	02	01	00		REMARKS	ALARM BIT B001:XX/XX	MASK WORD B8:XX	
1	24 TSH 058A-F	2nd STAGE ID FAN WINDING TEMP	320°F																																	X	SP from vendor info. Alarm on high temp for any of 24-TSH-058A through F.	1222/14	NA	CH 1
2	24 TSHH 058A-F	2nd STAGE ID FAN WINDING TEMP	**312°F**			X	X				X																								X		SP from vendor info. Alarm on high-high temp for any of 24-TSHH-058A through F. UM-6-D-517 Note 14 specifies S/D 2nd stage, except when running in emergency mode.	1220/00	128	CH 1
3	24 XA 070	1st & 2nd STAGE ID FAN	NOT RUNNING		X	X	X	X		X	X	X																										I:313/00 I:313/02	116	
4	24 XA 071	ID FAN 2ND STAGE MTR	MALF	X		X	X				X																								X		Start I-lock for 2nd stage motor.	1263/11	**104**	CH 1
5	24 XA 072	2nd STAGE ID FAN TROUBLE	Trouble			X	X				X																								X		Alarm response per RFI C-ANCDF-002. Trouble alarm initiated by ASD motor thermal overload which stops the motor.	1223/06	**104**	CH 1
6	24 SAH 072A	2nd STAGE ID FAN SPEED	1800 rpm			X	X				X																										SP per RFI S-ALL-232.	1250/16	**96**	CH 1
7	**24 ADH 078**	**LIC EXH GAS CO DIFFERENTIAL**	**+/- 12 ppm**																																	X	**Differential alarm.**	**1255/16**	**NA**	CH 1
8	24 AAH 078A	LIC EXH GAS CO TO STACK	160 ppm																																	X	Instantaneous alarm. Corrected to 7% O2 dry basis. See NOTE 2.	**1255/02**	NA	CH 1
9	**24 AAHH 078A**	**LIC EXH GAS CO TO STACK**	**170 ppm**			X	X				X																										**Instantaneous stop feed. Corrected to 7% O2 dry basis. See NOTE 2.**	**1255/00**	**22**	CH 1
10	24 **MAH** 078A	LIC EXH GAS STACK CO MOISTURE	**38 %**			X	X				X																										Switch racks on high humidity. If second unit also alarms on high humidity, stop feed. See NOTE 2.	**1224/10**	**36**	CH 1
11	24 XS 078A	LIC EXH GAS **CO ANALYZER MALF**	MALF	X		X	X				X																										Stop feed on malf. alarm only if 24-AIT-078B is also in malf. or is in "calibrate" mode. **Activation has 5 sec delay.** See NOTE 2.	**1224/04**	**36**	CH 1
12	24 HS 078A/078B	BOTH LIC 1 PAS CO ANAL. IN CAL**IB**	In Calib			X	X				X																										**Stop Feed with both analyzers in "calibrate". See NOTE 8.**	1222/06	246	CH 1
13	24 AAH 078B	LIC EXH GAS CO TO STACK	160 ppm																																	X	Instantaneous alarm. Corrected to 7% O2 dry basis. See NOTE 2.	**1255/06**	NA	CH 1
14	**24 AAHH 078B**	**LIC EXH GAS CO TO STACK**	**170 ppm**			X	X				X																										**Instantaneous stop feed. Corrected to 7% O2 dry basis. See NOTE 2.**	**1255/04**	**22**	CH 1
15	24 **MAH** 078B	LIC EXH GAS STACK CO MOISTURE	**38 %**			X	X				X																										Switch racks on high humidity. If second unit also alarms on high humidity, stop feed. See NOTE 2.	**1224/12**	**36**	CH 1

UMCDF LIQUID INCINERATOR (LIC) #1 POLLUTION ABATEMENT SYSTEM (PAS) AND PAS FILTER SYSTEM (PFS)

UMCDF LIC 1 PAS/PFS — ALARM AND INTERLOCK MATRIX — **UMCDF LIC 1 PAS/PFS**

P&IDs: UM-1-D-527/1, UM-6-D-501, -502, -517/1, -523, -535, and -539; PLC: ICS-CONR-114; INTERLOCK: I-7

B8:010/

F00 - SPARE
F01 - SPARE
F02 - SPARE
F03 - SPARE
F04 - S/D AGENT PUMPS
F05 - LOCKOUT SECONDARY BURNER (NOTE 1)
F06 - LOCKOUT PRIMARY BURNER (NOTE 1)
F07 - INHIBIT FUEL OIL PURGE OF AGENT LINE
F10 - S/D SEC COMB AIR BLOWER
F11 - S/D PRI COMB AIR BLOWER
F12 - SPARE
F13 - CLOSE DECON/PRW VALVE
F14 - STOP DECON FEED/SWITCH TO PRW
F15 - STOP AGENT FEED
F16 - S/D SEC BURNER
F17 - S/D PRI BURNER
MALFUNCTION

B8:011/

P17 - S/D PFS-COOL-113A/213A FAN B (NOTE 1)
P16 - S/D PFS-COOL-113A/213A FAN A (NOTE 1)
P15 - S/D PFS-COOL-113B/213B FAN B (NOTE 1)
P14 - S/D PFS-COOL-113B/213B FAN A (NOTE 1)
P13 - OPEN QUENCH EMERG. PRW (NOTE 1)
P12 - S/D MIST ELIM WATER RETURN PMP
P11 - BKUP BRINE PUMP ON (NOTE 1)
P10 - BKUP CLEAN LIQ PUMP ON (NOTE 1)
P07 - SPARE
P06 - S/D BRINE PUMPS
P05 - S/D CLEAN LIQUOR PUMPS
P04 - S/D 1ST & 2ND STAGE ID FAN
P03 - SPARE
P02 - BYPASS CARBON FILTER (NOTE 1)
P01 - S/D IST STAGE ID FAN
P00 - S/D 2ND STAGE ID FAN
PREALARM

ITEM NUM	LIC 1 TAG NUMBER			DESCRIPTION		SET POINT	17	16	15	14	13	12	11	10	07	06	05	04	03	02	01	00	17	16	15	14	13	12	11	10	07	06	05	04	03	02	01	00	PREALARM	REMARKS	ALARM BIT B001:XX/XX	MASK WORD B8:XX	
16	24	XS	078B	LIC EXH GAS **CO ANALYZER MALF**		MALF	X			X	X				X																									Stop feed on malf. alarm only if 24-AIT-078A is also in malf. or is in "calibrate" mode. **Activation has 5 sec delay.** See NOTE 2.	**1224/06**	**36**	CH 1
17	24	AAH	078C	LIC EXH GAS	CO TO STACK	90 ppm																																	X	ROHA. Corrected to 7% O2 dry basis. See NOTE 2.	**1255/12**	NA	
18	24	AAHH	078C	LIC EXH GAS	CO TO STACK	100 ppm				X	X				X																									RCRA AWFCO LIC-12 and MACT AWFCO LIC(M)-**15**. ROHA. Corrected to 7% O2 dry basis. See NOTE 2.	**1255/10**	**22**	CH 1
19	24	XAH	079	2nd STAGE ID FAN VIBRATION		0.25 in/sec																																	X	**Time** delay. See NOTE 5.	1251/06	**NA**	CH 1
20	24	XSHH	079	2nd STAGE ID FAN VIBRATION		0.5 in/sec			**X**	**X**					**X**																							X	**Time** delay. S/D 2nd stage, except when running in emergency mode. See NOTE 5.	1220/06	64	CH 1
21	24	PDAH	082	PAS SCRUBBER	MIST PAD	2 in wc																																	X		1651/06	NA	
22	24	DAH	083	PAS QUENCH	BRINE DENSITY	**1.09 sg**																																	X	Setpoint from RFI S-ALL-0232 but will be revised based on UMSF973LIC.	1850/16	NA	CH 1
23	24	DAHH	083	PAS QUENCH	BRINE DENSITY	1.16 sg				X	X				X																									RCRA**/MACT** AWFCO LIC-24 **/LIC(M)-27**. Ref. UMSF973LIC.	1851/02	228	CH 1
24	24	DAHH	083A	PAS QUENCH	BRINE DENSITY	**1.16 sg**				X	X				X																									MACT AWFCO LIC(M)-**28**. Based on 12-hr rolling avg. Ref. UMSF973LIC.	**1852/04**	**44**	CH 1
25	24	FAL	084	PAS QUENCH	BRINE	60 gpm																																	X		1450/00	NA	
26	24	FAL	088	BRINE TO LIC	VENTURI SCRBR	130 gpm																																	X	**Time** delay. Prealarm per UMAP668LIC. SP per RFI C-ANCDF-003R1.	**1850/02**	NA	CH 1
27	24	FALL	088	BRINE TO LIC	VENTURI SCRBR	126 gpm				X	X				X																									RCRA **/MACT**AWFCO LIC 23 **/LIC(M)-25**. Ref. UMAP668LIC & RFI C-ANCDF-003R1.	**1851/14**	66	CH 1
28	24	FALL	088A	BRINE TO LIC	VENTURI SCRBR	**126 gpm**				X	X				X																									MACT AWFCO LIC(M)-**26**. ROHA. Ref. UMSF973LIC.	**1852/02**	**44**	CH 1
29	24	PDAH	089	PAS VENTURI	BRINE FILTER	10.0 psid																																	X		1850/14	NA	
30	24	TSHH	089	PAS QUENCH	OVERHEAD	225 F				X	X				X												X													RCRA AWFCO LIC 22. Ref. UMAP668LIC & UMSF973LIC. See FAWB Note B-7.	1420/00	68	
31	24	PDAH	090	PAS VENTURI	SCRUBBER	SP+10 in wc																																	X	SP=setpoint entered in controller by operator	1850/06	NA	
32	24	PDAL	090	PAS VENTURI	SCRUBBER	25 in wc																																	X		1850/04	NA	
33	24	PDALL	090	PAS VENTURI	SCRUBBER	20 in wc				X	X				X																									RCRA**/MACT** AWFCO LIC 15 **/LIC(M)-18**. Ref: UMAP668LIC	1851/00	72	CH 1

UMCDF LIQUID INCINERATOR (LIC) #1 POLLUTION ABATEMENT SYSTEM (PAS) AND PAS FILTER SYSTEM (PFS)

UMCDF LIC 1 PAS/PFS — ALARM AND INTERLOCK MATRIX — **UMCDF LIC 1 PAS/PFS**

P&IDs: UM-1-D-527/1, UM-6-D-501, -502, -517/1, -523, -535, and -539; PLC: ICS-CONR-114; INTERLOCK: I-7

B8:010/

Bit	Description
17	F00 - SPARE
16	F01 - SPARE
15	F02 - SPARE
14	F03 - SPARE
13	F04 - S/D AGENT PUMPS
12	F05 - LOCKOUT SECONDARY BURNER (NOTE 1)
11	F06 - LOCKOUT PRIMARY BURNER (NOTE 1)
10	F07 - INHIBIT FUEL OIL PURGE OF AGENT LINE
07	F10 - S/D SEC COMB AIR BLOWER
06	F11 - S/D PRI COMB AIR BLOWER
05	F12 - SPARE
04	F13 - CLOSE DECON/PRW VALVE
03	F14 - STOP DECON FEED/SWITCH TO PRW
02	F15 - STOP AGENT FEED
01	F16 - S/D SEC BURNER
00	F17 - S/D PRI BURNER
	MALFUNCTION

B8:011/

Bit	Description
17	P17 - S/D PFS-COOL-113A/213A FAN B (NOTE 1)
16	P16 - S/D PFS-COOL-113A/213A FAN A (NOTE 1)
15	P15 - S/D PFS-COOL-113B/213B FAN B (NOTE 1)
14	P14 - S/D PFS-COOL-113B/213B FAN A (NOTE 1)
13	P13 - OPEN QUENCH EMERG. PRW (NOTE 1)
12	P12 - S/D MIST ELIM WATER RETURN PMP
11	P11 - BKUP BRINE PUMP ON (NOTE 1)
10	P10 - BKUP CLEAN LIQ PUMP ON (NOTE 1)
07	P07 - SPARE
06	P06 - S/D BRINE PUMPS
05	P05 - S/D CLEAN LIQUOR PUMPS
04	P04 - S/D 1ST & 2ND STAGE ID FAN
03	P03 - SPARE
02	P02 - BYPASS CARBON FILTER (NOTE 1)
01	P01 - S/D IST STAGE ID FAN
00	P00 - S/D 2ND STAGE ID FAN
	PREALARM

ITEM NUM	LIC 1 TAG NUMBER	DESCRIPTION	SET POINT	B8:010/ 17	16	15	14	13	12	11	10	07	06	05	04	03	02	01	00	B8:011/ 17	16	15	14	13	12	11	10	07	06	05	04	03	02	01	00		REMARKS	ALARM BIT B001:XX/XX	MASK WORD B8:XX	
34	24 PDALL 090A	PAS VENTURI SCRUBBER	**20 in wc**			X	X					X																									MACT AWFCO LIC(M)-**19**. ROHA. Ref. UMSF973LIC.	**1852/00**	**44**	CH 1
35	24 AAH 091	PAS QUENCH BRINE pH	9.5 pH																																	X		1850/12	NA	
36	24 AAL 091	PAS QUENCH BRINE pH	7.5 pH																																	X		1850/10	NA	
37	24 AALL 091	PAS QUENCH BRINE pH	7.0 pH			X	X					X																									Alarm is at TOCDF and is in Jan 2000 ANCDF code, but is not shown on UM-6-D-501.	1851/04	76	CH 1
38	24 AALL 091A/**B**	PAS QUENCH BRINE pH	**5.5 pH**			X	X					X																									MACT AWFCO LIC(M)-**38**. ROHA. Ref. UMSF973LIC. Alarm active only when 24-AE-091A/**B** is online.	**1852/06**	**44**	CH 1
39	24 AIT 091A/B	PAS QUENCH BRINE pH	Calibrate			X	X					X																									Shutdown requires that AIT-091A and -091B are in calibrate mode. Alarm from Jan 2000 ANCDF code. See FAWB Note B-16.	1864/13 1865/13	250	CH 1
40	24 XA 094	PAS-PUMP-111 QUENCH BRINE	MALF	X																						X											Switchover to secondary pump on malfunction alarm when PAS-PUMP-111 is selected as primary.	1860/11	NA	
41	24 FISL 098	PAS-PUMP-111 SEAL WATER	0.15 gpm																							**X**											**Time** delay. S/D PAS-PUMP-111 if selected as primary, which will cause 24-XA-094 to alarm. SP from instrument data sheet.	1820/00	NA	CH 1
42	24 LSLLL 099	PAS SCRUBBER SCRUBBER SUMP	44 in		X	X	X					X																	X								**Time** delay. Input to PAS NORMAL relay (see FAWB Note B-19).	1620/00	70	CH 1
43	24 PAL 100	BRINE PUMP DISCHARGE	80 psig																							X											SP per DSIC. Switchover to secondary pump on low pressure alarm when primary is running.	1850/00	NA	
44	24 PALL 100	BRINE PUMP DISCHARGE	40 psig				X	X				X																										1851/12	242	
45	24 XA 102	PAS-PUMP-112 QUENCH BRINE	MALF	X																						X											Switchover to secondary pump on malfunction alarm when PAS-PUMP-112 is selected as primary.	1862/11	NA	
46	24 FISL 106	PAS-PUMP-112 SEAL WATER	0.15 gpm																							**X**											**Time** delay. S/D PAS-PUMP-112 if selected as primary, which will cause 24-XA-102 to alarm. SP from instrument data sheet.	1820/02	NA	CH 1
47	24 PDAH 108	PAS SCRUBBER PACKED BED	6 in wc																																	X		1651/10	NA	
48	**24 PDAL 108A**	**PAS SCRUBBER PACKED BED**	**1.5 in wc**																																	**X**	**Prealarm.**	**1621/16**	**NA**	CH 1
49	24 PDAL**L** 108A	PAS SCRUBBER PACKED BED	1 in wc			X	X					X																									MACT AWFCO LIC(M)-**39**. ROHA. Ref. UMUF866LIC. **NOTE 7.**	**1621/14**	**230**	CH 1
50	24 PDAH 111	BRINE TO QUENCH FILTER	10.0 psid																																	X		1450/06	NA	

UMCDF LIQUID INCINERATOR (LIC) #1 POLLUTION ABATEMENT SYSTEM (PAS) AND PAS FILTER SYSTEM (PFS)

UMCDF LIC 1 PAS/PFS — ALARM AND INTERLOCK MATRIX — **UMCDF LIC 1 PAS/PFS**

P&IDs: UM-1-D-527/1, UM-6-D-501, -502, -517/1, -523, -535, and -539; PLC: ICS-CONR-114; INTERLOCK: I-7

CH 4

B8:010/

17	16	15	14	13	12	11	10	07	06	05	04	03	02	01	00
F00 - SPARE	F01 - SPARE	F02 - SPARE	F03 - SPARE	F04 - S/D AGENT PUMPS	F05 - LOCKOUT SECONDARY BURNER (NOTE 1)	F06 - LOCKOUT PRIMARY BURNER (NOTE 1)	F07 - INHIBIT FUEL OIL PURGE OF AGENT LINE	F10 - S/D SEC COMB AIR BLOWER	F11 - S/D PRI COMB AIR BLOWER	F12 - SPARE	F13 - CLOSE DECON/PRW VALVE	F14 - STOP DECON FEED/SWITCH TO PRW	F15 - STOP AGENT FEED	F16 - S/D SEC BURNER	F17 - S/D PRI BURNER

B8:011/

17	16	15	14	13	12	11	10	07	06	05	04	03	02	01	00	X	
P17 - S/D PFS-COOL-113A/213A FAN B (NOTE 1)	P16 - S/D PFS-COOL-113A/213A FAN A (NOTE 1)	P15 - S/D PFS-COOL-113B/213B FAN B (NOTE 1)	P14 - S/D PFS-COOL-113B/213B FAN A (NOTE 1)	P13 - OPEN QUENCH EMERG. PRW (NOTE 1)	P12 - S/D MIST ELIM WATER RETURN PMP	P11 - BKUP BRINE PUMP ON (NOTE 1)	P10 - BKUP CLEAN LIQ PUMP ON (NOTE 1)	P07 - SPARE	P06 - S/D BRINE PUMPS	P05 - S/D CLEAN LIQUOR PUMPS	P04 - S/D 1ST & 2ND STAGE ID FAN	P03 - SPARE	P02 - BYPASS CARBON FILTER (NOTE 1)	P01 - S/D IST STAGE ID FAN	P00 - S/D 2ND STAGE ID FAN	MALFUNCTION	PREALARM

ITEM NUM	LIC 1 TAG NUMBER			DESCRIPTION		SET POINT	17	16	15	14	13	12	11	10	07	06	05	04	03	02	01	00	17	16	15	14	13	12	11	10	07	06	05	04	03	02	01	00	X	REMARKS	ALARM BIT B001:XX/XX	MASK WORD B8:XX	
51	24	FAL	112	CLEAN LIQUOR	TO SCRUBBER	SP-10%																																	X	SP = flow setpoint entered in controller by operator. Design flow is 778 gpm.	1650/10	NA	
52	24	FALL	112	CLEAN LIQUOR	TO SCRUBBER	700 gpm			X	X				X																										RCRA/**MACT** AWFCO LIC 16 **/LIC(M)-20**. Ref. UMSF973LIC.	1650/06	146	CH 1
53	24	FALL	112A	CLEAN LIQUOR	TO SCRUBBER	**700 gpm**			X	X				X																										MACT AWFCO LIC(M)-**21**. ROHA. Ref. UMUF866LIC.	**1652/02**	**44**	CH 1
54	24	PSL	112	PAS SCRUBBER	CLEAN LIQUOR	3.0 psig																																	X	SP from Parson's I&T process engineering, Uma&iPSL112.txt, 01/18/00.	1621/04	NA	
55	24	PSLL	112	PAS SCRUBBER	CLEAN LIQUOR	1.7 psig																											**X**							SP from Parson's I&T process engineering, Uma&iPSL112.txt, 01/18/00.	1621/06	**46**	CH 1
56	24	LAL	113	PAS SCRUBBER	CLEAN LIQ SUMP	24 in			**X**	**X**				**X**																			**X**						X	SP from P&ID (14 ft 0 in. minus 12 ft 0 in. offset). SP is 30 in. above bottom of chimney tray well point. Alarm response per Oct 2000 ANCDF PAS/PFS mtg.	1650/12	100	CH 1
57	24	LSHHH	114	PAS SCRUBBER	BRINE SUMP	92 in	X	X	X	X				X														X												**Time** delay. Input to PAS NORMAL relay (see FAWB Note B-19). See NOTE 3 for additional interlocks.	1620/02	74	CH 1
58	24	LAH	115	PAS SCRUBBER	BRINE SUMP	80 in																																	X	Prealarm per ANCDF Oct 2000 PAS/PFS mtg. **Input to PAS NORMAL.**	1650/16	**NA**	CH 1
59	24	LAL	115	PAS SCRUBBER	BRINE SUMP	56 in																																	X	Prealarm per ANCDF Oct 2000 PAS/PFS mtg. **Input to PAS NORMAL.**	1650/14	**NA**	CH 1
60	24	LSHH	115	PAS SCRUBBER	BRINE SUMP	86 in			X	X				X																										RCRA AWFCO LIC 25. Measured from bottom tangent line. Ref. UMAP668LIC. Open 24-DV-083 (Deenergize 24-LY-083).	1621/10	**220**	CH 1
61	24	LSLL	115	PAS SCRUBBER	BRINE SUMP	50 in			X	X				X																										RCRA AWFCO LIC 29. Measured from bottom tangent. Ref. UMAP668LIC. Close 24-DV-083 (24-LY-083 energized and drive 24-DY-083 to close).	1621/12	**222**	CH 1
62	24	AAH	116	PAS SCRUBBER	CLEAN LIQUOR pH	9.5 pH																																	X		1651/02	NA	
63	24	AAL	116**A/B**	PAS SCRUBBER	CLEAN LIQUOR pH	**7.7 pH**																																	X		**1651/00**	NA	CH 1
64	24	AALL	116	PAS SCRUBBER	CLEAN LIQUOR pH	7.5 pH			X	X				X																										RCRA/**MACT** AWFCO LIC 20 **/LIC(M)-22**. Ref. UMSF973LIC. See FAWB Note B-16.	**1652/00**	**76**	CH 1

UMCDF LIQUID INCINERATOR (LIC) #1 POLLUTION ABATEMENT SYSTEM (PAS) AND PAS FILTER SYSTEM (PFS)

UMCDF LIC 1 PAS/PFS — ALARM AND INTERLOCK MATRIX — **UMCDF LIC 1 PAS/PFS**

P&IDs: UM-1-D-527/1, UM-6-D-501, -502, -517/1, -523, -535, and -539; PLC: ICS-CONR-114; INTERLOCK: I-7

CH 4

B8:010/

F00 - SPARE
F01 - SPARE
F02 - SPARE
F03 - SPARE
F04 - S/D AGENT PUMPS
F05 - LOCKOUT SECONDARY BURNER (NOTE 1)
F06 - LOCKOUT PRIMARY BURNER (NOTE 1)
F07 - INHIBIT FUEL OIL PURGE OF AGENT LINE
F10 - S/D SEC COMB AIR BLOWER
F11 - S/D PRI COMB AIR BLOWER
F12 - SPARE
F13 - CLOSE DECON/PRW VALVE
F14 - STOP DECON FEED/SWITCH TO PRW
F15 - STOP AGENT FEED
F16 - S/D SEC BURNER
F17 - S/D PRI BURNER
MALFUNCTION

B8:011/

P17 - S/D PFS-COOL-113A/213A FAN B (NOTE 1)
P16 - S/D PFS-COOL-113A/213A FAN A (NOTE 1)
P15 - S/D PFS-COOL-113B/213B FAN B (NOTE 1)
P14 - S/D PFS-COOL-113B/213B FAN A (NOTE 1)
P13 - OPEN QUENCH EMERG. PRW (NOTE 1)
P12 - S/D MIST ELIM WATER RETURN PMP
P11 - BKUP BRINE PUMP ON (NOTE 1)
P10 - BKUP CLEAN LIQ PUMP ON (NOTE 1)
P07 - SPARE
P06 - S/D BRINE PUMPS
P05 - S/D CLEAN LIQUOR PUMPS
P04 - S/D 1ST & 2ND STAGE ID FAN
P03 - SPARE
P02 - BYPASS CARBON FILTER (NOTE 1)
P01 - S/D IST STAGE ID FAN
P00 - S/D 2ND STAGE ID FAN
PREALARM

ITEM NUM	LIC 1 TAG NUMBER			DESCRIPTION		SET POINT	17	16	15	14	13	12	11	10	07	06	05	04	03	02	01	00	17	16	15	14	13	12	11	10	07	06	05	04	03	02	01	00	PREALARM	REMARKS	ALARM BIT B001:XX/XX	MASK WORD B8:XX	
65	24	AALL	116A/**B**	PAS SCRUBBER	CLEAN LIQUOR pH	**7.5 pH**			X	X					X																									MACT AWFCO LIC(M)-**23**. ROHA. Ref. UMSF973LIC. Alarm active only when 24-AE-116A/**B** is online. See FAWB Note B-16.	**1652/04**	**44**	CH 1
66	24	DAH	117	CLEAN LIQUOR	DENSITY	**1.03 sg**																																	X		1651/04	NA	CH 1
67	24	DAHH	117	CLEAN LIQUOR	DENSITY	1.25 sg																																	**X**		1651/12	NA	CH 1
68	24	DAHH	117A	CLEAN LIQUOR	DENSITY	1.04 sg			X	X					X																									MACT AWFCO LIC(M)-**40**. Based on 12-hr rolling avg. Ref. UMSF973LIC.	**1652/06**	**44**	CH 1
69	24	LAH	132	PAS QUENCH	SUMP	2.0 in																																	X	SP from P&ID.	1450/04	NA	
70	24	LAHH	132	PAS QUENCH	SUMP	**6.0 in**	X	X	X	X					X																									SP from P&ID. Shuts off brine spray to quench tower and PRW makeup to quench brine. Input to PAS NORMAL relay.	1450/02	80	CH 1
71	24	LAH	143	PAS MIST ELIM.	SUMP	18 in																																	**X**	SP per UM-6-D-502. Start PAS-PUMP-136 (see FAWB Note B-17).	0650/02	NA	CH 1
72	24	LAHH	143	PAS MIST ELIM.	SUMP	20 in																																		SP per UM-6-D-502. **Alarm.**	0650/10	NA	CH 1
73	24	LAL	143	PAS MIST ELIM.	SUMP	10 in																																	X	SP per UM-6-D-502.	0650/00	NA	
74	24	LSLL	144	PAS MIST ELIM.	SUMP	8 in																						X												**Time** delay. SP per UM-6-D-502. Alarm active when 24-HS-143 selected to LIC 1 mist elim. Hardwired S/D of pump needs to be disabled when 24-HS-143 is aligned to the spare. (Note 24-HS-143 is not shown on P&ID).	0620/00	82	CH 1
75	24	LSHH	146	PAS MIST ELIM.	SUMP	66 in																																		**Time** delay. SP per UM-6-D-502. Input to PAS NORMAL relay.	0620/02	NA	CH 1
76	24	PDAH	147	PAS MIST ELIM.	DP AT CANDLES	**18 in wc**																																	X		0650/04	NA	CH 1
77	24	PDAHH	147	PAS MIST ELIM.	DP AT CANDLES	20 in wc			X	X					X																									**RCRA/MACT AWFCO LIC-38 /LIC(M)-41.**	0650/12	144	CH 1
78	24	LAH	161	SPARE MIST ELIM.	SUMP	18 in																																	**X**	SP per UM-6-D-502 for LAH-143. Start PAS-PUMP-136 (see FAWB Note B-17). Alarm not shown on UM-6-D-502.	0850/02	NA	CH 1
79	24	LAHH	161	SPARE MIST ELIM.	SUMP	20 in																																		SP per UM-6-D-502 for LAHH-143. Alarm not shown on UM-6-D-502.	0850/04	NA	
80	24	LAL	161	SPARE MIST ELIM.	SUMP	10 in																																	X	SP per UM-6-D-502 for LAL-143. Alarm not shown on UM-6-D-502.	0850/00	NA	

UMCDF LIQUID INCINERATOR (LIC) #1 POLLUTION ABATEMENT SYSTEM (PAS) AND PAS FILTER SYSTEM (PFS)

UMCDF LIC 1 PAS/PFS — ALARM AND INTERLOCK MATRIX — **UMCDF LIC 1 PAS/PFS**

P&IDs: UM-1-D-527/1, UM-6-D-501, -502, -517/1, -523, -535, and -539; PLC: ICS-CONR-114; INTERLOCK: I-7

CH 4

B8:010/

17	16	15	14	13	12	11	10	07	06	05	04	03	02	01	00
F00 - SPARE	F01 - SPARE	F02 - SPARE	F03 - SPARE	F04 - S/D AGENT PUMPS	F05 - LOCKOUT SECONDARY BURNER (NOTE 1)	F06 - LOCKOUT PRIMARY BURNER (NOTE 1)	F07 - INHIBIT FUEL OIL PURGE OF AGENT LINE	F10 - S/D SEC COMB AIR BLOWER	F11 - S/D PRI COMB AIR BLOWER	F12 - SPARE	F13 - CLOSE DECON/PRW VALVE	F14 - STOP DECON FEED/SWITCH TO PRW	F15 - STOP AGENT FEED	F16 - S/D SEC BURNER	F17 - S/D PRI BURNER

B8:011/

17	16	15	14	13	12	11	10	07	06	05	04	03	02	01	00
P17 - S/D PFS-COOL-113A/213A FAN B (NOTE 1)	P16 - S/D PFS-COOL-113A/213A FAN A (NOTE 1)	P15 - S/D PFS-COOL-113B/213B FAN B (NOTE 1)	P14 - S/D PFS-COOL-113B/213B FAN A (NOTE 1)	P13 - OPEN QUENCH EMERG. PRW (NOTE 1)	P12 - S/D MIST ELIM WATER RETURN PMP	P11 - BKUP BRINE PUMP ON (NOTE 1)	P10 - BKUP CLEAN LIQ PUMP ON (NOTE 1)	P07 - SPARE	P06 - S/D BRINE PUMPS	P05 - S/D CLEAN LIQUOR PUMPS	P04 - S/D 1ST & 2ND STAGE ID FAN	P03 - SPARE	P02 - BYPASS CARBON FILTER (NOTE 1)	P01 - S/D IST STAGE ID FAN	P00 - S/D 2ND STAGE ID FAN

ITEM NUM	LIC 1 TAG NUMBER	DESCRIPTION	SET POINT	MALFUNCTION	17	16	15	14	13	12	11	10	07	06	05	04	03	02	01	00	17	16	15	14	13	12	11	10	07	06	05	04	03	02	01	00	PREALARM	REMARKS	ALARM BIT B001:XX/XX	MASK WORD B8:XX	
81	24 LSLL 162	SPARE MIST ELIM. SUMP	8 in																							X												**Time** delay. SP per UM-6-D-502. Alarm active when 24-HS-143 selected to spare mist elim. Hardwired S/D of pump needs to be disabled when 24-HS-143 is aligned to the LIC 1. (Note 24-HS-143 is not shown on P&ID).	0820/00	86	CH 1
82	24 LSHH 163	SPARE MIST ELIM. SUMP	66 in																																			**Time** delay. SP per UM-6-D-502. Input to PAS NORMAL relay.	0820/02	NA	CH 1
83	24 PDAH 164	SPARE MIST ELIM. CANDLES DP	15 in wc																																		X		0850/06	NA	
84	24 PDAHH 164	SPARE MIST ELIM. CANDLES DP	20 in wc				X	X				X																										**RCRA/MACT AWFCO LIC-38 /LIC(M)-41.**	0850/10	148	CH 1
85	24 FAH 198	PAS-SCRB-103 CAUSTIC ADDITION	3.4 gpm																																		X	SP per RFI S-ALL-232. Note: AN modified SP	1653/00	NA	
86	24 FAL 198	PAS-SCRB-103 CAUSTIC ADDITION	0.1 gpm																																		X	SP per RFI S-ALL-232. Note: AN modified SP	1652/16	NA	
87	**24 ADH 210**	**O2 DIFFERENTIAL ALARM**	**+/- 1% O2**																																		**X**	**Differential alarm for O2 based on moisture corrected value.**	**1255/14**	**NA**	CH 1
88	24 AAH 210A	LIC FLUE GAS TO STACK 02	12% O2																																		X	Corrected to dry basis. See NOTE 2.	**1254/02**	NA	CH 1
89	24 AAHH 210A	LIC FLUE GAS TO STACK 02	13% O2				X	X				X																										RCRA AWFCO LIC-26. Corrected to dry basis. See NOTE 2.	**1254/00**	**34**	CH 1
90	24 AAL 210A	LIC FLUE GAS TO STACK 02	6% O2																																		X	Corrected to dry basis. See NOTE 2.	**1254/04**	NA	CH 1
91	24 AALL 210A	LIC FLUE GAS TO STACK 02	5% O2				X	X				X																										RCRA**/MACT** AWFCO LIC-27 **/LIC(M)-29**. Corrected to dry basis. See NOTE 2.	**1254/06**	**34**	CH 1
92	24 XS 210A	LIC FLUE GAS **O2 ANALYZER MALF.**	MALF	X			X	X				X																										Stop feed on malf. alarm only if 24-AIT-210B is also in malf. or is in "calibrate" mode. **Activation has 5 sec delay.** See NOTE 2.	**1224/00**	36	CH 1
93	24 HS 210A/210B	BOTH LIC 1 PAS O2 ANALYZERS IN CAL	In Calib				X	X				X																										**Stop Feed with both analyzers in "calibrate". See NOTE 8.**			CH 1
94	24 AAH 210B	LIC FLUE GAS TO STACK 02	12% O2																																		X	Corrected to dry basis. See NOTE 2.	**1254/12**	NA	CH 1
95	24 AAHH 210B	LIC FLUE GAS TO STACK 02	13% O2				X	X				X																										RCRA AWFCO LIC-26. Corrected to dry basis. See NOTE 2.	**1254/10**	**34**	CH 1
96	24 AAL 210B	LIC FLUE GAS TO STACK 02	6% O2																																		X	Corrected to dry basis. See NOTE 2.	**1254/14**	NA	CH 1
97	24 AALL 210B	LIC FLUE GAS TO STACK 02	5% O2				X	X				X																										RCRA**/MACT** AWFCO LIC-27 **/LIC(M)-29**. Corrected to dry basis. See NOTE 2.	**1254/16**	**34**	CH 1

UMCDF LIQUID INCINERATOR (LIC) #1 POLLUTION ABATEMENT SYSTEM (PAS) AND PAS FILTER SYSTEM (PFS)

UMCDF LIC 1 PAS/PFS — ALARM AND INTERLOCK MATRIX — **UMCDF LIC 1 PAS/PFS**

P&IDs: UM-1-D-527/1, UM-6-D-501, -502, -517/1, -523, -535, and -539; PLC: ICS-CONR-114; INTERLOCK: I-7

B8:010/

F00 - SPARE
F01 - SPARE
F02 - SPARE
F03 - SPARE
F04 - S/D AGENT PUMPS
F05 - LOCKOUT SECONDARY BURNER (NOTE 1)
F06 - LOCKOUT PRIMARY BURNER (NOTE 1)
F07 - INHIBIT FUEL OIL PURGE OF AGENT LINE
F10 - S/D SEC COMB AIR BLOWER
F11 - S/D PRI COMB AIR BLOWER
F12 - SPARE
F13 - CLOSE DECON/PRW VALVE
F14 - STOP DECON FEED/SWITCH TO PRW
F15 - STOP AGENT FEED
F16 - S/D SEC BURNER
F17 - S/D PRI BURNER
MALFUNCTION

B8:011/

P17 - S/D PFS-COOL-113A/213A FAN B (NOTE 1)
P16 - S/D PFS-COOL-113A/213A FAN A (NOTE 1)
P15 - S/D PFS-COOL-113B/213B FAN B (NOTE 1)
P14 - S/D PFS-COOL-113B/213B FAN A (NOTE 1)
P13 - OPEN QUENCH EMERG. PRW (NOTE 1)
P12 - S/D MIST ELIM WATER RETURN PMP
P11 - BKUP BRINE PUMP ON (NOTE 1)
P10 - BKUP CLEAN LIQ PUMP ON (NOTE 1)
P07 - SPARE
P06 - S/D BRINE PUMPS
P05 - S/D CLEAN LIQUOR PUMPS
P04 - S/D 1ST & 2ND STAGE ID FAN
P03 - SPARE
P02 - BYPASS CARBON FILTER (NOTE 1)
P01 - S/D IST STAGE ID FAN
P00 - S/D 2ND STAGE ID FAN
PREALARM

ITEM NUM	LIC 1 TAG NUMBER			DESCRIPTION		SET POINT	17	16	15	14	13	12	11	10	07	06	05	04	03	02	01	00	17	16	15	14	13	12	11	10	07	06	05	04	03	02	01	00	PREALARM	REMARKS	ALARM BIT B001:XX/XX	MASK WORD B8:XX	
98	24	XS	210B	LIC FLUE GAS **O2 ANALYZER MALF.**		MALF	X			X	X				X																									Stop feed on malf. alarm only if 24-AIT-210A is also in malf. or is in "calibrate" mode. **Activation has 5 sec delay.** See NOTE 2.	**1224/02**	36	CH 1
99	24	TAH	299	CLEAN LIQUOR	TO SCRUBBER	128°F																																	X	SP per RFI S-ALL-232.	1652/12	NA	
100	24	TAHH	299	CLEAN LIQUOR	TO SCRUBBER	143°F				X	X				X																									SP & response per RFI S-ALL-232.	1652/10	**226**	CH 1
101	24	TAL	299	CLEAN LIQUOR	TO SCRUBBER	100°F																																	X	SP per RFI S-ALL-232.	1652/14	NA	
102	24	XA	320	BRINE/CLEAN LIQ. DENSITY		MALF	X																																	Alarm for MALF signal from 24-XS-117 or 24-XS-083.	**1621/00**	NA	CH 1
103	24	IAH	388	ID FAN	2ND STAGE MTR	**299 amp**				X	X				X																									**Time** delay on startup. SP per **UMCDF**.	1250/02	96	CH 1
104	24	FSL	391	PAS QUENCH	PROCESS WATER	10 gpm																																		**Time** delay. SP from instrument data sheet. Active only when 24-TV-089 is open.	1420/02	NA	CH 1
105	24	TSHHH	396	PAS QUENCH TWR OVERHEAD TEMP		250°F		X	X	X	X				X																									SP from UMAC817ICS. Input to PAS NORMAL relay. See FAWB Note B-7.	1420/10	98	
106	24	TAH	397	PAS QUENCH TWR OVERHEAD TEMP		200°F																																	X	(see FAWB Note B-7)	1450/10	NA	
107	24	FSL	398	PAS SCRUBBER	PROCESS WATER	20 gpm																																		**Time** delay. SP from instrument data sheet. Active only when 24-XV-092 is energized.	1620/10	NA	CH 1
108	24	LSLL	411	PAS SCRUBBER CLEAN LIQ SUMP		3 in				X	X				X																		X							**Time** delay. SP from P&ID (14 ft 0 in. minus 12 ft 0 in. offset). SP is 9 in. above bottom of chimney tray well point. Alarm response per Oct 2000 ANCDF PAS/PFS mtg.	1620/12	100	CH 1
109	24	FSL	438	PAS SCRUBBER	PURGE PERMISS	1200 scfm																																	X	**Time** delay. SP from instrument data sheet.	1620/14	NA	CH 1
110	24	FSLL	438	PAS SCRUBBER	NFPA BURN S/D	650 scfm				X	X				X	X	X																							**Time** delay for stop feed. SP from instrument data sheet. BMS 3-P running interlock.	1620/16	88	CH 1
111	24	TSH	450A/B	1st STAGE ID FAN BEARING TEMP		**156°F**																																	**X**	SP from vendor info.	**1222/16**	**NA**	CH 1
112	24	TSHH	450A/B	1st STAGE ID FAN BEARING TEMP		**198°F**				**X**	**X**				**X**																					X				SP from vendor info. UM-6-D-517 Note 14 specifies S/D 1st stage, except when running in emergency mode.	1221/10	122	CH 1
113	24	TSH	451A/B	2nd STAGE ID FAN BEARING TEMP		**156°F**																																	**X**	SP from vendor info.	**1223/00**	**NA**	CH 1
114	24	TSHH	451A/B	2nd STAGE ID FAN BEARING TEMP		**198°F**				**X**	**X**				**X**																							X		SP from vendor info. UM-6-D-517 Note 14 specifies S/D 2nd stage, except when running in emergency mode.	1221/12	138	CH 1
115	24	PSH	505	ID FAN	1ST STG SUCTN	**- 80 in wc**																																	X	SP from **UMCDF.**	1223/02	NA	CH 1
116	24	PDAH	583	PAS SCRUBBER	CLEAN LIQ FIL	10 psid																																	X		1650/02	NA	

UMCDF LIQUID INCINERATOR (LIC) #1 POLLUTION ABATEMENT SYSTEM (PAS) AND PAS FILTER SYSTEM (PFS)

UMCDF LIC 1 PAS/PFS — ALARM AND INTERLOCK MATRIX — **UMCDF LIC 1 PAS/PFS**

P&IDs: UM-1-D-527/1, UM-6-D-501, -502, -517/1, -523, -535, and -539; PLC: ICS-CONR-114; INTERLOCK: I-7

B8:010/

F00 - SPARE
F01 - SPARE
F02 - SPARE
F03 - SPARE
F04 - S/D AGENT PUMPS
F05 - LOCKOUT SECONDARY BURNER (NOTE 1)
F06 - LOCKOUT PRIMARY BURNER (NOTE 1)
F07 - INHIBIT FUEL OIL PURGE OF AGENT LINE
F10 - S/D SEC COMB AIR BLOWER
F11 - S/D PRI COMB AIR BLOWER
F12 - SPARE
F13 - CLOSE DECON/PRW VALVE
F14 - STOP DECON FEED/SWITCH TO PRW
F15 - STOP AGENT FEED
F16 - S/D SEC BURNER
F17 - S/D PRI BURNER
MALFUNCTION

B8:011/

P17 - S/D PFS-COOL-113A/213A FAN B (NOTE 1)
P16 - S/D PFS-COOL-113A/213A FAN A (NOTE 1)
P15 - S/D PFS-COOL-113B/213B FAN B (NOTE 1)
P14 - S/D PFS-COOL-113B/213B FAN A (NOTE 1)
P13 - OPEN QUENCH EMERG. PRW (NOTE 1)
P12 - S/D MIST ELIM WATER RETURN PMP
P11 - BKUP BRINE PUMP ON (NOTE 1)
P10 - BKUP CLEAN LIQ PUMP ON (NOTE 1)
P07 - SPARE
P06 - S/D BRINE PUMPS
P05 - S/D CLEAN LIQUOR PUMPS
P04 - S/D 1ST & 2ND STAGE ID FAN
P03 - SPARE
P02 - BYPASS CARBON FILTER (NOTE 1)
P01 - S/D IST STAGE ID FAN
P00 - S/D 2ND STAGE ID FAN
PREALARM

ITEM NUM	LIC 1 TAG NUMBER	DESCRIPTION	SET POINT	17	16	15	14	13	12	11	10	07	06	05	04	03	02	01	00	17	16	15	14	13	12	11	10	07	06	05	04	03	02	01	00	PREALARM	REMARKS	ALARM BIT B001:XX/XX	MASK WORD B8:XX	
117	24 PDAH 618	PAS-PUMP-131 DISCH FILTER	5.0 psid																																	X		0650/06	NA	
118	24 XA 777	1st STAGE ID FAN TROUBLE	Trouble				X	X				X																						X			Alarm response per RFI C-ANCDF-002. Trouble alarm initiated by ASD motor thermal overload which stops the motor.	1223/04	**118**	CH 1
119	24 SAH 777A	1st STAGE ID FAN SPEED	1800 rpm				X	X				X																									SP per RFI S-ALL-232.	1250/14	**112**	CH 1
120	24 TSH 980A-F	1st STAGE ID FAN WINDING TEMP	**300°F**																																	X	SP from vendor info. Alarm on high temp for any of 24-TSH-980A through F.	1220/10	**NA**	CH 1
121	24 TSHH 980A-F	1st STAGE ID FAN WINDING TEMP	**312°F**				**X**	**X**				**X**																						X			SP from vendor info. Alarm on high-high temp for any of 24-TSHH-980A through F. UM-6-D-517 Note 14 specifies S/D 1st stage, except when running in emergency mode.	1221/16	110	CH 1
122	24 IAH 981	ID FAN 1ST STAGE MTR	**229 amp**				X	X				X																									**30-sec** delay on startup. SP per **UMCDF**.	1250/04	112	CH 1
123	24 XAH 982	1st STAGE ID FAN VIBRATION	0.25 in/sec																																	X	See NOTE 5.	1251/00	**NA**	CH 1
124	24 XSHH 982	1st STAGE ID FAN VIBRATION	0.5 in/sec				**X**	**X**				**X**																						X			**Time** delay. S/D 1st stage, except when running in emergency mode. See NOTE 5.	1222/00	114	CH 1
125	24 XA 983	ID FAN 1ST STAGE MTR	MALF	X			X	X				X																						X			Start I-lock for 1st stage motor.	1261/11	118	
126	24 FISL 994	PAS MIST ELIM. WTR RTN PUMP	0.15 gpm																						X												**Time** delay. SP from instrument data sheet.	0620/12	NA	CH 1
127	114 TAH 207	PFS-COOL-113B CLN LIQ CLR	135°F																																	X	SP per RFI S-ALL-232.	3050/16	NA	
128	114 TAL 207	PFS-COOL-113B CLN LIQ CLR	100°F																			X	X														SP per RFI S-ALL-232. Instant alarm, 120-sec delay for cooler S/D (see FAWB Note B-20). S/D fan motors of respective cooling unit.	3050/14	NA	
129	114 XSH 208	PFS-COOL-113B FAN B VIBRATION	See NOTE 6																																	X	**Time** delay (vendor info shows additional hardwired startup time delay relay). S/D fan motor of respective cooling unit.	3020/06	NA	CH 1
130	114 XSHH 209	PFS-COOL-113B FAN B VIBRATION	See NOTE 6																			X															**Time** delay (vendor info shows additional hardwired startup time delay relay). S/D fan motor of respective cooling unit.	3020/16	NA	CH 1
131	114 XSH 210	PFS-COOL-113B FAN A VIBRATION	See NOTE 6																																	X	**Time** delay (vendor info shows additional hardwired startup time delay relay)	3020/04	NA	CH 1
132	114 XSHH 211	PFS-COOL-113B FAN A VIBRATION	See NOTE 6																				X														**Time** delay (vendor info shows additional hardwired startup time delay relay)	3020/14	NA	CH 1

UMCDF LIQUID INCINERATOR (LIC) #1 POLLUTION ABATEMENT SYSTEM (PAS) AND PAS FILTER SYSTEM (PFS)

UMCDF LIC 1 PAS/PFS — ALARM AND INTERLOCK MATRIX — **UMCDF LIC 1 PAS/PFS**

P&IDs: UM-1-D-527/1, UM-6-D-501, -502, -517/1, -523, -535, and -539; PLC: ICS-CONR-114; INTERLOCK: I-7

CH 4

B8:010/

F00 - SPARE
F01 - SPARE
F02 - SPARE
F03 - SPARE
F04 - S/D AGENT PUMPS
F05 - LOCKOUT SECONDARY BURNER (NOTE 1)
F06 - LOCKOUT PRIMARY BURNER (NOTE 1)
F07 - INHIBIT FUEL OIL PURGE OF AGENT LINE
F10 - S/D SEC COMB AIR BLOWER
F11 - S/D PRI COMB AIR BLOWER
F12 - SPARE
F13 - CLOSE DECON/PRW VALVE
F14 - STOP DECON FEED/SWITCH TO PRW
F15 - STOP AGENT FEED
F16 - S/D SEC BURNER
F17 - S/D PRI BURNER
MALFUNCTION

B8:011/

P17 - S/D PFS-COOL-113A/213A FAN B (NOTE 1)
P16 - S/D PFS-COOL-113A/213A FAN A (NOTE 1)
P15 - S/D PFS-COOL-113B/213B FAN B (NOTE 1)
P14 - S/D PFS-COOL-113B/213B FAN A (NOTE 1)
P13 - OPEN QUENCH EMERG. PRW (NOTE 1)
P12 - S/D MIST ELIM WATER RETURN PMP
P11 - BKUP BRINE PUMP ON (NOTE 1)
P10 - BKUP CLEAN LIQ PUMP ON (NOTE 1)
P07 - SPARE
P06 - S/D BRINE PUMPS
P05 - S/D CLEAN LIQUOR PUMPS
P04 - S/D 1ST & 2ND STAGE ID FAN
P03 - SPARE
P02 - BYPASS CARBON FILTER (NOTE 1)
P01 - S/D IST STAGE ID FAN
P00 - S/D 2ND STAGE ID FAN
PREALARM

ITEM NUM	LIC 1 TAG NUMBER	DESCRIPTION	SET POINT	17	16	15	14	13	12	11	10	07	06	05	04	03	02	01	00	17	16	15	14	13	12	11	10	07	06	05	04	03	02	01	00	REMARKS	ALARM BIT B001:XX/XX	MASK WORD B8:XX	
133	114 SAH 212A	PFS-COOL-113B FAN B SPEED	**1790 rpm**																			X														SP per **UMCDF**. S/D fan motor of respective cooling unit.	3051/06	NA	CH 1
134	114 SAH 213A	PFS-COOL-113B FAN A SPEED	**1790 rpm**																				X													SP per **UMCDF**. S/D fan motor of respective cooling unit.	3051/04	NA	CH 1
135	114 XA 217	PFS-COOL-113B FAN B	TROUBLE																			X														On time delay. Alarm generated by XSHH-209 or VFD in fault lockout. VFD internally configured to stop motor (see RFI C-PBCDF-002).	3021/06	NA	
136	114 XA 219	PFS-COOL-113B FAN A	TROUBLE																				X													On time delay. Alarm generated by XSHH-211 or VFD in fault lockout. VFD internally configured to stop motor (see RFI C-PBCDF-002).	3021/04	NA	
137	114 XSH 224	PFS-COOL-113A FAN B VIBRATION	See NOTE 6																																X	**Time** delay (vendor info shows additional hardwired startup time delay relay)	3020/02	NA	CH 1
138	114 XSHH 225	PFS-COOL-113A FAN B VIBRATION	See NOTE 6																	X																**Time** delay (vendor info shows additional hardwired startup time delay relay). S/D fan motor of respective cooling unit.	3020/12	NA	CH 1
139	114 XSH 226	PFS-COOL-113A FAN A VIBRATION	See NOTE 6																																X	**Time** delay (vendor info shows additional hardwired startup time delay relay)	3020/00	NA	CH 1
140	114 XSHH 227	PFS-COOL-113A FAN A VIBRATION	See NOTE 6																		X															**Time** delay (vendor info shows additional hardwired startup time delay relay). S/D fan motor of respective cooling unit.	3020/10	NA	CH 1
141	114 SAH 228A	PFS-COOL-113A FAN B SPEED	**1790 rpm**																	X																SP per **UMCDF**. S/D fan motors of respective cooling unit.	3051/02	NA	CH 1
142	114 SAH 229A	PFS-COOL-113A FAN A SPEED	**1790 rpm**																		X															SP per **UMCDF**. S/D fan motors of respective cooling unit.	3051/00	NA	CH 1
143	114 XA 233	PFS-COOL-113A FAN B	TROUBLE																	X																On time delay. Alarm generated by XSHH-225 or VFD in fault lockout. VFD internally configured to stop motor (see RFI C-PBCDF-002).	3021/02	NA	
144	114 XA 235	PFS-COOL-113A FAN A	TROUBLE																		X															On time delay. Alarm generated by XSHH-227 or VFD in fault lockout. VFD internally configured to stop motor (see RFI C-PBCDF-002).	3021/00	NA	
145	114 TAH 240	PFS-COOL-113A CL LIQ CLR	135°F																																X	SP per RFI S-ALL-232.	3050/12	NA	

UMCDF LIQUID INCINERATOR (LIC) #1 POLLUTION ABATEMENT SYSTEM (PAS) AND PAS FILTER SYSTEM (PFS)

UMCDF LIC 1 PAS/PFS — ALARM AND INTERLOCK MATRIX — **UMCDF LIC 1 PAS/PFS**

P&IDs: UM-1-D-527/1, UM-6-D-501, -502, -517/1, -523, -535, and -539; PLC: ICS-CONR-114; INTERLOCK: I-7

B8:010/

17	16	15	14	13	12	11	10	07	06	05	04	03	02	01	00
F00 - SPARE	F01 - SPARE	F02 - SPARE	F03 - SPARE	F04 - S/D AGENT PUMPS	F05 - LOCKOUT SECONDARY BURNER (NOTE 1)	F06 - LOCKOUT PRIMARY BURNER (NOTE 1)	F07 - INHIBIT FUEL OIL PURGE OF AGENT LINE	F10 - S/D SEC COMB AIR BLOWER	F11 - S/D PRI COMB AIR BLOWER	F12 - SPARE	F13 - CLOSE DECON/PRW VALVE	F14 - STOP DECON FEED/SWITCH TO PRW	F15 - STOP AGENT FEED	F16 - S/D SEC BURNER	F17 - S/D PRI BURNER

B8:011/

17	16	15	14	13	12	11	10	07	06	05	04	03	02	01	00
P17 - S/D PFS-COOL-113A/213A FAN B (NOTE 1)	P16 - S/D PFS-COOL-113A/213A FAN A (NOTE 1)	P15 - S/D PFS-COOL-113B/213B FAN B (NOTE 1)	P14 - S/D PFS-COOL-113B/213B FAN A (NOTE 1)	P13 - OPEN QUENCH EMERG. PRW (NOTE 1)	P12 - S/D MIST ELIM WATER RETURN PMP	P11 - BKUP BRINE PUMP ON (NOTE 1)	P10 - BKUP CLEAN LIQ PUMP ON (NOTE 1)	P07 - SPARE	P06 - S/D BRINE PUMPS	P05 - S/D CLEAN LIQUOR PUMPS	P04 - S/D 1ST & 2ND STAGE ID FAN	P03 - SPARE	P02 - BYPASS CARBON FILTER (NOTE 1)	P01 - S/D IST STAGE ID FAN	P00 - S/D 2ND STAGE ID FAN

MALFUNCTION — PREALARM

ITEM NUM	LIC 1 TAG NUMBER			DESCRIPTION	SET POINT	MALFUNCTION	B8:010/ 17	16	15	14	13	12	11	10	07	06	05	04	03	02	01	00	B8:011/ 17	16	15	14	13	12	11	10	07	06	05	04	03	02	01	00	PREALARM	REMARKS	ALARM BIT B001:XX/XX	MASK WORD B8:XX	
146	114	TAL	240	PFS-COOL-113A CL LIQ CLR	100°F																		X	X																SP per RFI S-ALL-232. Instant alarm, 120-sec delay for cooler S/D (see FAWB Note B-20). S/D fan motors of respective cooling unit.	3050/10	NA	
147	114	PDAH	252	PFS-COOL-113B CLN LIQ CL	**19.9 psid**																																		X	SP per **UMCDF**.	3050/06	NA	CH 1
148	114	PDAL	252	PFS-COOL-113B CLN LIQ CLR	8 psid																																		X	SP per RFI S-ALL-232.	3050/04	NA	
149	114	PDAH	253	PFS-COOL-113A CLN LIQ CLR	20 psid																																		X	SP per RFI S-ALL-232.	3050/02	NA	
150	114	PDAL	253	PFS-COOL-113A CLN LIQ CLR	8 psid																																		X	SP per RFI S-ALL-232.	3050/00	NA	
151	114	XA	322	CLEAN LIQ PUMP A (PFS-PUMP-134)	MALF	X																								X										Switchover to secondary pump on malfunction alarm when PFS-PUMP-134 is selected as primary.	1660/11	NA	
152	114	FISL	324	CLEAN LIQ PUMP A SEAL WATER	0.15 gpm																									**X**										**Time** delay. S/D PFS-PUMP-134 if selected as primary, which will cause 114-XA-322 to alarm. SP from instrument data sheet.	1620/04	NA	CH 1
153	114	XA	328	CLEAN LIQ PUMP B (PFS-PUMP-135)	MALF	X																								X										Switchover to secondary pump on malfunction alarm when PFS-PUMP-135 is selected as primary.	1662/11	NA	
154	114	PAL	329	CLEAN LIQ PUMP DISCH PRESS	50 psig																									X										**70** sec delay after pump startup. 3 sec delay before S/D of primary pump. SP per DSIC. Response per Oct 2000 ANCDF PAS/PFS review mtg.	1650/00	**NA**	CH 1
155	114	PALL	329	CLEAN LIQ PUMP DISCH PRESS	**15 psig**				X	X				X									X	X	X	X							X							RCRA/**MACT** AWFCO LIC 21 **/LIC(M)-24**. Ref. UMAP668LIC. SP per **UMCDF**. Response per Oct 2000 ANCDF PAS/PFS review mtg.	1650/04	142	CH 1
156	114	FISL	331	CLEAN LIQ PUMP B SEAL WATER	0.15 gpm																									**X**										**Time** delay. S/D PFS-PUMP-135 if selected as primary, which will cause 114-XA-328 to alarm. SP from instrument data sheet.	1620/06	NA	CH 1
157	114	PDAH	454A	PFS-FILT-109 PREFILTER BANK	**1.2 in wc**																																		X	Prealarm per UMAP668LIC. SP per **UMCDF**.	3250/00	NA	CH 1
158	114	PDAHH	454A	PFS-FILT-109 PREFILTER BANK	**1.5 in wc**				X	X				X																										RCRA/**MACT** AWFCO LIC 33 **LIC(M)-34**. Ref. UMAP668LIC.	**3252/10**	**262**	CH 1
159	**114**	**PDAL**	**454A**	**PFS-FILT-109 PREFILTER BANK**	**0.2 in wc**																																		**X**		**3249/02**	**NA**	CH 1
160	**114**	**PDALL**	**454A**	**PFS-FILT-109 PREFILTER BANK**	**0 in wc**				**X**	**X**				**X**																										**MACT AWFCO LIC(M)-42.**	**3249/04**	**262**	CH 1
161	114	PDAH	454B	PFS-FILT-109 1st HEPA FILT BK	**2.7 in wc**																																		X	Prealarm per UMAP668LIC. SP per **UMCDF**.	3250/02	NA	CH 1
162	114	PDAHH	454B	PFS-FILT-109 1st HEPA FILT BK	**3.0 in wc**				X	X				X																										RCRA/**MACT** AWFCO LIC 34 **/LIC(M)-35**. Ref. UMAP668LIC.	**3249/06**	**262**	CH 1
163	**114**	**PDAL**	**454B**		**0.2 in wc**																																				**3249/10**	**NA**	CH 1

UMCDF LIQUID INCINERATOR (LIC) #1 POLLUTION ABATEMENT SYSTEM (PAS) AND PAS FILTER SYSTEM (PFS)

UMCDF LIC 1 PAS/PFS — ALARM AND INTERLOCK MATRIX — **UMCDF LIC 1 PAS/PFS**

P&IDs: UM-1-D-527/1, UM-6-D-501, -502, -517/1, -523, -535, and -539; PLC: ICS-CONR-114; INTERLOCK: I-7

CH 4

B8:010/

F00 - SPARE
F01 - SPARE
F02 - SPARE
F03 - SPARE
F04 - S/D AGENT PUMPS
F05 - LOCKOUT SECONDARY BURNER (NOTE 1)
F06 - LOCKOUT PRIMARY BURNER (NOTE 1)
F07 - INHIBIT FUEL OIL PURGE OF AGENT LINE
F10 - S/D SEC COMB AIR BLOWER
F11 - S/D PRI COMB AIR BLOWER
F12 - SPARE
F13 - CLOSE DECON/PRW VALVE
F14 - STOP DECON FEED/SWITCH TO PRW
F15 - STOP AGENT FEED
F16 - S/D SEC BURNER
F17 - S/D PRI BURNER
MALFUNCTION

B8:011/

P17 - S/D PFS-COOL-113A/213A FAN B (NOTE 1)
P16 - S/D PFS-COOL-113A/213A FAN A (NOTE 1)
P15 - S/D PFS-COOL-113B/213B FAN B (NOTE 1)
P14 - S/D PFS-COOL-113B/213B FAN A (NOTE 1)
P13 - OPEN QUENCH EMERG. PRW (NOTE 1)
P12 - S/D MIST ELIM WATER RETURN PMP
P11 - BKUP BRINE PUMP ON (NOTE 1)
P10 - BKUP CLEAN LIQ PUMP ON (NOTE 1)
P07 - SPARE
P06 - S/D BRINE PUMPS
P05 - S/D CLEAN LIQUOR PUMPS
P04 - S/D 1ST & 2ND STAGE ID FAN
P03 - SPARE
P02 - BYPASS CARBON FILTER (NOTE 1)
P01 - S/D IST STAGE ID FAN
P00 - S/D 2ND STAGE ID FAN
PREALARM

ITEM NUM	LIC 1 TAG NUMBER	DESCRIPTION	SET POINT	17	16	15	14	13	12	11	10	07	06	05	04	03	02	01	00	17	16	15	14	13	12	11	10	07	06	05	04	03	02	01	00		REMARKS	ALARM BIT B001:XX/XX	MASK WORD B8:XX	
164	**114 PDALL 454B**		**0 in wc**			**X**	**X**					**X**																									**MACT AWFCO LIC(M)-43.**	**3249/12**	**262**	CH 1
165	114 PDAH 454C	PFS-FILT-109 1st CARBON FILT	**1.2 in wc**																																	X	SP per **UMCDF**. Measures dP across primary bed in first carbon bank.	3250/04	NA	CH 1
166	114 PDAH 454D	PFS-FILT-109 2nd CARBON FILT	**1.2 in wc**																																	X	SP per **UMCDF**. Measures dP across primary bed in second carbon bank.	3250/06	NA	CH 1
167	114 PDAH 454E	PFS-FILT-109 3rd CARBON FILT	**1.2 in wc**																																	X	Carbon bank SP per **UMCDF**. Note: # of carbon banks changed after RFI release. Measures dP across primary bed in third carbon bank.	**3250/10**	NA	CH 1
168	114 PDAH 454F	PFS-FILT-109 4th CARBON FILT	**1.2 in wc**																																	X	Carbon bank SP per **UMCDF**. Note: # of carbon banks changed after RFI release. Measures dP across primary bed in fourth carbon bank.	**3250/12**	NA	CH 1
169	114 PDAH 454G	PFS-FILT-109 CARBON FILTER BANKS 1, 2, 3, 4 SECOND BED	**1.2 in wc**																																	X	Carbon bank SP per **UMCDF**. Note: # of carbon banks changed after RFI release. Measures dP across second bed of all 4 carbon banks.	**3251/02**	NA	CH 1
170	114 PDAH 454H	PFS-FILT-109 2nd HEPA FILT BK	**2.7 in wc**																																	X	Prealarm per UMUF889PFS. HEPA SP per **UMCDF**. Note: # of carbon banks & notation changed after RFI release.	**3251/04**	NA	CH 1
171	114 PDAHH 454H	PFS-FILT-109 2nd HEPA FILT BK	**3.0 in wc**			X	X					X																									RCRA/**MACT** AWFCO **LIC-34 /LIC(M)-35.** Ref: UMUF889PFS.	**3249/14**	**262**	CH 1
172	**114 PDAL 454H**		**0.2 in wc**																																			**3249/16**		CH 1
173	**114 PDALL 454H**		**0 in wc**			**X**	**X**					**X**																									**MACT AWFCO LIC(M)-43.**	**3249/00**	**262**	CH 1
174	114 PDAH 454I	PFS-FILT-109 OVERALL DP	16 in wc																																	X	Overall dP SP per RFI S-ALL-232. Note: # of carbon banks & notation changed after RFI release.	**3251/06**	NA	CH 1
175	114 TISH 460	PFS-BURN-101 EXH TEMP	168°F																																	X	On time delay. SP per DSIC.	3220/12	NA	
176	114 TSHH 460	PFS-BURN-101 EXH TEMP	176°F																																		On time delay. S/D PFS-BURN-101. SP per DSIC.	3220/14	NA	
177	114 **XA 483**	PFS-BURN-101 BURNER LOCKOUT	LOCKOUT			X	X					X																									Stop feed. (stop feed shown on UM-6-D-535). **Cannot find referenced RFI.**	**3221/00**	**250**	CH 1
178	114 **ZX** 483	PFS-BURN-101 BURNER TROUBLE	TROUBLE																																	X	Prealarm. **Not on P&ID. Found on I/O list.**	**3220/16**	NA	CH 1
179	114 TAH 518	PFS-BURN-101 EXH TEMP	172°F																																	X	SP per RFI S-ALL-241 R1. Instantaneous alarm.	3251/14	NA	
180	114 TAHH 518	PFS-BURN-101 EXH TEMP	170°F			X	X					X																									RCRA/**MACT** AWFCO LIC 35 **LIC(M)-36**. Rolling hourly average. Ref: UMAP668LIC.	**3251/00**	**44**	CH 1
181	114 TAL 518	PFS-BURN-101 EXH TEMP	135°F																																	X	SP per RFI S-ALL-241 R1. Instantaneous alarm.	3251/16	NA	

UMCDF LIQUID INCINERATOR (LIC) #1 POLLUTION ABATEMENT SYSTEM (PAS) AND PAS FILTER SYSTEM (PFS)

UMCDF LIC 1 PAS/PFS — ALARM AND INTERLOCK MATRIX — **UMCDF LIC 1 PAS/PFS**

P&IDs: UM-1-D-527/1, UM-6-D-501, -502, -517/1, -523, -535, and -539; PLC: ICS-CONR-114; INTERLOCK: I-7

CH 4

B8:010/

F00 - SPARE
F01 - SPARE
F02 - SPARE
F03 - SPARE
F04 - S/D AGENT PUMPS
F05 - LOCKOUT SECONDARY BURNER (NOTE 1)
F06 - LOCKOUT PRIMARY BURNER (NOTE 1)
F07 - INHIBIT FUEL OIL PURGE OF AGENT LINE
F10 - S/D SEC COMB AIR BLOWER
F11 - S/D PRI COMB AIR BLOWER
F12 - SPARE
F13 - CLOSE DECON/PRW VALVE
F14 - STOP DECON FEED/SWITCH TO PRW
F15 - STOP AGENT FEED
F16 - S/D SEC BURNER
F17 - S/D PRI BURNER
MALFUNCTION

B8:011/

P17 - S/D PFS-COOL-113A/213A FAN B (NOTE 1)
P16 - S/D PFS-COOL-113A/213A FAN A (NOTE 1)
P15 - S/D PFS-COOL-113B/213B FAN B (NOTE 1)
P14 - S/D PFS-COOL-113B/213B FAN A (NOTE 1)
P13 - OPEN QUENCH EMERG. PRW (NOTE 1)
P12 - S/D MIST ELIM WATER RETURN PMP
P11 - BKUP BRINE PUMP ON (NOTE 1)
P10 - BKUP CLEAN LIQ PUMP ON (NOTE 1)
P07 - SPARE
P06 - S/D BRINE PUMPS
P05 - S/D CLEAN LIQUOR PUMPS
P04 - S/D 1ST & 2ND STAGE ID FAN
P03 - SPARE
P02 - BYPASS CARBON FILTER (NOTE 1)
P01 - S/D IST STAGE ID FAN
P00 - S/D 2ND STAGE ID FAN
PREALARM

ITEM NUM	LIC 1 TAG NUMBER			DESCRIPTION	SET POINT	17	16	15	14	13	12	11	10	07	06	05	04	03	02	01	00	17	16	15	14	13	12	11	10	07	06	05	04	03	02	01	00	REMARKS	ALARM BIT B001:XX/XX	MASK WORD B8:XX	
182	114	TSHH	533	PFS-BURN-101 EXH TEMP	180°F			X	X					X																					X				RCRA/**MACT** AWFCO LIC 35 **/LIC(M)-36**. Bypass filters per Note 3 on UM-6-D-535. Ref: UMAP668LIC.	3220/10	**62**	CH 1
183	114	XA	534	PFS-BURN-101 EXH MOIST	> 10% DIFF																																X	Alarm when MIT-534A & B deviation exceeds 10% of upper range value.	3252/00	NA	
184	**114**	**MAH**	**534A**	**PFS-BURN-101 EXH REL HUM**	**60%RH**																																**X**	**Prealarm.**	**3251/10**	**NA**	CH 1
185	114	MSHH	534A	PFS-BURN-101 EXH REL HUM	80%RH			X	X					X																								RCRA/**MACT** AWFCO LIC 36 **/LIC(M)-37**. Instantaneous alarm. Ref: UMAP668LIC.	3220/00	**54**	CH 1
186	114	XS	534A	PFS-BURN-101 EXH MOIST	MALF	X		X	X					X																								On time delay. Remove instrument from ROHA calculation if it is the active unit.	3220/04	**54**	CH 1
187	114	MAHH	534**A/B**	PFS-BURN-101 EXH REL HUM	55%RH			X	X					X																								RCRA/**MACT** AWFCO LIC 36 **/LIC(M)-37**. Rolling hourly average. Ref: UMAP668LIC.	**3250/14**	**54**	CH 1
188	114	**MAH**	534B	PFS-BURN-101 EXH REL HUM	60%RH			**X**	**X**					**X**																							X	Instantaneous alarm. Ref: UMAP668LIC.	**3251/12**	NA	CH 1
189	**114**	**MSHH**	**534B**	**PFS-BURN-101 EXH REL HUM**	**80%RH**																																	**RCRA/MACT AWFCO LIC-36 /LIC(M)-37.**	**3220/02**	**54**	CH 1
190	114	XS	534B	PFS-BURN-101 EXH MOIST	MALF			X	X					X																								On time delay. Remove instrument from ROHA calculation if it is the active unit.	3220/06	TBD	
191	114	MAH	534**C**	PFS-BURN-101 EXH REL HUM	52%RH																																X	ROHA. Ref: UMAP668LIC.	**3250/16**	NA	CH 1
192	114	ZS	550B	PFS-FILT-109 BYPASS DAMPER	NOT CLOSED			X	X					X																								RCRA AWFCO LIC 37. Ref. UMAP668LIC. Agent feed permissive per UM-6-D-535 Note 4.	**3261/14**	**258**	CH 1
193	MON	ACAM	129 223 225	ACAMS COMMON STACK	SEE NOTE 4			X	X					X																								RCRA AWFCO LIC 18. Stop feed for DFS, LICs, MPF. DICO from ICS-CONR-112. Ref. UMAP668LIC.	B4:31/00	140	
194	MON	ACAM	129 223 225	ACAMS COMMON STACK	MALF	X		X	X					X																								RCRA AWFCO LIC 18. Stop feed for DFS, LICs, MPF. DICO from ICS-CONR-112. Ref. UMAP668LIC. See NOTE 4.	B4:31/00	140	
195	MON	ACAM	129 223 225	ACAMS COMMON STACK	OFFLINE			X	X					X																								RCRA AWFCO LIC 18. Stop feed for DFS, LICs, MPF. DICO from ICS-CONR-112. Ref. UMAP668LIC. See NOTE 4.	B4:31/00	140	
196	MON	ACAM	129 223 225	ACAMS COMMON STACK	NOT STAGGERED			X	X					X																								RCRA AWFCO LIC 18. Stop feed for DFS, LICs, MPF. DICO from ICS-CONR-112. Ref. UMAP668LIC. See NOTE 4.	B4:31/00	140	
197	MON	ACAM	163	ACAMS LIC PAS	SEE NOTE 4			X	X					X																								RCRA AWFCO LIC 17. Ref. UMAP668LIC.	2420/06	90	
198	MON	ACAM	163	ACAMS LIC PAS	MALF	X		X	X					X																								RCRA AWFCO LIC 17. Ref. UMAP668LIC. See NOTE 4.	2420/06	90	

UMCDF LIQUID INCINERATOR (LIC) #1 POLLUTION ABATEMENT SYSTEM (PAS) AND PAS FILTER SYSTEM (PFS)

CH 4

UMCDF LIC 1 PAS/PFS — ALARM AND INTERLOCK MATRIX — **UMCDF LIC 1 PAS/PFS**

P&IDs: UM-1-D-527/1, UM-6-D-501, -502, -517/1, -523, -535, and -539; PLC: ICS-CONR-114; INTERLOCK: I-7

F00 - SPARE
F01 - SPARE
F02 - SPARE
F03 - SPARE
F04 - S/D AGENT PUMPS
F05 - LOCKOUT SECONDARY BURNER (NOTE 1)
F06 - LOCKOUT PRIMARY BURNER (NOTE 1)
F07 - INHIBIT FUEL OIL PURGE OF AGENT LINE
F10 - S/D SEC COMB AIR BLOWER
F11 - S/D PRI COMB AIR BLOWER
F12 - SPARE
F13 - CLOSE DECON/PRW VALVE
F14 - STOP DECON FEED/SWITCH TO PRW
F15 - STOP AGENT FEED
F16 - S/D SEC BURNER
F17 - S/D PRI BURNER
MALFUNCTION

P17 - S/D PFS-COOL-113A/213A FAN B (NOTE 1)
P16 - S/D PFS-COOL-113A/213A FAN A (NOTE 1)
P15 - S/D PFS-COOL-113B/213B FAN B (NOTE 1)
P14 - S/D PFS-COOL-113B/213B FAN A (NOTE 1)
P13 - OPEN QUENCH EMERG. PRW (NOTE 1)
P12 - S/D MIST ELIM WATER RETURN PMP
P11 - BKUP BRINE PUMP ON (NOTE 1)
P10 - BKUP CLEAN LIQ PUMP ON (NOTE 1)
P07 - SPARE
P06 - S/D BRINE PUMPS
P05 - S/D CLEAN LIQUOR PUMPS
P04 - S/D 1ST & 2ND STAGE ID FAN
P03 - SPARE
P02 - BYPASS CARBON FILTER (NOTE 1)
P01 - S/D IST STAGE ID FAN
P00 - S/D 2ND STAGE ID FAN
PREALARM

ITEM NUM	LIC 1 TAG NUMBER	DESCRIPTION	SET POINT	B8:010/ 17	16	15	14	13	12	11	10	07	06	05	04	03	02	01	00	B8:011/ 17	16	15	14	13	12	11	10	07	06	05	04	03	02	01	00	REMARKS	ALARM BIT B001:XX/XX	MASK WORD B8:XX
199	MON ACAM 163	ACAMS LIC PAS	OFFLINE			X	X					X																								RCRA AWFCO LIC 17. Ref. UMAP668LIC. See NOTE 4.	2420/06	90
200	**MON ACAM 357**																																			**RCRA LIC-39**		
201		BRA TANKS LVL HI-HI / UNAVAILABLE	DICO			X	X					X																								RCRA AWFCO LIC 19. See BRA FAWB for tag #s and setpoints.	B4:23/01	210
202		LIC#1 PAS/PFS NORMAL	NOT NORMAL			X	X					X																									B601/00	**260**

CH 1 (RCRA LIC-39)
CH 1 (B601/00 260)

NOTE 1: F05, F06, P02, P10, P11, P13, P14, P15, P16, and P17 responses are not part of the deathwish relay. These responses are included as column headings for presentation clarity.
NOTE 2: The UMCDF CEMS alarm configuration is based on ECP UMAC908MON, R2 and conversations with UMCDF SC personnel. ECPs UMAP668LIC, UMUF866LIC, and UMSF973LIC were also used as references for RCRA and MACT AWFCOs. Setpoints may be modified based on trial burn results.
NOTE 3: 24-LSHHH-114 additional interlocks: 1) close 24-XV-062, 2) close 24-XV-092 and inhibit timer activation, 3) close 24-XY-413B/D. Also when controllers are in AUTO: 1) close 24-LV-113, 2) close 24-LV-115, 3) close 24-AV-116, 4) close 24-AV-091.
NOTE 4: Allowable stack concentration (ASC) for chemical agent are (mg/m3) : GB= 0.0003, H/HD/HT= 0.03, and VX=0.0003. RCRA AWFCO setpoint is 1 ASC. In addition, a RCRA AWFCO is initiated if: 1) Less than two ACAMS are online monitoring the exhaust gas , 2) sampling periods for online ACAMS are not staggered, 3) online ACAMS is in malfunction while in the sampling mode.
NOTE 5: PAS exhaust blower vibration alarms reflect the current design. Per RFI C-ANCDF-005, the blower foundation design requires that the foundation vibration be < 1 mil double amplitude. This requirement was the basis for recommended setpoints in RFI S-ALL-0232. The vibration alarm setpoints may be changed, or new alarms added, to meet the foundation vibration design limits.
NOTE 6: After the Oct 2000 AN PAS/PFS review meeting, the DSIC investigated the clean liquor air cooler vibration alarm setpoints. They found that the Murphy vibration switches are set by turning an uncalibrated screw. Specific vibration units could not be determined. The high vibration switch is set by turning the screw 1/4 turn past its start-up trip point and the high-high switch is set by turning the screw 1/2 turn past its start-up trip point.
NOTE 7: Item number 49 is going to be changed to PDALL-108A and have a prealarm (PDAL-108A). CH 1
NOTE 8: Unit of record can not switch if either the CO or O2 CEMS is in: 1) 10 minute delay after hand switch closure; 2) XS Alarm; 3) In "Calibrate" mode (Zero, Span 1 and 2, and Blowback). CH 1

UMCDF LIQUID INCINERATOR (LIC) #2 POLLUTION ABATEMENT SYSTEM (PAS) AND PAS FILTER SYSTEM (PFS)

CH 4

UMCDF LIC 2 PAS/PFS — ALARM AND INTERLOCK MATRIX — **UMCDF LIC 2 PAS/PFS**

P&IDs: UM-1-D-547/1, UM-6-D-502, -511, -512, -517/2, -523, -525, and -529; PLC: ICS-CONR-119; INTERLOCK: I-22

B8:010/

17	16	15	14	13	12	11	10	07	06	05	04	03	02	01	00
F00 - SPARE	F01 - SPARE	F02 - SPARE	F03 - SPARE	F04 - S/D AGENT PUMPS	F05 - LOCKOUT SECONDARY BURNER (NOTE 1)	F06 - LOCKOUT PRIMARY BURNER (NOTE 1)	F07 - INHIBIT FUEL OIL PURGE OF AGENT LINE	F10 - S/D SEC COMB AIR BLOWER	F11 - S/D PRI COMB AIR BLOWER	F12 - SPARE	F13 - CLOSE DECON/PRW VALVE	F14 - STOP DECON FEED/SWITCH TO PRW	F15 - STOP AGENT FEED	F16 - S/D SEC BURNER	F17 - S/D PRI BURNER

B8:011/

17	16	15	14	13	12	11	10	07	06	05	04	03	02	01	00
P17 - S/D PFS-COOL-113A/213A FAN B (NOTE 1)	P16 - S/D PFS-COOL-113A/213A FAN A (NOTE 1)	P15 - S/D PFS-COOL-113B/213B FAN B (NOTE 1)	P14 - S/D PFS-COOL-113B/213B FAN A (NOTE 1)	P13 - OPEN QUENCH EMERG. PRW (NOTE 1)	P12 - S/D MIST ELIM WATER RETURN PMP	P11 - BKUP BRINE PUMP ON (NOTE 1)	P10 - BKUP CLEAN LIQ PUMP ON (NOTE 1)	P07 - SPARE	P06 - S/D BRINE PUMPS	P05 - S/D CLEAN LIQUOR PUMPS	P04 - S/D 1ST & 2ND STAGE ID FAN	P03 - SPARE	P02 - BYPASS CARBON FILTER (NOTE 1)	P01 - S/D IST STAGE ID FAN	P00 - S/D 2ND STAGE ID FAN

ITEM NUM	LIC 2 TAG NUMBER			DESCRIPTION	SET POINT	MALFUNCTION	17	16	15	14	13	12	11	10	07	06	05	04	03	02	01	00	17	16	15	14	13	12	11	10	07	06	05	04	03	02	01	00	PREALARM	REMARKS	ALARM BIT B001:XX/XX	MASK WORD B8:XX	
1	24	LAH	161	SPARE MIST ELIM. SUMP	18 in																																		X	SP per UM-6-D-502, -512 for LAH-864. Start PAS-PUMP-222 (see FAWB Note B-17). Alarm not shown on UM-6-D-502.	0850/02 **B4:35/02**	NA	CH 4/5
2	24	LAHH	161	SPARE MIST ELIM. SUMP	20 in																																			SP per UM-6-D-502, -512 for LAHH-864. Alarm not shown on UM-6-D-502.	0850/04 **B4:35/03**	NA	CH 5
3	24	LAL	161	SPARE MIST ELIM. SUMP	10 in																																		X	SP per UM-6-D-502, -512 for LAL-864. Alarm not shown on UM-6-D-502. **Alarm only.**	0850/00	NA	CH 5
4	24	LSLL	162	SPARE MIST ELIM. SUMP	8 in																						X													**Time** delay. SP per UM-6-D-502, -512. Alarm active when 24-HS-864 selected to spare mist elim. Hardwired S/D of pump needs to be disabled when 24-HS-864 is aligned to the LIC 2. (Note 24-HS-864 is not shown on P&ID).	0820/00 **B4:35/04**	86	CH 4/5
5	24	LSHH	163	SPARE MIST ELIM. SUMP	66 in																																			**Time** delay. SP per UM-6-D-502, -512. Input to PAS NORMAL relay.	0820/02 **B4:35/01**	NA	CH 4/5
6	24	PDAH	164	SPARE MIST ELIM. CANDLES DP	**18 in wc**																																		X		0850/06	NA	CH 5
7	24	PDAHH	164	SPARE MIST ELIM. CANDLES DP	20 in wc				X	X				X																										**RCRA/MACT AWFCO LIC-38 /LIC(M)-41.**	0850/10 **B4:35/12**	148	CH 4/5
8	24	TAH	276	CLEAN LIQUOR TO SCRUBBER	**135°F**																																		X	SP per RFI S-ALL-232.	1652/12	NA	CH 5
9	24	TAHH	276	CLEAN LIQUOR TO SCRUBBER	143°F				X	X				X																										SP & response per RFI S-ALL-232.	1652/10	**226**	CH 4
10	24	TAL	276	CLEAN LIQUOR TO SCRUBBER	100°F																																		X	SP per RFI S-ALL-232.	1652/14	NA	
11	24	FAH	278	PAS-SCRB-203 CAUSTIC ADDITION	3.4 gpm																																		X	SP per RFI S-ALL-232. Note: AN modified SP	1653/00	NA	
12	24	XA	325	BRINE/CLEAN LIQ. DENSITY	MALF	X																																		Alarm for MALF signal from 24-XS-826 or 24-XS-835.	**1621/00**	NA	CH 4
13	24	TSH	452A/B	1st STAGE ID FAN BEARING TEMP	**156°F**																																		X	SP from vendor info.	**1222/16**	**NA**	CH 4
14	24	TSHH	452A/B	1st STAGE ID FAN BEARING TEMP	**198°F**				X	X				X																							X			SP from vendor info. UM-6-D-517 Note 14 specifies S/D 1st stage, except when running in emergency mode.	1221/10	122	CH 4
15	24	TSH	453A/B	2nd STAGE ID FAN BEARING TEMP	**156°F**																																		X	SP from vendor info.	**1223/00**	**NA**	CH 4
16	24	TSHH	453A/B	2nd STAGE ID FAN BEARING TEMP	**198°F**				X	X				X																								X		SP from vendor info. UM-6-D-517 Note 14 specifies S/D 2nd stage, except when running in emergency mode.	1221/12	138	CH 4
17	24	PDAH	618	PAS-PUMP-131 DISCH FILTER	5.0 psid																																		X		0650/06 **B4:35/15**	NA	CH 5
18	24	XAH	709	2nd STAGE ID FAN VIBRATION	0.25 in/sec				X	X				X																										See NOTE 5.	1251/06	**152**	CH 4/5

UMCDF LIQUID INCINERATOR (LIC) #2 POLLUTION ABATEMENT SYSTEM (PAS) AND PAS FILTER SYSTEM (PFS)

UMCDF LIC 2 PAS/PFS — ALARM AND INTERLOCK MATRIX — **UMCDF LIC 2 PAS/PFS**

P&IDs: UM-1-D-547/1, UM-6-D-502, -511, -512, -517/2, -523, -525, and -529; PLC: ICS-CONR-119; INTERLOCK: I-22

CH 4

B8:010/

F00 - SPARE
F01 - SPARE
F02 - SPARE
F03 - SPARE
F04 - S/D AGENT PUMPS
F05 - LOCKOUT SECONDARY BURNER (NOTE 1)
F06 - LOCKOUT PRIMARY BURNER (NOTE 1)
F07 - INHIBIT FUEL OIL PURGE OF AGENT LINE
F10 - S/D SEC COMB AIR BLOWER
F11 - S/D PRI COMB AIR BLOWER
F12 - SPARE
F13 - CLOSE DECON/PRW VALVE
F14 - STOP DECON FEED/SWITCH TO PRW
F15 - STOP AGENT FEED
F16 - S/D SEC BURNER
F17 - S/D PRI BURNER
MALFUNCTION

B8:011/

P17 - S/D PFS-COOL-113A/213A FAN B (NOTE 1)
P16 - S/D PFS-COOL-113A/213A FAN A (NOTE 1)
P15 - S/D PFS-COOL-113B/213B FAN B (NOTE 1)
P14 - S/D PFS-COOL-113B/213B FAN A (NOTE 1)
P13 - OPEN QUENCH EMERG. PRW (NOTE 1)
P12 - S/D MIST ELIM WATER RETURN PMP
P11 - BKUP BRINE PUMP ON (NOTE 1)
P10 - BKUP CLEAN LIQ PUMP ON (NOTE 1)
P07 - SPARE
P06 - S/D BRINE PUMPS
P05 - S/D CLEAN LIQUOR PUMPS
P04 - S/D 1ST & 2ND STAGE ID FAN
P03 - SPARE
P02 - BYPASS CARBON FILTER (NOTE 1)
P01 - S/D IST STAGE ID FAN
P00 - S/D 2ND STAGE ID FAN
PREALARM

ITEM NUM	LIC 2 TAG NUMBER	DESCRIPTION	SET POINT	17	16	15	14	13	12	11	10	07	06	05	04	03	02	01	00	17	16	15	14	13	12	11	10	07	06	05	04	03	02	01	00	REMARKS	ALARM BIT B001:XX/XX	MASK WORD B8:XX	
19	24 XSHH 709	2nd STAGE ID FAN VIBRATION	0.5 in/sec																																X	S/D 2nd stage, except when running in emergency mode. See NOTE 5.	1220/06	64	CH 4/5
20	24 IAH 710	ID FAN 2ND STAGE MTR	**299 amp**			X	X				X																								**X**	**Time** delay on startup. **Second stage shutdown.** SP per **UMCDF**.	1250/02 **B2:8/01**	96	CH 4/5
21	24 TSH 711A-F	2nd STAGE ID FAN WINDING TEMP	320°F			**X**	**X**				**X**																									**X**	SP from vendor info. Alarm on high temp for any of 24-TSH-711A through F.	1222/14	**152**	CH 4/5
22	24 TSHH 711A-F	2nd STAGE ID FAN WINDING TEMP	**312°F**																																X	SP from vendor info. Alarm on high-high temp for any of 24-TSHH-711A through F. UM-6-D-517 Note 14 specifies S/D 2nd stage, except when running in emergency mode.	1220/00	128	CH 4/5
23	24 XA 712	1st & 2nd STAGE ID FAN	NOT RUNNING		X	X	X	X		X	X	X																										I:313/00 I:313/02	116	
24	24 XA 713	ID FAN 2ND STAGE MTR	MALF	X			X	X				X																							X	Start I-lock for 2nd stage motor.	1263/11	**104**	CH 4
25	24 XA 714	2nd STAGE ID FAN TROUBLE	Trouble				X	X				X																							X	Alarm response per RFI C-ANCDF-002. Trouble alarm initiated by ASD motor thermal overload which stops the motor.	1223/06	**104**	CH 4
26	24 SAH 714A	2nd STAGE ID FAN SPEED	1800 rpm				X	X				X																										SP per RFI S-ALL-232.	1250/16	**96**	CH 4
27	**24 ADH 716**	**LIC EXH GAS CO DIFFERENTIAL**	**+/- 12 ppm**																																**X**	**Differential alarm.**	**1255/16**	**NA**	CH 4
28	24 AAH 716A	LIC EXH GAS CO TO STACK	160 ppm																																X	Instantaneous alarm. Corrected to 7% O2 dry basis. See NOTE 2.	**1255/02**	NA	CH 4
29	**24 AAHH 716A**	**LIC EXH GAS CO TO STACK**	**170 ppm**			**X**	**X**				**X**																										**Instantaneous stop feed. Corrected to 7% O2 dry basis. See NOTE 2.**	**1255/00**	**22**	CH 4
30	24 **MAH** 716A	LIC EXH GAS STACK CO MOISTURE	**38 %**			**X**	**X**				**X**																										Switch racks on high humidity. If second unit also alarms on high humidity, stop feed. See NOTE 2.	**1224/10**	**36**	CH 4
31	24 XS 716A	LIC EXH GAS **CO ANALYZER MALF**	MALF	X		X	X				X																										Stop feed on malf. alarm only if 24-AIT-716B is also in malf. or is in "calibrate" mode. **Activation has 5 sec delay.** See NOTE 2.	**1224/04**	**36**	CH 4
32	24 HS 716A/716B	BOTH LIC 2 PAS CO ANAL. IN CAL**IB**	In Calib			X	X				X																										**Stop Feed with both analyzers in "calibrate". See NOTE 8.**	1222/06	**148**	CH 4/5
33	24 AAH 716B	LIC EXH GAS CO TO STACK	160 ppm																																X	Instantaneous alarm. Corrected to 7% O2 dry basis. See NOTE 2.	**1255/06**	NA	CH 4

UMCDF LIQUID INCINERATOR (LIC) #2 POLLUTION ABATEMENT SYSTEM (PAS) AND PAS FILTER SYSTEM (PFS)

UMCDF LIC 2 PAS/PFS — ALARM AND INTERLOCK MATRIX — **UMCDF LIC 2 PAS/PFS**

P&IDs: UM-1-D-547/1, UM-6-D-502, -511, -512, -517/2, -523, -525, and -529; PLC: ICS-CONR-119; INTERLOCK: I-22

CH 4

B8:010/

17	16	15	14	13	12	11	10	07	06	05	04	03	02	01	00
F00 - SPARE	F01 - SPARE	F02 - SPARE	F03 - SPARE	F04 - S/D AGENT PUMPS	F05 - LOCKOUT SECONDARY BURNER (NOTE 1)	F06 - LOCKOUT PRIMARY BURNER (NOTE 1)	F07 - INHIBIT FUEL OIL PURGE OF AGENT LINE	F10 - S/D SEC COMB AIR BLOWER	F11 - S/D PRI COMB AIR BLOWER	F12 - SPARE	F13 - CLOSE DECON/PRW VALVE	F14 - STOP DECON FEED/SWITCH TO PRW	F15 - STOP AGENT FEED	F16 - S/D SEC BURNER	F17 - S/D PRI BURNER

B8:011/

17	16	15	14	13	12	11	10	07	06	05	04	03	02	01	00
P17 - S/D PFS-COOL-113A/213A FAN B (NOTE 1)	P16 - S/D PFS-COOL-113A/213A FAN A (NOTE 1)	P15 - S/D PFS-COOL-113B/213B FAN B (NOTE 1)	P14 - S/D PFS-COOL-113B/213B FAN A (NOTE 1)	P13 - OPEN QUENCH EMERG. PRW (NOTE 1)	P12 - S/D MIST ELIM WATER RETURN PMP	P11 - BKUP BRINE PUMP ON (NOTE 1)	P10 - BKUP CLEAN LIQ PUMP ON (NOTE 1)	P07 - SPARE	P06 - S/D BRINE PUMPS	P05 - S/D CLEAN LIQUOR PUMPS	P04 - S/D 1ST & 2ND STAGE ID FAN	P03 - SPARE	P02 - BYPASS CARBON FILTER (NOTE 1)	P01 - S/D IST STAGE ID FAN	P00 - S/D 2ND STAGE ID FAN

MALFUNCTION — PREALARM

ITEM NUM	LIC 2 TAG NUMBER			DESCRIPTION		SET POINT	17	16	15	14	13	12	11	10	07	06	05	04	03	02	01	00	17	16	15	14	13	12	11	10	07	06	05	04	03	02	01	00		REMARKS	ALARM BIT B001:XX/XX	MASK WORD B8:XX	
34	**24**	**AAHH**	**716B**	**LIC EXH GAS**	**CO TO STACK**	**170 ppm**			**X**	**X**					**X**																									**Instantaneous stop feed. Corrected to 7% O2 dry basis. See NOTE 2.**	**1255/04**	**22**	CH 4
35	24	**MAH**	716B	LIC EXH GAS STACK CO MOISTURE		**38 %**			**X**	**X**					**X**																									Switch racks on high humidity. If second unit also alarms on high humidity, stop feed. See NOTE 2.	**1224/12**	**36**	CH 4
36	24	XS	716B	LIC EXH GAS **CO ANALYZER MALF**		MALF	X		X	X					X																									Stop feed on malf. alarm only if 24-AIT-716A is also in malf. or is in "calibrate" mode. **Activation has 5 sec delay.** See NOTE 2.	**1224/06**	**36**	CH 4
37	24	AAH	716C	LIC EXH GAS	CO TO STACK	90 ppm																																	X	ROHA. Corrected to 7% O2 dry basis. See NOTE 2.	**1255/12**	NA	CH 4
38	24	AAHH	716C	LIC EXH GAS	CO TO STACK	100 ppm			X	X					X																									RCRA AWFCO LIC-12 and MACT AWFCO LIC(M)-**15**. ROHA. Corrected to 7% O2 dry basis. See NOTE 2.	**1255/10**	**22**	CH 4
39	**24**	**ADH**	**717**	**O2 DIFFERENTIAL ALARM**		**+/- 1% O2**																																	**X**	**Differential alarm for O2 based on moisture corrected value.**	**1255/14**	**NA**	CH 4
40	24	AAH	717A	LIC FLUE GAS	TO STACK 02	12% O2																																	X	Corrected to dry basis. See NOTE 2.	**1254/02**	NA	CH 4
41	24	AAHH	717A	LIC FLUE GAS	TO STACK 02	13% O2			X	X					X																									RCRA AWFCO LIC-26. Corrected to dry basis. See NOTE 2.	**1254/00**	**34**	CH 4
42	24	AAL	717A	LIC FLUE GAS	TO STACK 02	**5.5% O2**																																	X	Corrected to dry basis. See NOTE 2.	**1254/04**	NA	CH 4/5
43	24	AALL	717A	LIC FLUE GAS	TO STACK 02	5% O2			X	X					X																									RCRA/**MACT** AWFCO LIC-27 **/LIC(M)-29**. Corrected to dry basis. See NOTE 2.	**1254/06**	**34**	CH 4
44	24	XS	717A	LIC FLUE GAS **O2 ANALYZER MALF.**		MALF	X		X	X					X																									Stop feed on malf. alarm only if 24-AIT-717B is also in malf. or is in "calibrate" mode. **Activation has 5 sec delay.** See NOTE 2.	**1224/00**	36	CH 4
45	24	HS	717A/717B	BOTH LIC 2 PAS O2 ANALYZERS IN CAL		In Calib			X	X					X																									**Stop Feed with both analyzers in "calibrate". See NOTE 8.**	**1221/14**	**148**	CH 4/5
46	24	AAH	717B	LIC FLUE GAS	TO STACK 02	12% O2																																	X	Corrected to dry basis. See NOTE 2.	**1254/12**	NA	CH 4
47	24	AAHH	717B	LIC FLUE GAS	TO STACK 02	13% O2			X	X					X																									RCRA AWFCO LIC-26. Corrected to dry basis. See NOTE 2.	**1254/10**	**34**	CH 4
48	24	AAL	717B	LIC FLUE GAS	TO STACK 02	**5.5% O2**																																	X	Corrected to dry basis. See NOTE 2.	**1254/14**	NA	CH 4/5
49	24	AALL	717B	LIC FLUE GAS	TO STACK 02	5% O2			X	X					X																									RCRA/**MACT** AWFCO LIC-27 **/LIC(M)-29**. Corrected to dry basis. See NOTE 2.	**1254/16**	**34**	CH 4

UMCDF LIQUID INCINERATOR (LIC) #2 POLLUTION ABATEMENT SYSTEM (PAS) AND PAS FILTER SYSTEM (PFS)

UMCDF LIC 2 PAS/PFS — ALARM AND INTERLOCK MATRIX — **UMCDF LIC 2 PAS/PFS**

P&IDs: UM-1-D-547/1, UM-6-D-502, -511, -512, -517/2, -523, -525, and -529; PLC: ICS-CONR-119; INTERLOCK: I-22

B8:010/

F00 - SPARE
F01 - SPARE
F02 - SPARE
F03 - SPARE
F04 - S/D AGENT PUMPS
F05 - LOCKOUT SECONDARY BURNER (NOTE 1)
F06 - LOCKOUT PRIMARY BURNER (NOTE 1)
F07 - INHIBIT FUEL OIL PURGE OF AGENT LINE
F10 - S/D SEC COMB AIR BLOWER
F11 - S/D PRI COMB AIR BLOWER
F12 - SPARE
F13 - CLOSE DECON/PRW VALVE
F14 - STOP DECON FEED/SWITCH TO PRW
F15 - STOP AGENT FEED
F16 - S/D SEC BURNER
F17 - S/D PRI BURNER
MALFUNCTION

B8:011/

P17 - S/D PFS-COOL-113A/213A FAN B (NOTE 1)
P16 - S/D PFS-COOL-113A/213A FAN A (NOTE 1)
P15 - S/D PFS-COOL-113B/213B FAN B (NOTE 1)
P14 - S/D PFS-COOL-113B/213B FAN A (NOTE 1)
P13 - OPEN QUENCH EMERG. PRW (NOTE 1)
P12 - S/D MIST ELIM WATER RETURN PMP
P11 - BKUP BRINE PUMP ON (NOTE 1)
P10 - BKUP CLEAN LIQ PUMP ON (NOTE 1)
P07 - SPARE
P06 - S/D BRINE PUMPS
P05 - S/D CLEAN LIQUOR PUMPS
P04 - S/D 1ST & 2ND STAGE ID FAN
P03 - SPARE
P02 - BYPASS CARBON FILTER (NOTE 1)
P01 - S/D IST STAGE ID FAN
P00 - S/D 2ND STAGE ID FAN
PREALARM

ITEM NUM	LIC 2 TAG NUMBER			DESCRIPTION	SET POINT	17	16	15	14	13	12	11	10	07	06	05	04	03	02	01	00	17	16	15	14	13	12	11	10	07	06	05	04	03	02	01	00		REMARKS	ALARM BIT B001:XX/XX	MASK WORD B8:XX	
50	24	XS	717B	LIC FLUE GAS **O2 ANALYZER MALF.**	MALF	X		X	X					X																										Stop feed on malf. alarm only if 24-AIT-717A is also in malf. or is in "calibrate" mode. **Activation has 5 sec delay.** See NOTE 2.	**1224/02**	36	CH 4
51	24	FISL	731	PAS MIST ELIM. WTR RTN PUMP	0.15 gpm																						X													**Time** delay. SP from instrument data sheet.	0620/12	NA	CH 4
52	24	XA	776	1st STAGE ID FAN TROUBLE	Trouble			X	X					X																						X				Alarm response per RFI C-ANCDF-002. Trouble alarm initiated by ASD motor thermal overload which stops the motor.	1223/04	**118**	CH 4
53	24	SAH	776A	1st STAGE ID FAN SPEED	1800 rpm			X	X					X																										SP per RFI S-ALL-232.	1250/14	**112**	CH 4
54	24	FSL	799	PAS SCRUBBER PROCESS WATER	20 gpm																																			**Time** delay. SP from instrument data sheet. Active only when 24-XV-798 is energized. **Alarm only.**	1620/10	NA	CH 4/5
55	24	TSHH	800	PAS QUENCH OVERHEAD	225 F			X	X					X												X														RCRA AWFCO LIC 22. Ref. UMAP668LIC & UMSF973LIC. See FAWB Note B-7. **Hardwired.**	1420/00	68	CH 5
56	24	FSL	801	PAS QUENCH PROCESS WATER	10 gpm																																			**Time** delay. SP from instrument data sheet. Active only when 24-TV-800 is open. **Alarm only.**	1420/02	NA	CH 4/5
57	24	PDAH	808	BRINE TO QUENCH FILTER	10.0 psid																																	X			1450/06	NA	
58	24	LAH	810	PAS QUENCH SUMP	**4.0 in**																																	X	SP from P&ID.	1450/04	NA	CH 5
59	24	LAHH	810	PAS QUENCH SUMP	**8.0 in**	X	X	X	X					X																										SP from P&ID. Shuts off brine spray to quench tower and PRW makeup to quench brine. Input to PAS NORMAL relay. **Time delay.**	1450/02	80	CH 4/5
60	24	PDAH	814	PAS VENTURI SCRUBBER	SP+10 in wc																																	X	SP=setpoint entered in controller by operator	1850/06	NA	
61	24	PDAL	814	PAS VENTURI SCRUBBER	25 in wc																																	X		1850/04	NA	
62	24	PDALL	814	PAS VENTURI SCRUBBER	20 in wc			X	X					X																										RCRA/**MACT** AWFCO LIC 15 **/LIC(M)-18**. Ref: UMAP668LIC	1851/00	72	CH 4
63	24	PDALL	814A	PAS VENTURI SCRUBBER	**20 in wc**			X	X					X																										MACT AWFCO LIC(M)-**19**. ROHA. Ref. UMSF973LIC.	**1852/00**	**44**	CH 4
64	24	TAH	816	PAS QUENCH TWR OVERHEAD TEMP	200°F																																	X	(see FAWB Note B-7)	1450/10	NA	
65	24	TSHHH	817	PAS QUENCH TWR OVERHEAD TEMP	250°F	X	X	X	X					X																										SP from UMAC817ICS. Input to PAS NORMAL relay. See FAWB Note B-7.	1420/10	98	
66	24	LAH	818	PAS SCRUBBER BRINE SUMP	**56 in**																																	X	Prealarm per ANCDF Oct 2000 PAS/PFS mtg. **Input to PAS NORMAL.**	1650/16	**NA**	CH 4/5
67	24	LAL	818	PAS SCRUBBER BRINE SUMP	**32 in**																																	X	Prealarm per ANCDF Oct 2000 PAS/PFS mtg. **Input to PAS NORMAL.**	1650/14	**NA**	CH 4/5

UMCDF LIQUID INCINERATOR (LIC) #2 POLLUTION ABATEMENT SYSTEM (PAS) AND PAS FILTER SYSTEM (PFS)

CH 4

UMCDF LIC 2 PAS/PFS — ALARM AND INTERLOCK MATRIX — **UMCDF LIC 2 PAS/PFS**

P&IDs: UM-1-D-547/1, UM-6-D-502, -511, -512, -517/2, -523, -525, and -529; PLC: ICS-CONR-119; INTERLOCK: I-22

B8:010/

F00 - SPARE
F01 - SPARE
F02 - SPARE
F03 - SPARE
F04 - S/D AGENT PUMPS
F05 - LOCKOUT SECONDARY BURNER (NOTE 1)
F06 - LOCKOUT PRIMARY BURNER (NOTE 1)
F07 - INHIBIT FUEL OIL PURGE OF AGENT LINE
F10 - S/D SEC COMB AIR BLOWER
F11 - S/D PRI COMB AIR BLOWER
F12 - SPARE
F13 - CLOSE DECON/PRW VALVE
F14 - STOP DECON FEED/SWITCH TO PRW
F15 - STOP AGENT FEED
F16 - S/D SEC BURNER
F17 - S/D PRI BURNER
MALFUNCTION

B8:011/

P17 - S/D PFS-COOL-113A/213A FAN B (NOTE 1)
P16 - S/D PFS-COOL-113A/213A FAN A (NOTE 1)
P15 - S/D PFS-COOL-113B/213B FAN B (NOTE 1)
P14 - S/D PFS-COOL-113B/213B FAN A (NOTE 1)
P13 - OPEN QUENCH EMERG. PRW (NOTE 1)
P12 - S/D MIST ELIM WATER RETURN PMP
P11 - BKUP BRINE PUMP ON (NOTE 1)
P10 - BKUP CLEAN LIQ PUMP ON (NOTE 1)
P07 - SPARE
P06 - S/D BRINE PUMPS
P05 - S/D CLEAN LIQUOR PUMPS
P04 - S/D 1ST & 2ND STAGE ID FAN
P03 - SPARE
P02 - BYPASS CARBON FILTER (NOTE 1)
P01 - S/D IST STAGE ID FAN
P00 - S/D 2ND STAGE ID FAN
PREALARM

ITEM NUM	LIC 2 TAG NUMBER	DESCRIPTION	SET POINT	17	16	15	14	13	12	11	10	07	06	05	04	03	02	01	00	17	16	15	14	13	12	11	10	07	06	05	04	03	02	01	00	PREALARM	REMARKS	ALARM BIT B001:XX/XX	MASK WORD B8:XX	
68	24 LSHH 818	PAS SCRUBBER BRINE SUMP	**62 in**			X	X					X																									RCRA AWFCO LIC 25. Measured from bottom **nozzle of LG bridle (Equivalent to 86 inches above the bottom tangent line)**. Ref. UMAP668LIC. Open 24-DV-835 (Deenergize 24-LY-835).	1621/10	**220**	CH 4/5
69	24 LSLL 818	PAS SCRUBBER BRINE SUMP	**26 in**			X	X					X																									RCRA AWFCO LIC 29. Measured from bottom **nozzle of LG bridle (Equivalent to 50 inches above the bottom tangent line)**. Ref. UMAP668LIC. Close 24-DV-835 (24-LY-835 energized and drive 24-DY-835 to close).	1621/12	**222**	CH 4/5
70	24 LSHHH 819	PAS SCRUBBER BRINE SUMP	92 in	X	X	X	X					X													X												**Time** delay. Input to PAS NORMAL relay (see FAWB Note B-19). See NOTE 3 for additional interlocks. **S/D only if 24-LSHH-818 or 24-LSH-818 is also activated.**	1620/02	74	CH 4/5
71	24 LSLLL 820	PAS SCRUBBER SCRUBBER SUMP	44 in	X	X	X	X					X																	X								**Time** delay. Input to PAS NORMAL relay (see FAWB Note B-19).	1620/00	70	CH 4
72	24 LSLL 821	PAS SCRUBBER CLEAN LIQ SUMP	3 in			X	X					X																		X							**Time** delay. SP from P&ID (14 ft 0 in. minus 12 ft 0 in. offset). SP is 9 in. above bottom of chimney tray well point. Alarm response per Oct 2000 ANCDF PAS/PFS mtg. **Shutdown only if 24-LAL-824 is also activated.**	1620/12 **1650/12**	100	CH 4/5
73	24 PDAH 822	PAS SCRUBBER PACKED BED	6 in wc																																	X	**Prealarm.**	1651/10	NA	CH 5
74	**24 PDAL 822A**	**PAS SCRUBBER PACKED BED**	**0.5 in wc**																																	**X**	**Prealarm.**	**1621/16**	**NA**	CH 4/5
75	24 PDAL**L** 822A	PAS SCRUBBER PACKED BED	**0.3 in wc**			X	X					X																									MACT AWFCO LIC(M)-**39**. ROHA. Ref. UMUF866LIC. **NOTE 7.**	**1621/14**	**230**	CH 4/5
76	24 PDAH 823	PAS SCRUBBER MIST PAD	2 in wc																																	X		1651/06	NA	
77	24 LAL 824	PAS SCRUBBER CLEAN LIQ SUMP	24 in			**X**	**X**					**X**																		**X**						X	SP from P&ID (14 ft 0 in. minus 12 ft 0 in. offset). SP is 30 in. above bottom of chimney tray well point. Alarm response per Oct 2000 ANCDF PAS/PFS mtg. **S/D only if 24-LSLL-821 is also activated.**	1650/12 **1620/12**	100	CH 4/5
78	24 FAL 825	CLEAN LIQUOR TO SCRUBBER	SP-10%																																	X	SP = flow setpoint entered in controller by operator. Design flow is 778 gpm.	1650/10	NA	
79	24 FALL 825	CLEAN LIQUOR TO SCRUBBER	700 gpm			X	X					X																									RCRA/**MACT** AWFCO LIC 16 **/LIC(M)-20**. Ref. UMSF973LIC.	1650/06	146	CH 4
80	24 FALL 825A	CLEAN LIQUOR TO SCRUBBER	**700 gpm**			X	X					X																									MACT AWFCO LIC(M)-**21**. ROHA. Ref. UMUF866LIC.	**1652/02**	**44**	CH 4

UMCDF LIQUID INCINERATOR (LIC) #2 POLLUTION ABATEMENT SYSTEM (PAS) AND PAS FILTER SYSTEM (PFS)

UMCDF LIC 2 PAS/PFS — ALARM AND INTERLOCK MATRIX — **UMCDF LIC 2 PAS/PFS**

P&IDs: UM-1-D-547/1, UM-6-D-502, -511, -512, -517/2, -523, -525, and -529; PLC: ICS-CONR-119; INTERLOCK: I-22

CH 4

B8:010/

F00 - SPARE
F01 - SPARE
F02 - SPARE
F03 - SPARE
F04 - S/D AGENT PUMPS
F05 - LOCKOUT SECONDARY BURNER (NOTE 1)
F06 - LOCKOUT PRIMARY BURNER (NOTE 1)
F07 - INHIBIT FUEL OIL PURGE OF AGENT LINE
F10 - S/D SEC COMB AIR BLOWER
F11 - S/D PRI COMB AIR BLOWER
F12 - SPARE
F13 - CLOSE DECON/PRW VALVE
F14 - STOP DECON FEED/SWITCH TO PRW
F15 - STOP AGENT FEED
F16 - S/D SEC BURNER
F17 - S/D PRI BURNER
MALFUNCTION

B8:011/

P17 - S/D PFS-COOL-113A/213A FAN B (NOTE 1)
P16 - S/D PFS-COOL-113A/213A FAN A (NOTE 1)
P15 - S/D PFS-COOL-113B/213B FAN B (NOTE 1)
P14 - S/D PFS-COOL-113B/213B FAN A (NOTE 1)
P13 - OPEN QUENCH EMERG. PRW (NOTE 1)
P12 - S/D MIST ELIM WATER RETURN PMP
P11 - BKUP BRINE PUMP ON (NOTE 1)
P10 - BKUP CLEAN LIQ PUMP ON (NOTE 1)
P07 - SPARE
P06 - S/D BRINE PUMPS
P05 - S/D CLEAN LIQUOR PUMPS
P04 - S/D 1ST & 2ND STAGE ID FAN
P03 - SPARE
P02 - BYPASS CARBON FILTER (NOTE 1)
P01 - S/D IST STAGE ID FAN
P00 - S/D 2ND STAGE ID FAN
PREALARM

ITEM NUM	LIC 2 TAG NUMBER			DESCRIPTION		SET POINT	17	16	15	14	13	12	11	10	07	06	05	04	03	02	01	00	17	16	15	14	13	12	11	10	07	06	05	04	03	02	01	00		REMARKS	ALARM BIT B001:XX/XX	MASK WORD B8:XX	
81	24	DAH	826	CLEAN LIQUOR	DENSITY	**1.03 sg**																																	X		1651/04	NA	CH 4
82	24	DAHH	826	CLEAN LIQUOR	DENSITY	1.25 sg																																	X		1651/12	NA	CH 4
83	24	DAHH	826A	CLEAN LIQUOR	DENSITY	1.04 sg			X	X				X																										MACT AWFCO LIC(M)-**40**. Based on 12-hr rolling avg. Ref. UMSF973LIC.	**1652/06**	**44**	CH 4
84	24	FAL	827	PAS QUENCH	BRINE	60 gpm																																	X		1450/00	NA	
85	24	FAL	828	BRINE TO LIC	VENTURI SCRBR	130 gpm																																	X	**Time** delay. Prealarm per UMAP668LIC. SP per RFI C-ANCDF-003R1.	**1850/02**	NA	CH 4
86	24	FALL	828	BRINE TO LIC	VENTURI SCRBR	126 gpm			X	X				X																										RCRA **/MACT**AWFCO LIC 23 **/LIC(M)-25**. Ref. UMAP668LIC & RFI C-ANCDF-003R1.	**1851/14**	66	CH 4
87	24	FALL	828A	BRINE TO LIC	VENTURI SCRBR	**126 gpm**			X	X				X																										MACT AWFCO LIC(M)-**26**. ROHA. Ref. UMSF973LIC.	**1852/02**	**44**	CH 4
88	24	PDAH	829	PAS VENTURI	BRINE FILTER	10.0 psid																																	X		1850/14	NA	
89	24	AAH	831	PAS QUENCH	BRINE pH	9.5 pH																																	X		1850/12	NA	
90	24	AAL	831	PAS QUENCH	BRINE pH	**6.0 pH**																																	X		1850/10	NA	CH 5
91	24	AALL	831	PAS QUENCH	BRINE pH	**5.0 pH**			X	X				X																										Alarm is at TOCDF and is in Jan 2000 ANCDF code, but is not shown on UM-6-D-511.	1851/04	76	CH 4/5
92	24	AALL	831A/**B**	PAS QUENCH	BRINE pH	**5.5 pH**			X	X				X																										MACT AWFCO LIC(M)-**38**. ROHA. Ref. UMSF973LIC. Alarm active only when 24-AE-831A/**B** is online.	**1852/06**	**44**	CH 4
93	24	AIT	831A/B	PAS QUENCH	BRINE pH	**Maintenance**			X	X				X																										Shutdown requires that AIT-831A and -831B are in **maintenance** mode. Alarm from Jan 2000 ANCDF code. See FAWB Note B-16.	**1870/13 1871/13**	**150**	CH 4/5
94	24	AAH	832	PAS SCRUBBER	CLEAN LIQUOR pH	9.5 pH																																	X		1651/02	NA	
95	24	AAL	832**A/B**	PAS SCRUBBER	CLEAN LIQUOR pH	**7.7 pH**																																	X		**1651/00**	NA	CH 4
96	24	AALL	832	PAS SCRUBBER	CLEAN LIQUOR pH	7.5 pH			X	X				X																										RCRA/**MACT** AWFCO LIC 20 **/LIC(M)-22**. Ref. UMSF973LIC. See FAWB Note B-16.	**1652/00**	**76**	CH 4
97	24	AALL	832A/**B**	PAS SCRUBBER	CLEAN LIQUOR pH	**7.5 pH**			X	X				X																										MACT AWFCO LIC(M)-**23**. ROHA. Ref. UMSF973LIC. Alarm active only when 24-AE-832A/**B** is online. See FAWB Note B-16.	**1652/04**	**44**	CH 4
98	24	DAH	835	PAS QUENCH	BRINE DENSITY	**SP + 0.03**																																	X	Setpoint from RFI S-ALL-0232 but will be revised based on UMSF973LIC.	1850/16	NA	CH 4/5

UMCDF LIQUID INCINERATOR (LIC) #2 POLLUTION ABATEMENT SYSTEM (PAS) AND PAS FILTER SYSTEM (PFS)

UMCDF LIC 2 PAS/PFS — ALARM AND INTERLOCK MATRIX — **UMCDF LIC 2 PAS/PFS**

P&IDs: UM-1-D-547/1, UM-6-D-502, -511, -512, -517/2, -523, -525, and -529; PLC: ICS-CONR-119; INTERLOCK: I-22

CH 4

B8:010/

F00 - SPARE
F01 - SPARE
F02 - SPARE
F03 - SPARE
F04 - S/D AGENT PUMPS
F05 - LOCKOUT SECONDARY BURNER (NOTE 1)
F06 - LOCKOUT PRIMARY BURNER (NOTE 1)
F07 - INHIBIT FUEL OIL PURGE OF AGENT LINE
F10 - S/D SEC COMB AIR BLOWER
F11 - S/D PRI COMB AIR BLOWER
F12 - SPARE
F13 - CLOSE DECON/PRW VALVE
F14 - STOP DECON FEED/SWITCH TO PRW
F15 - STOP AGENT FEED
F16 - S/D SEC BURNER
F17 - S/D PRI BURNER
MALFUNCTION

B8:011/

P17 - S/D PFS-COOL-113A/213A FAN B (NOTE 1)
P16 - S/D PFS-COOL-113A/213A FAN A (NOTE 1)
P15 - S/D PFS-COOL-113B/213B FAN B (NOTE 1)
P14 - S/D PFS-COOL-113B/213B FAN A (NOTE 1)
P13 - OPEN QUENCH EMERG. PRW (NOTE 1)
P12 - S/D MIST ELIM WATER RETURN PMP
P11 - BKUP BRINE PUMP ON (NOTE 1)
P10 - BKUP CLEAN LIQ PUMP ON (NOTE 1)
P07 - SPARE
P06 - S/D BRINE PUMPS
P05 - S/D CLEAN LIQUOR PUMPS
P04 - S/D 1ST & 2ND STAGE ID FAN
P03 - SPARE
P02 - BYPASS CARBON FILTER (NOTE 1)
P01 - S/D IST STAGE ID FAN
P00 - S/D 2ND STAGE ID FAN
PREALARM

ITEM NUM	LIC 2 TAG NUMBER			DESCRIPTION		SET POINT	17	16	15	14	13	12	11	10	07	06	05	04	03	02	01	00	17	16	15	14	13	12	11	10	07	06	05	04	03	02	01	00	PREALARM	REMARKS	ALARM BIT B001:XX/XX	MASK WORD B8:XX	
99	24	DAHH	835	PAS QUENCH	BRINE DENSITY	1.16 sg			X	X					X																									RCRA/**MACT** AWFCO LIC-24 **/LIC(M)-27**. Ref. UMSF973LIC.	1851/02	228	CH 4
100	24	DAHH	835A	PAS QUENCH	BRINE DENSITY	**1.16 sg**			X	X					X																									MACT AWFCO LIC(M)-**28**. Based on 12-hr rolling avg. Ref. UMSF973LIC.	**1852/04**	**44**	CH 4
101	24	PAL	838	BRINE PUMP	DISCHARGE	80 psig																							X											SP per DSIC. Switchover to secondary pump on low pressure alarm when primary is running.	1850/00	NA	
102	24	PALL	838	BRINE PUMP	DISCHARGE	40 psig			X	X					X																									**Time delay.**	1851/12	242	CH 5
103	24	PDAH	840	PAS SCRUBBER	CLEAN LIQ FIL	10 psid																																	X		1650/02	NA	
104	24	FISL	841	PAS-PUMP-211 SEAL WATER		0.15 gpm																							**X**											**Time** delay. S/D PAS-PUMP-211 if selected as primary, which will cause 24-XA-844 to alarm. SP from instrument data sheet.	1820/00	NA	CH 4
105	24	XA	844	PAS-PUMP-211 QUENCH BRINE		MALF	X																						X											Switchover to secondary pump on malfunction alarm when PAS-PUMP-211 is selected as primary.	1860/11	NA	
106	24	FISL	845	PAS-PUMP-212 SEAL WATER		0.15 gpm																							**X**											**Time** delay. S/D PAS-PUMP-212 if selected as primary, which will cause 24-XA-848 to alarm. SP from instrument data sheet.	1820/02	NA	CH 4
107	24	XA	848	PAS-PUMP-212 QUENCH BRINE		MALF	X																						X											Switchover to secondary pump on malfunction alarm when PAS-PUMP-212 is selected as primary.	1862/11	NA	
108	24	LAH	864	PAS MIST ELIM.	SUMP	18 in																																	**X**	SP per UM-6-D-512. Start PAS-PUMP-222 (see FAWB Note B-17).	0650/02	NA	CH 4
109	24	LAHH	864	PAS MIST ELIM.	SUMP	20 in																																		SP per UM-6-D-512. **Alarm.**	0650/10	NA	CH 4
110	24	LAL	864	PAS MIST ELIM.	SUMP	10 in																																	X	SP per UM-6-D-512.	0650/00	NA	
111	24	LSLL	865	PAS MIST ELIM.	SUMP	8 in																						X												**Time** delay. SP per UM-6-D-512. Alarm active when 24-HS-864 selected to LIC 2 mist elim. Hardwired S/D of pump needs to be disabled when 24-HS-864 is aligned to the spare.	0620/00	82	CH 4/5
112	24	LSHH	866	PAS MIST ELIM.	SUMP	66 in																																		**Time** delay. SP per UM-6-D-512. Input to PAS NORMAL relay.	0620/02	NA	CH 4
113	24	PDAH	867	PAS MIST ELIM.	DP AT CANDLES	**18 in wc**																																	X		0650/04	NA	CH 4
114	24	PDAHH	867	PAS MIST ELIM.	DP AT CANDLES	20 in wc			X	X					X																									**RCRA/MACT AWFCO LIC-38 /LIC(M)-41.**	0650/12	144	CH 4
115	24	FSL	901	PAS SCRUBBER	PURGE PERMISS	1200 scfm																																	X	**Time** delay. SP from instrument data sheet.	1620/14	NA	CH 4

UMCDF LIQUID INCINERATOR (LIC) #2 POLLUTION ABATEMENT SYSTEM (PAS) AND PAS FILTER SYSTEM (PFS)

UMCDF LIC 2 PAS/PFS — ALARM AND INTERLOCK MATRIX — **UMCDF LIC 2 PAS/PFS**

P&IDs: UM-1-D-547/1, UM-6-D-502, -511, -512, -517/2, -523, -525, and -529; PLC: ICS-CONR-119; INTERLOCK: I-22

CH 4

B8:010/

F00 - SPARE
F01 - SPARE
F02 - SPARE
F03 - SPARE
F04 - S/D AGENT PUMPS
F05 - LOCKOUT SECONDARY BURNER (NOTE 1)
F06 - LOCKOUT PRIMARY BURNER (NOTE 1)
F07 - INHIBIT FUEL OIL PURGE OF AGENT LINE
F10 - S/D SEC COMB AIR BLOWER
F11 - S/D PRI COMB AIR BLOWER
F12 - SPARE
F13 - CLOSE DECON/PRW VALVE
F14 - STOP DECON FEED/SWITCH TO PRW
F15 - STOP AGENT FEED
F16 - S/D SEC BURNER
F17 - S/D PRI BURNER
MALFUNCTION

B8:011/

P17 - S/D PFS-COOL-113A/213A FAN B (NOTE 1)
P16 - S/D PFS-COOL-113A/213A FAN A (NOTE 1)
P15 - S/D PFS-COOL-113B/213B FAN B (NOTE 1)
P14 - S/D PFS-COOL-113B/213B FAN A (NOTE 1)
P13 - OPEN QUENCH EMERG. PRW (NOTE 1)
P12 - S/D MIST ELIM WATER RETURN PMP
P11 - BKUP BRINE PUMP ON (NOTE 1)
P10 - BKUP CLEAN LIQ PUMP ON (NOTE 1)
P07 - SPARE
P06 - S/D BRINE PUMPS
P05 - S/D CLEAN LIQUOR PUMPS
P04 - S/D 1ST & 2ND STAGE ID FAN
P03 - SPARE
P02 - BYPASS CARBON FILTER (NOTE 1)
P01 - S/D IST STAGE ID FAN
P00 - S/D 2ND STAGE ID FAN
PREALARM

ITEM NUM	LIC 2 TAG NUMBER			DESCRIPTION	SET POINT	17	16	15	14	13	12	11	10	07	06	05	04	03	02	01	00	17	16	15	14	13	12	11	10	07	06	05	04	03	02	01	00		REMARKS	ALARM BIT B001:XX/XX	MASK WORD B8:XX	
116	24	FSLL	901	PAS SCRUBBER NFPA BURN S/D	650 scfm			X	X					X	X	X																							**Time** delay for stop feed. SP from instrument data sheet. BMS 3-P running interlock.	1620/16	88	CH 4
117	24	TSH	976A-F	1st STAGE ID FAN WINDING TEMP	**300°F**			**X**	**X**					**X**																									SP from vendor info. Alarm on high temp for any of 24-TSH-976A through F.	1220/10	**152**	CH 4/5
118	24	TSHH	976A-F	1st STAGE ID FAN WINDING TEMP	**312°F**																															X			SP from vendor info. Alarm on high-high temp for any of 24-TSHH-976A through F. UM-6-D-517 Note 14 specifies S/D 1st stage, except when running in emergency mode.	1221/16	110	CH 4/5
119	24	IAH	977	ID FAN 1ST STAGE MTR	**229 amp**			X	X					X																									**30-sec** delay on startup. SP per **UMCDF**.	1250/04	112	CH 4
120	24	XAH	978	1st STAGE ID FAN VIBRATION	0.25 in/sec			**X**	**X**					**X**																									See NOTE 5.	1251/00	**152**	CH 4/5
121	24	XSHH	978	1st STAGE ID FAN VIBRATION	0.5 in/sec																															X			S/D 1st stage, except when running in emergency mode. See NOTE 5.	1222/00	114	CH 4/5
122	24	XA	979	ID FAN 1ST STAGE MTR	MALF	X		X	X					X																							X		Start I-lock for 1st stage motor.	1261/11	118	
123	114	TAH	130	PFS-COOL-213A CL LIQ CLR	135°F																																	X	SP per RFI S-ALL-232.	3050/12	NA	
124	114	TAL	130	PFS-COOL-213A CL LIQ CLR	100°F																	X	X																SP per RFI S-ALL-232. Instant alarm, 120-sec delay for cooler S/D (see FAWB Note B-20). S/D fan motors of respective cooling unit.	3050/10	NA	
125	114	XSH	137	PFS-COOL-213A FAN B VIBRATION	See NOTE 6																																	X	**Time** delay (vendor info shows additional hardwired startup time delay relay)	3020/02	NA	CH 4
126	114	XSHH	138	PFS-COOL-213A FAN B VIBRATION	See NOTE 6																	X																	**Time** delay (vendor info shows additional hardwired startup time delay relay). S/D fan motor of respective cooling unit.	3020/12	NA	CH 4
127	114	XSH	139	PFS-COOL-213A FAN A VIBRATION	See NOTE 6																																	X	**Time** delay (vendor info shows additional hardwired startup time delay relay)	3020/00	NA	CH 4
128	114	XSHH	140	PFS-COOL-213A FAN A VIBRATION	See NOTE 6																		X																**Time** delay (vendor info shows additional hardwired startup time delay relay). S/D fan motor of respective cooling unit.	3020/10	NA	CH 4
129	114	SAH	141A	PFS-COOL-213A FAN B SPEED	**1750 rpm**																	X																	SP per **UMCDF**. S/D fan motors of respective cooling unit.	3051/02	NA	CH 4/5
130	114	SAH	142A	PFS-COOL-213A FAN A SPEED	**1750 rpm**																		X																SP per **UMCDF**. S/D fan motors of respective cooling unit.	3051/00	NA	CH 4/5

UMCDF LIQUID INCINERATOR (LIC) #2 POLLUTION ABATEMENT SYSTEM (PAS) AND PAS FILTER SYSTEM (PFS)

CH 4

UMCDF LIC 2 PAS/PFS — ALARM AND INTERLOCK MATRIX — **UMCDF LIC 2 PAS/PFS**

P&IDs: UM-1-D-547/1, UM-6-D-502, -511, -512, -517/2, -523, -525, and -529; PLC: ICS-CONR-119; INTERLOCK: I-22

B8:010/

F00 - SPARE
F01 - SPARE
F02 - SPARE
F03 - SPARE
F04 - S/D AGENT PUMPS
F05 - LOCKOUT SECONDARY BURNER (NOTE 1)
F06 - LOCKOUT PRIMARY BURNER (NOTE 1)
F07 - INHIBIT FUEL OIL PURGE OF AGENT LINE
F10 - S/D SEC COMB AIR BLOWER
F11 - S/D PRI COMB AIR BLOWER
F12 - SPARE
F13 - CLOSE DECON/PRW VALVE
F14 - STOP DECON FEED/SWITCH TO PRW
F15 - STOP AGENT FEED
F16 - S/D SEC BURNER
F17 - S/D PRI BURNER
MALFUNCTION

B8:011/

P17 - S/D PFS-COOL-113A/213A FAN B (NOTE 1)
P16 - S/D PFS-COOL-113A/213A FAN A (NOTE 1)
P15 - S/D PFS-COOL-113B/213B FAN B (NOTE 1)
P14 - S/D PFS-COOL-113B/213B FAN A (NOTE 1)
P13 - OPEN QUENCH EMERG. PRW (NOTE 1)
P12 - S/D MIST ELIM WATER RETURN PMP
P11 - BKUP BRINE PUMP ON (NOTE 1)
P10 - BKUP CLEAN LIQ PUMP ON (NOTE 1)
P07 - SPARE
P06 - S/D BRINE PUMPS
P05 - S/D CLEAN LIQUOR PUMPS
P04 - S/D 1ST & 2ND STAGE ID FAN
P03 - SPARE
P02 - BYPASS CARBON FILTER (NOTE 1)
P01 - S/D IST STAGE ID FAN
P00 - S/D 2ND STAGE ID FAN
PREALARM

ITEM NUM	LIC 2 TAG NUMBER			DESCRIPTION	SET POINT	17	16	15	14	13	12	11	10	07	06	05	04	03	02	01	00	17	16	15	14	13	12	11	10	07	06	05	04	03	02	01	00		REMARKS	ALARM BIT B001:XX/XX	MASK WORD B8:XX	
131	114	XA	146	PFS-COOL-213A FAN B	TROUBLE																	X																	Alarm generated by XSHH-138 or VFD in fault lockout. VFD internally configured to stop motor (see RFI C-PBCDF-002).	3021/02	NA	CH 5
132	114	XA	148	PFS-COOL-213A FAN A	TROUBLE																		X																Alarm generated by XSHH-140 or VFD in fault lockout. VFD internally configured to stop motor (see RFI C-PBCDF-002).	3021/00	NA	CH 5
133	114	PAL	170	CLEAN LIQ PUMP DISCH PRESS	50 psig																								X										**70** sec delay after pump startup. 3 sec delay before S/D of primary pump. SP per DSIC. Response per Oct 2000 ANCDF PAS/PFS review mtg.	1650/00	**NA**	CH 4
134	114	PALL	170	CLEAN LIQ PUMP DISCH PRESS	**15 psig**			X	X				X									X	X	X	X							X							RCRA/**MACT** AWFCO LIC 21 **/LIC(M)-24**. Ref. UMAP668LIC. SP per **UMCDF**. Response per Oct 2000 ANCDF PAS/PFS review mtg.	1650/04	142	CH 4
135	114	XA	173	CLEAN LIQ PUMP A (PFS-PUMP-234)	MALF	X																							X										Switchover to secondary pump on malfunction alarm when PFS-PUMP-234 is selected as primary.	1660/11	NA	
136	114	FISL	176	CLEAN LIQ PUMP A SEAL WATER	0.15 gpm																								**X**										**Time** delay. S/D PFS-PUMP-234 if selected as primary, which will cause 114-XA-173 to alarm. SP from instrument data sheet.	1620/04	NA	CH 4
137	114	XA	179	CLEAN LIQ PUMP B (PFS-PUMP-235)	MALF	X																							X										Switchover to secondary pump on malfunction alarm when PFS-PUMP-235 is selected as primary.	1662/11	NA	
138	114	FISL	182	CLEAN LIQ PUMP B SEAL WATER	0.15 gpm																								**X**										**Time** delay. S/D PFS-PUMP-235 if selected as primary, which will cause 114-XA-179 to alarm. SP from instrument data sheet.	1620/06	NA	CH 4
139	114	TAH	418	PFS-BURN-201 EXH TEMP	172°F																																X		SP per RFI S-ALL-241 R1. Instantaneous alarm.	3251/14	NA	
140	114	TAHH	418	PFS-BURN-201 EXH TEMP	170°F			X	X				X																										RCRA/**MACT** AWFCO LIC 35 **LIC(M)-36**. Rolling hourly average. Ref: UMAP668LIC.	**3251/00**	**44**	CH 4
141	114	TAL	418	PFS-BURN-201 EXH TEMP	135°F																																X		SP per RFI S-ALL-241 R1. Instantaneous alarm.	3251/16	NA	
142	114	TSHH	433	PFS-BURN-201 EXH TEMP	180°F			X	X				X																						X				RCRA/**MACT** AWFCO LIC 35 **/LIC(M)-36**. Bypass filters per Note 3 on UM-6-D-525. Ref: UMAP668LIC.	3220/10	**62**	CH 4
143	114	XA	434	PFS-BURN-201 EXH MOIST	> 10% DIFF																																X		Alarm when MIT-434A & B deviation exceeds 10% of upper range value.	3252/00	NA	
144	**114**	**MAH**	**434A**	**PFS-BURN-201 EXH REL HUM**	**60%RH**																																**X**		**Prealarm.**	**3251/10**	**NA**	CH 4

UMCDF LIQUID INCINERATOR (LIC) #2 POLLUTION ABATEMENT SYSTEM (PAS) AND PAS FILTER SYSTEM (PFS)

UMCDF LIC 2 PAS/PFS — ALARM AND INTERLOCK MATRIX — **UMCDF LIC 2 PAS/PFS**

P&IDs: UM-1-D-547/1, UM-6-D-502, -511, -512, -517/2, -523, -525, and -529; PLC: ICS-CONR-119; INTERLOCK: I-22

CH 4

B8:010/

F00 - SPARE
F01 - SPARE
F02 - SPARE
F03 - SPARE
F04 - S/D AGENT PUMPS
F05 - LOCKOUT SECONDARY BURNER (NOTE 1)
F06 - LOCKOUT PRIMARY BURNER (NOTE 1)
F07 - INHIBIT FUEL OIL PURGE OF AGENT LINE
F10 - S/D SEC COMB AIR BLOWER
F11 - S/D PRI COMB AIR BLOWER
F12 - SPARE
F13 - CLOSE DECON/PRW VALVE
F14 - STOP DECON FEED/SWITCH TO PRW
F15 - STOP AGENT FEED
F16 - S/D SEC BURNER
F17 - S/D PRI BURNER
MALFUNCTION

B8:011/

P17 - S/D PFS-COOL-113A/213A FAN B (NOTE 1)
P16 - S/D PFS-COOL-113A/213A FAN A (NOTE 1)
P15 - S/D PFS-COOL-113B/213B FAN B (NOTE 1)
P14 - S/D PFS-COOL-113B/213B FAN A (NOTE 1)
P13 - OPEN QUENCH EMERG. PRW (NOTE 1)
P12 - S/D MIST ELIM WATER RETURN PMP
P11 - BKUP BRINE PUMP ON (NOTE 1)
P10 - BKUP CLEAN LIQ PUMP ON (NOTE 1)
P07 - SPARE
P06 - S/D BRINE PUMPS
P05 - S/D CLEAN LIQUOR PUMPS
P04 - S/D 1ST & 2ND STAGE ID FAN
P03 - SPARE
P02 - BYPASS CARBON FILTER (NOTE 1)
P01 - S/D IST STAGE ID FAN
P00 - S/D 2ND STAGE ID FAN
PREALARM

ITEM NUM	LIC 2 TAG NUMBER	DESCRIPTION	SET POINT	17	16	15	14	13	12	11	10	07	06	05	04	03	02	01	00	17	16	15	14	13	12	11	10	07	06	05	04	03	02	01	00	PREALARM	REMARKS	ALARM BIT B001:XX/XX	MASK WORD B8:XX	
145	114 MSHH 434A	PFS-BURN-201 EXH REL HUM	80%RH			X	X					X																									RCRA/**MACT** AWFCO LIC 36 **/LIC(M)-37**. Instantaneous alarm. Ref: UMAP668LIC.	3220/00	**54**	CH 4
146	114 XS 434A	PFS-BURN-201 EXH MOIST	MALF	X		X	X					X																									On time delay. Remove instrument from ROHA calculation if it is the active unit.	3220/04	**54**	CH 4
147	114 MAHH 434**A/B**	PFS-BURN-201 EXH REL HUM	55%RH			X	X					X																									RCRA/**MACT** AWFCO LIC 36 **/LIC(M)-37**. Rolling hourly average. Ref: UMAP668LIC.	**3250/14**	**54**	CH 4/5
148	114 **MAH** 434B	PFS-BURN-201 EXH REL HUM	60%RH																																	X	Instantaneous alarm. Ref: UMAP668LIC.	**3251/12**	NA	CH 4/5
149	**114 MSHH 434B**	**PFS-BURN-201 EXH REL HUM**	**80%RH**			**X**	**X**					**X**																									**RCRA/MACT AWFCO LIC-36 /LIC(M)-37.**	**3220/02**	**54**	CH 4/5
150	114 XS 434B	PFS-BURN-201 EXH MOIST	MALF			X	X					X																									On time delay. Remove instrument from ROHA calculation if it is the active unit.	3220/06	**54**	CH 5
151	114 MAH 434	PFS-BURN-201 EXH REL HUM	52%RH																																	X	ROHA. Ref: UMAP668LIC.	**3250/16**	NA	CH 4
152	114 PDAH 436A	PFS-FILT-209 PREFILTER BANK	**1.2 in wc**																																	X	Prealarm per UMAP668LIC. SP per **UMCDF**.	3250/00	NA	CH 4
153	114 PDAHH 436A	PFS-FILT-209 PREFILTER BANK	**1.5 in wc**			X	X					X																									RCRA/**MACT** AWFCO LIC 33 **LIC(M)-34**. Ref. UMAP668LIC.	**3252/10**	**262**	CH 4
154	**114 PDAL 436A**	**PFS-FILT-209 PREFILTER BANK**	**0.2 in wc**																																	**X**		**3253/06**	**NA**	CH 4/5
155	**114 PDALL 436A**	**PFS-FILT-209 PREFILTER BANK**	**0 in wc**			**X**	**X**					**X**																									**MACT AWFCO LIC(M)-42.**	**3253/00**	**262**	CH 4/5
156	114 PDAH 436B	PFS-FILT-209 1st HEPA FILT BK	**2.7 in wc**																																	X	Prealarm per UMAP668LIC. SP per **UMCDF**.	3250/02	NA	CH 4
157	114 PDAHH 436B	PFS-FILT-209 1st HEPA FILT BK	**3.0 in wc**			X	X					X																									RCRA/**MACT** AWFCO LIC 34 **/LIC(M)-35**. Ref. UMAP668LIC.	**3253/14**	**262**	CH 4/5
158	**114 PDAL 436B**	**PFS-FILT-209 1st HEPA FILT BK**	**0.2 in wc**																																	**X**		**3253/10**	**NA**	CH 4/5
159	**114 PDALL 436B**	**PFS-FILT-209 1st HEPA FILT BK**	**0 in wc**			**X**	**X**					**X**																									**MACT AWFCO LIC(M)-43.**	**3253/02**	**262**	CH 4/5
160	114 PDAH 436C	PFS-FILT-209 1st CARBON FILT	**1.2 in wc**																																	X	SP per **UMCDF**. Measures dP across primary bed in first carbon bank.	3250/04	NA	CH 4
161	114 PDAH 436D	PFS-FILT-209 2nd CARBON FILT	**1.2 in wc**																																	X	SP per **UMCDF**. Measures dP across primary bed in second carbon bank.	3250/06	NA	CH 4
162	114 PDAH 436E	PFS-FILT-209 3rd CARBON FILT	**1.2 in wc**																																	X	Carbon bank SP per **UMCDF**. Note: # of carbon banks changed after RFI release. Measures dP across primary bed in third carbon bank.	**3250/10**	NA	CH 4
163	114 PDAH 436F	PFS-FILT-209 4th CARBON FILT	**1.2 in wc**																																	X	Carbon bank SP per **UMCDF**. Note: # of carbon banks changed after RFI release. Measures dP across primary bed in fourth carbon bank.	**3250/12**	NA	CH 4

UMCDF LIQUID INCINERATOR (LIC) #2 POLLUTION ABATEMENT SYSTEM (PAS) AND PAS FILTER SYSTEM (PFS)

CH 4

UMCDF LIC 2 PAS/PFS — ALARM AND INTERLOCK MATRIX — **UMCDF LIC 2 PAS/PFS**

P&IDs: UM-1-D-547/1, UM-6-D-502, -511, -512, -517/2, -523, -525, and -529; PLC: ICS-CONR-119; INTERLOCK: I-22

B8:010/

17	16	15	14	13	12	11	10	07	06	05	04	03	02	01	00
F00 - SPARE	F01 - SPARE	F02 - SPARE	F03 - SPARE	F04 - S/D AGENT PUMPS	F05 - LOCKOUT SECONDARY BURNER (NOTE 1)	F06 - LOCKOUT PRIMARY BURNER (NOTE 1)	F07 - INHIBIT FUEL OIL PURGE OF AGENT LINE	F10 - S/D SEC COMB AIR BLOWER	F11 - S/D PRI COMB AIR BLOWER	F12 - SPARE	F13 - CLOSE DECON/PRW VALVE	F14 - STOP DECON FEED/SWITCH TO PRW	F15 - STOP AGENT FEED	F16 - S/D SEC BURNER	F17 - S/D PRI BURNER

B8:011/

17	16	15	14	13	12	11	10	07	06	05	04	03	02	01	00
P17 - S/D PFS-COOL-113A/213A FAN B (NOTE 1)	P16 - S/D PFS-COOL-113A/213A FAN A (NOTE 1)	P15 - S/D PFS-COOL-113B/213B FAN B (NOTE 1)	P14 - S/D PFS-COOL-113B/213B FAN A (NOTE 1)	P13 - OPEN QUENCH EMERG. PRW (NOTE 1)	P12 - S/D MIST ELIM WATER RETURN PMP	P11 - BKUP BRINE PUMP ON (NOTE 1)	P10 - BKUP CLEAN LIQ PUMP ON (NOTE 1)	P07 - SPARE	P06 - S/D BRINE PUMPS	P05 - S/D CLEAN LIQUOR PUMPS	P04 - S/D 1ST & 2ND STAGE ID FAN	P03 - SPARE	P02 - BYPASS CARBON FILTER (NOTE 1)	P01 - S/D IST STAGE ID FAN	P00 - S/D 2ND STAGE ID FAN

MALFUNCTION — PREALARM

ITEM NUM	LIC 2 TAG NUMBER			DESCRIPTION	SET POINT	17	16	15	14	13	12	11	10	07	06	05	04	03	02	01	00	17	16	15	14	13	12	11	10	07	06	05	04	03	02	01	00	PREALARM	REMARKS	ALARM BIT B001:XX/XX	MASK WORD B8:XX	
164	114	PDAH	436G	PFS-FILT-209 CARBON FILTER BANKS 1, 2, 3, 4 SECOND BED	1.2 in wc																																		X	Carbon bank SP per UMCDF. Note: # of carbon banks changed after RFI release. Measures dP across second bed of all 4 carbon banks.	3251/02	NA	CH 4
165	114	PDAH	436H	PFS-FILT-209 2nd HEPA FILT BK	2.7 in wc																																		X	Prealarm per UMUF889PFS. HEPA SP per UMCDF. Note: # of carbon banks & notation changed after RFI release.	3251/04	NA	CH 4
166	114	PDAHH	436H	PFS-FILT-209 2nd HEPA FILT BK	3.0 in wc			X	X				X																											RCRA/MACT AWFCO LIC-34 /LIC(M)-35. Ref: UMUF889PFS.	3253/16	262	CH 4/5
167	114	PDAL	436H	PFS-FILT-209 2nd HEPA FILT BK	0.2 in wc																																	X		3253/12		CH 4/5
168	114	PDALL	436H	PFS-FILT-209 2nd HEPA FILT BK	0 in wc			X	X				X																											MACT AWFCO LIC(M)-43.	3253/04	262	CH 4/5
169	114	PDAH	436I	PFS-FILT-209 OVERALL DP	16 in wc																																	X	Overall dP SP per RFI S-ALL-232. Note: # of carbon banks & notation changed after RFI release.	3251/06	NA	CH 4
170	114	PDAHH	487A/B/H	PFS-FILT-113 ON LINE	DICO			X	X				X																											RCRA AWFCO LIC-33, 34 and MACT AWFCO LIC(M)-34, 35	B4:34/12	266	CH 5
171	114	PDALL	487A/B/H	PFS-FILT-113 ON LINE	DICO			X	X				X																											MACT AWFCO LIC(M)-42, 43.	B4:34/12	266	CH 5
172	114	ZS	450B	PFS-FILT-209 BYPASS DAMPER	NOT CLOSED			X	X				X																											RCRA AWFCO LIC 37. Ref. UMAP668LIC. Agent feed permissive per UM-6-D-525 Note 4.	3261/14	258	CH 4
173	114	PDAH	617	PFS-COOL-213B CLN LIQ CL	32 psid																																	X	SP per UMCDF.	3050/06	NA	CH 4/5
174	114	PDAL	617	PFS-COOL-213B CLN LIQ CLR	14 psid																																	X	SP per RFI S-ALL-232.	3050/04	NA	CH 5
175	114	TAH	632	PFS-COOL-213B CLN LIQ CLR	135°F																																	X	SP per RFI S-ALL-232.	3050/16	NA	
176	114	TAL	632	PFS-COOL-213B CLN LIQ CLR	100°F																			X	X														SP per RFI S-ALL-232. Instant alarm, 120-sec delay for cooler S/D (see FAWB Note B-20). S/D fan motors of respective cooling unit.	3050/14	NA	
177	114	PDAH	633	PFS-COOL-213A CLN LIQ CLR	32 psid																																	X	SP per RFI S-ALL-232.	3050/02	NA	CH 5
178	114	PDAL	633	PFS-COOL-213A CLN LIQ CLR	14 psid																																	X	SP per RFI S-ALL-232.	3050/00	NA	CH 5
179	114	XSH	639	PFS-COOL-213B FAN B VIBRATION	See NOTE 6																																	X	(vendor info shows additional hardwired startup time delay relay). S/D fan motor of respective cooling unit.	3020/06	NA	CH 4/5
180	114	XSHH	640	PFS-COOL-213B FAN B VIBRATION	See NOTE 6																			X															(vendor info shows additional hardwired startup time delay relay). S/D fan motor of respective cooling unit.	3020/16	NA	CH 4/5
181	114	XSH	641	PFS-COOL-213B FAN A VIBRATION	See NOTE 6																																	X	(vendor info shows additional hardwired startup time delay relay)	3020/04	NA	CH 4/5

UMCDF LIQUID INCINERATOR (LIC) #2 POLLUTION ABATEMENT SYSTEM (PAS) AND PAS FILTER SYSTEM (PFS)

CH 4

UMCDF LIC 2 PAS/PFS — ALARM AND INTERLOCK MATRIX — **UMCDF LIC 2 PAS/PFS**

P&IDs: UM-1-D-547/1, UM-6-D-502, -511, -512, -517/2, -523, -525, and -529; PLC: ICS-CONR-119; INTERLOCK: I-22

B8:010/

Bit	Description
17	F00 - SPARE
16	F01 - SPARE
15	F02 - SPARE
14	F03 - SPARE
13	F04 - S/D AGENT PUMPS
12	F05 - LOCKOUT SECONDARY BURNER (NOTE 1)
11	F06 - LOCKOUT PRIMARY BURNER (NOTE 1)
10	F07 - INHIBIT FUEL OIL PURGE OF AGENT LINE
07	F10 - S/D SEC COMB AIR BLOWER
06	F11 - S/D PRI COMB AIR BLOWER
05	F12 - SPARE
04	F13 - CLOSE DECON/PRW VALVE
03	F14 - STOP DECON FEED/SWITCH TO PRW
02	F15 - STOP AGENT FEED
01	F16 - S/D SEC BURNER
00	F17 - S/D PRI BURNER

B8:011/

Bit	Description
17	MALFUNCTION
16	P17 - S/D PFS-COOL-113A/213A FAN B (NOTE 1)
15	P16 - S/D PFS-COOL-113A/213A FAN A (NOTE 1)
14	P15 - S/D PFS-COOL-113B/213B FAN B (NOTE 1)
13	P14 - S/D PFS-COOL-113B/213B FAN A (NOTE 1)
12	P13 - OPEN QUENCH EMERG. PRW (NOTE 1)
11	P12 - S/D MIST ELIM WATER RETURN PMP
10	P11 - BKUP BRINE PUMP ON (NOTE 1)
07	P10 - BKUP CLEAN LIQ PUMP ON (NOTE 1)
06	P07 - SPARE
05	P06 - S/D BRINE PUMPS
04	P05 - S/D CLEAN LIQUOR PUMPS
03	P04 - S/D 1ST & 2ND STAGE ID FAN
02	P03 - SPARE
01	P02 - BYPASS CARBON FILTER (NOTE 1)
00	P01 - S/D IST STAGE ID FAN
	P00 - S/D 2ND STAGE ID FAN
	PREALARM

ITEM NUM	LIC 2 TAG NUMBER	DESCRIPTION	SET POINT	17	16	15	14	13	12	11	10	07	06	05	04	03	02	01	00	17	16	15	14	13	12	11	10	07	06	05	04	03	02	01	00	REMARKS	ALARM BIT B001:XX/XX	MASK WORD B8:XX	
182	114 XSHH 642	PFS-COOL-213B FAN A VIBRATION	See NOTE 6																				X													(vendor info shows additional hardwired startup time delay relay)	3020/14	NA	CH 4/5
183	114 SAH 643A	PFS-COOL-213B FAN B SPEED	**1750 rpm**																			X														SP per **UMCDF**. S/D fan motor of respective cooling unit.	3051/06	NA	CH 4/5
184	114 SAH 644A	PFS-COOL-213B FAN A SPEED	**1750 rpm**																				X													SP per **UMCDF**. S/D fan motor of respective cooling unit.	3051/04	NA	CH 4/5
185	114 XA 648	PFS-COOL-213B FAN B	TROUBLE																			X														Alarm generated by XSHH-640 or VFD in fault lockout. VFD internally configured to stop motor (see RFI C-PBCDF-002).	3021/06	NA	CH 5
186	114 XA 650	PFS-COOL-213B FAN A	TROUBLE																				X													Alarm generated by XSHH-642 or VFD in fault lockout. VFD internally configured to stop motor (see RFI C-PBCDF-002).	3021/04	NA	CH 5
187	114 **XA** **783**	PFS-BURN-201 BURNER LOCKOUT	LOCKOUT			X	X				X																									Stop feed. (stop feed shown on UM-6-D-525).	**3221/00**	**250**	CH 4/5
188	114 **ZX** 783	PFS-BURN-201 BURNER TROUBLE	TROUBLE																																X	Prealarm.	**3220/16**	NA	CH 4/5
189	114 TISH 875	PFS-BURN-201 EXH TEMP	168°F																																X	On time delay. SP per DSIC.	3220/12	NA	
190	114 TSHH 875	PFS-BURN-201 EXH TEMP	176°F																																	On time delay. S/D PFS-BURN-201. SP per DSIC.	3220/14	NA	
191	MON ACAM 129 223 225	ACAMS COMMON STACK	SEE NOTE 4			X	X				X																									RCRA AWFCO LIC 18. Stop feed for DFS, LICs, MPF. DICO from ICS-CONR-112. Ref. UMAP668LIC.	B4:31/00	140	
192	MON ACAM 129 223 225	ACAMS COMMON STACK	MALF	X		X	X				X																									RCRA AWFCO LIC 18. Stop feed for DFS, LICs, MPF. DICO from ICS-CONR-112. Ref. UMAP668LIC. See NOTE 4.	B4:31/00	140	
193	MON ACAM 129 223 225	ACAMS COMMON STACK	OFFLINE			X	X				X																									RCRA AWFCO LIC 18. Stop feed for DFS, LICs, MPF. DICO from ICS-CONR-112. Ref. UMAP668LIC. See NOTE 4.	B4:31/00	140	
194	MON ACAM 129 223 225	ACAMS COMMON STACK	NOT STAGGERED			X	X				X																									RCRA AWFCO LIC 18. Stop feed for DFS, LICs, MPF. DICO from ICS-CONR-112. Ref. UMAP668LIC. See NOTE 4.	B4:31/00	140	
195	MON ACAM 134	ACAMS LIC PAS **(ID Fan)**	SEE NOTE 4			X	X				X																									RCRA AWFCO LIC 17. Ref. UMAP668LIC.	**2020/06**	90	CH 5
196	MON ACAM 134	ACAMS LIC PAS **(ID Fan)**	MALF	X		X	X				X																									RCRA AWFCO LIC 17. Ref. UMAP668LIC. See NOTE 4.	**2020/06**	90	CH 5
197	MON ACAM 134	ACAMS LIC PAS	OFFLINE			X	X				X																									RCRA AWFCO LIC 17. Ref. UMAP668LIC. See NOTE 4.	**2020/06**	90	CH 5
198	**MON ACAM 354**	**ACAMS U/S OF PFS**	**SEE NOTE 4**			**X**	**X**				**X**																									**RCRA AWFCO LIC 17. Ref. UMAP668LIC.**	**2020/16**	**90**	CH 4/5

UMCDF LIQUID INCINERATOR (LIC) #2 POLLUTION ABATEMENT SYSTEM (PAS) AND PAS FILTER SYSTEM (PFS)

CH 4

UMCDF LIC 2 PAS/PFS — ALARM AND INTERLOCK MATRIX — **UMCDF LIC 2 PAS/PFS**

P&IDs: UM-1-D-547/1, UM-6-D-502, -511, -512, -517/2, -523, -525, and -529; PLC: ICS-CONR-119; INTERLOCK: I-22

F00 - SPARE
F01 - SPARE
F02 - SPARE
F03 - SPARE
F04 - S/D AGENT PUMPS
F05 - LOCKOUT SECONDARY BURNER (NOTE 1)
F06 - LOCKOUT PRIMARY BURNER (NOTE 1)
F07 - INHIBIT FUEL OIL PURGE OF AGENT LINE
F10 - S/D SEC COMB AIR BLOWER
F11 - S/D PRI COMB AIR BLOWER
F12 - SPARE
F13 - CLOSE DECON/PRW VALVE
F14 - STOP DECON FEED/SWITCH TO PRW
F15 - STOP AGENT FEED
F16 - S/D SEC BURNER
F17 - S/D PRI BURNER
MALFUNCTION

P17 - S/D PFS-COOL-113A/213A FAN B (NOTE 1)
P16 - S/D PFS-COOL-113A/213A FAN A (NOTE 1)
P15 - S/D PFS-COOL-113B/213B FAN B (NOTE 1)
P14 - S/D PFS-COOL-113B/213B FAN A (NOTE 1)
P13 - OPEN QUENCH EMERG. PRW (NOTE 1)
P12 - S/D MIST ELIM WATER RETURN PMP
P11 - BKUP BRINE PUMP ON (NOTE 1)
P10 - BKUP CLEAN LIQ PUMP ON (NOTE 1)
P07 - SPARE
P06 - S/D BRINE PUMPS
P05 - S/D CLEAN LIQUOR PUMPS
P04 - S/D 1ST & 2ND STAGE ID FAN
P03 - SPARE
P02 - BYPASS CARBON FILTER (NOTE 1)
P01 - S/D IST STAGE ID FAN
P00 - S/D 2ND STAGE ID FAN
PREALARM

ITEM NUM	LIC 2 TAG NUMBER	DESCRIPTION	SET POINT	B8:010/ 17	16	15	14	13	12	11	10	07	06	05	04	03	02	01	00	B8:011/ 17	16	15	14	13	12	11	10	07	06	05	04	03	02	01	00	REMARKS	ALARM BIT B001:XX/XX	MASK WORD B8:XX	
199	**MON ACAM 134**	**ACAMS U/S OF PFS**	**MALF**	**X**			**X**	**X**				**X**																								**RCRA AWFCO LIC 17. Ref. UMAP668LIC. See NOTE 4.**	**2020/16**	**90**	CH 5
200	**MON ACAM 134**	**ACAMS U/S OF PFS**	**OFFLINE**				**X**	**X**				**X**																								**RCRA AWFCO LIC 17. Ref. UMAP668LIC. See NOTE 4.**	**2020/16**	**90**	CH 5
201		BRA TANKS LVL HI-HI / UNAVAILABLE	DICO				X	X				X																								RCRA AWFCO LIC 19. See BRA FAWB for tag #s and setpoints.	B4:23/01	210	
202		LIC#2 PAS/PFS NORMAL	NOT NORMAL				X	X				X																									B601/00	**260**	CH 4

NOTE 1: F05, F06, P02, P10, P11, P13, P14, P15, P16, and P17 responses are not part of the deathwish relay. These responses are included as column headings for presentation clarity.
NOTE 2: The UMCDF CEMS alarm configuration is based on ECP UMAC908MON, R2 and conversations with UMCDF SC personnel. ECPs UMAP668LIC, UMUF866LIC, and UMSF973LIC were also used as references for RCRA and MACT AWFCOs. Setpoints may be modified based on trial burn results.
NOTE 3: 24-LSHHH-819 additional interlocks: 1) close 24-XV-807, 2) close 24-XV-798 and inhibit timer activation, 3) close 24-XY-834B/D. Also when controllers are in AUTO: 1) close 24-LV-824, 2) close 24-LV-818, 3) close 24-AV-832, 4) close 24-AV-831.
NOTE 4: Allowable stack concentration (ASC) for chemical agent are (mg/m3) : GB= 0.0003, H/HD/HT= 0.03, and VX=0.0003. RCRA AWFCO setpoint is 1 ASC. In addition, a RCRA AWFCO is initiated if: 1) Less than two ACAMS are online monitoring the exhaust gas , 2) sampling periods for online ACAMS are not staggered, 3) online ACAMS is in malfunction while in the sampling mode.
NOTE 5: PAS exhaust blower vibration alarms reflect the current design. Per RFI C-ANCDF-005, the blower foundation design requires that the foundation vibration be < 1 mil double amplitude. This requirement was the basis for recommended setpoints in RFI S-ALL-0232. The vibration alarm setpoints may be changed, or new alarms added, to meet the foundation vibration design limits.
NOTE 6: After the Oct 2000 AN PAS/PFS review meeting, the DSIC investigated the clean liquor air cooler vibration alarm setpoints. They found that the Murphy vibration switches are set by turning an uncalibrated screw. Specific vibration units could not be determined. The high vibration switch is set by turning the screw 1/4 turn past its start-up trip point and the high-high switch is set by turning the screw 1/2 turn past its start-up trip point.
NOTE 7: Item number 49 is going to be changed to PDALL-108A and have a prealarm (PDAL-108A). CH 4
NOTE 8: Unit of record can not switch if either the CO or O2 CEMS is in: 1) 10 minute delay after hand switch closure; 2) XS Alarm; 3) In "Calibrate" mode (Zero, Span 1 and 2, and Blowback). CH 4

UMCDF METAL PARTS FURNACE (MPF) POLLUTION ABATEMENT SYSTEM (PAS) AND PAS FILTER SYSTEM (PFS)

UMCDF MPF PAS/PFS

ALARM AND INTERLOCK MATRIX

UMCDF MPF PAS/PFS

P&IDs: UM-1-D-528, UM-6-D-504, -505, -523, -526, -527 and -528; PLC: ICS-CONR-113; INTERLOCK: I-8

B8:010/

17	16	15	14	13	12	11	10	07	06	05	04	03	02	01	00
F00 - SPARE	F01 - SPARE	F02 - S/D COOLING CONVEYOR	F03 - S/D UNLOAD CONVEYOR	F04 - STOP ZONE 1 TIMER	F05 - STOP ZONE 2 TIMER	F06 - STOP ZONE 3 TIMER	F07 - S/D DISCHARGE AIRLOCK CONVEYOR	F10 - S/D ZONE 3 CONVEYOR	F11 - S/D ZONE 2 CONVEYOR	F12 - S/D ZONE 1 CONVEYOR	F13 - S/D CHARGE AIRLOCK CONVEYOR	F14 - S/D COMBUSTION AIR BLOWER	F15 - S/D RESPECTIVE MPF AFTERBURNER	F16 - S/D RESPECTIVE MPF BURNER	F17 - STOP FEED

B8:011/

17	16	15	14	13	12	11	10	07	06	05	04	03	02	01	00
P17 - S/D PFS-COOL-114A FAN B (NOTE 1)	P16 - S/D PFS-COOL-114A FAN A (NOTE 1)	P15 - S/D PFS-COOL-114B FAN B (NOTE 1)	P14 - S/D PFS-COOL-114B FAN A (NOTE 1)	P13 - OPEN QUENCH EMERG. PRW (NOTE 1)	P12 - S/D WATER RETURN PUMP	P11 - BKUP BRINE PUMP ON (NOTE 1)	P10 - BKUP CLEAN LIQ PUMP ON (NOTE 1)	P07 - SPARE	P06 - S/D BRINE PUMPS	P05 - S/D CLEAN LIQUOR PUMPS	P04 - S/D 1ST & 2ND STAGE ID FAN	P03 - SPARE	P02 - BYPASS CARBON FILTER (NOTE 1)	P01 - S/D IST STAGE ID FAN	P00 - S/D 2ND STAGE ID FAN

MALFUNCTION / **PREALARM**

ITEM NUM	TAG NUMBER			DESCRIPTION	SET POINT	MALFUNCTION	PREALARM	REMARKS	ALARM BIT B001:XX/XX	MASK WORD B8:XX	
1	14	AAH	082	AFB EXHAUST O2 ANALYZER	**14% O2**	X		See NOTE 2.	**1050/14**	**512**	CH 3
2	14	AAL	082	AFB EXHAUST O2 ANALYZER	**4.8% O2**	X		See NOTE 2.	**1050/16**	**512**	CH 3
3	**14**	**XS**	**082**	**MALFUNCTION**	**MALF**	X		**5 sec delay**	**1021/00**	**400**	CH 3
4	24	PDAH	053	MPF/DFS SPARE MIST ELIM DP AT CANDLES	15 in wc		X		5250/06	NA	
5	24	PDAHH	053	MPF/DFS SPARE MIST ELIM DP AT CANDLES	20 in wc	X		**RCRA AWFCO MPF-36. MACT AWFCO MPF(M)-41**	**5250/10**	**416**	CH 3
6	24	LSHH	059	MPF/DFS SPARE MIST ELIM SUMP	66 in			3 sec delay. SP per UM-6-D-527.	5220/02	NA	
7	24	LSLL	061	MPF/DFS SPARE MIST ELIM SUMP	8 in		B8:011/12 X	3 sec delay. SP per UM-6-D-527. Alarm active when 24-HS-293 selected to MPF spare mist eliminator. Hardwired S/D of pump needs to be disabled when 24-HS-293 is aligned to the MPF. (Note 24-HS-293 is not shown on P&ID).	5220/00	438	
8	24	LAH	067	MPF/DFS SPARE MIST ELIM SUMP	**18 in**		X	SP from UM-6-D-527. Start water return pump (see FAWB Note B-17).	5250/02	NA	CH 3
9	24	LAHH	067	MPF/DFS SPARE MIST ELIM SUMP	**20 in**		X	SP per UM-6-D-527.	5250/04	NA	CH 3
10	24	LAL	067	MPF/DFS SPARE MIST ELIM SUMP	10 in		X	SP per UM-6-D-527.	5250/00	NA	
11	24	TAH	188	CLEAN LIQUOR TO SCRUBBER	**135°F**		X		1652/14	NA	CH 3
12	24	TAHH	188	CLEAN LIQUOR TO SCRUBBER	143°F	X		SP & response per RFI S-ALL-232.	1652/16	**430**	CH 3
13	24	TAL	188	CLEAN LIQUOR TO SCRUBBER	100°F		X	SP per RFI S-ALL-232.	1652/12	NA	
14	24	FAH	190	PAS-SCRB-101 CAUSTIC ADDITION	1.7 gpm		X	SP per RFI S-ALL-232. Note: AN modified SP	1652/10	NA	
15	24	DAH	216	PAS-SCRB-101 BRINE DENSITY	**1.12 sg**		X		1850/16	**NA**	CH 3
16	24	DAHH	216	PAS-SCRB-101 BRINE DENSITY	**1.16 sg**	X		**RCRA AWFCO MPF-23. MACT AWFCO MPF(M)-24**	1851/02	326	CH 3
17	24	DAHH	216A	PAS-SCRB-101 BRINE DENSITY	**1.16 sg**	X		MACT AWFCO MPF(M)-7. Based on 12-hr rolling avg. Ref. UMSF992MPF.	**1851/14**	**326**	CH 3
18	24	FAL	217	PAS-TOWR-102 BRINE	60 gpm		X		1450/00	NA	
19	24	FAL	218	BRINE TO MPF VENTURI SCRBR	155 gpm		X	5 sec delay. Prealarm added per UMAP818MPF. SP per RFI C-ANCDF-003R1.	**1850/02**	NA	CH 3
20	24	FALL	218	BRINE TO MPF VENTURI SCRBR	147 gpm	X		RCRA AWFCO MPF 22 **and MACT MPF(M)-22**. Ref: UMAP818MPF & RFI C-ANCDF-003R1.	**1851/06**	302	CH 3

UMCDF METAL PARTS FURNACE (MPF) POLLUTION ABATEMENT SYSTEM (PAS) AND PAS FILTER SYSTEM (PFS)

UMCDF MPF PAS/PFS

ALARM AND INTERLOCK MATRIX

UMCDF MPF PAS/PFS

P&IDs: UM-1-D-528, UM-6-D-504, -505, -523, -526, -527 and -528; PLC: ICS-CONR-113; INTERLOCK: I-8

B8:010/

17	16	15	14	13	12	11	10	07	06	05	04	03	02	01	00
F00 - SPARE	F01 - SPARE	F02 - S/D COOLING CONVEYOR	F03 - S/D UNLOAD CONVEYOR	F04 - STOP ZONE 1 TIMER	F05 - STOP ZONE 2 TIMER	F06 - STOP ZONE 3 TIMER	F07 - S/D DISCHARGE AIRLOCK CONVEYOR	F10 - S/D ZONE 3 CONVEYOR	F11 - S/D ZONE 2 CONVEYOR	F12 - S/D ZONE 1 CONVEYOR	F13 - S/D CHARGE AIRLOCK CONVEYOR	F14 - S/D COMBUSTION AIR BLOWER	F15 - S/D RESPECTIVE MPF AFTERBURNER	F16 - S/D RESPECTIVE MPF BURNER	F17 - STOP FEED

B8:011/

17	16	15	14	13	12	11	10	07	06	05	04	03	02	01	00
P17 - S/D PFS-COOL-114A FAN B (NOTE 1)	P16 - S/D PFS-COOL-114A FAN A (NOTE 1)	P15 - S/D PFS-COOL-114B FAN B (NOTE 1)	P14 - S/D PFS-COOL-114B FAN A (NOTE 1)	P13 - OPEN QUENCH EMERG. PRW (NOTE 1)	P12 - S/D WATER RETURN PUMP	P11 - BKUP BRINE PUMP ON (NOTE 1)	P10 - BKUP CLEAN LIQ PUMP ON (NOTE 1)	P07 - SPARE	P06 - S/D BRINE PUMPS	P05 - S/D CLEAN LIQUOR PUMPS	P04 - S/D 1ST & 2ND STAGE ID FAN	P03 - SPARE	P02 - BYPASS CARBON FILTER (NOTE 1)	P01 - S/D IST STAGE ID FAN	P00 - S/D 2ND STAGE ID FAN

ITEM NUM	TAG NUMBER			DESCRIPTION		SET POINT	MALFUNCTION	B8:010/17	B8:010/16	B8:010/15	B8:010/14	B8:010/13	B8:010/12	B8:010/11	B8:010/10	B8:010/07	B8:010/06	B8:010/05	B8:010/04	B8:010/03	B8:010/02	B8:010/01	B8:010/00	B8:011/17	B8:011/16	B8:011/15	B8:011/14	B8:011/13	B8:011/12	B8:011/11	B8:011/10	B8:011/07	B8:011/06	B8:011/05	B8:011/04	B8:011/03	B8:011/02	B8:011/01	B8:011/00	PREALARM	REMARKS	ALARM BIT B001:XX/XX	MASK WORD B8:XX	
21	24	FALL	218A	BRINE TO MPF	VENTURI SCRBR	117 gpm		X																																MACT AWFCO MPF(M)-**23**. ROHA. Ref. UMSF992MPF.	**1852/00**	**302**	CH 3
22	24	PDAH	222	PAS-SEPA-101	VENTURI SCRUB	SP+10 in wc																																	X	SP=setpoint entered in controller by operator	1850/06	NA	
23	24	PDAL	222	PAS-SEPA-101	VENTURI SCRUB	25 in wc																																	X		1850/04	NA	
24	24	PDALL	222	PAS-SEPA-101	VENTURI SCRUB	20 in wc		X																																RCRA AWFCO MPF 14. Ref: UMAP818MPF. **MACT AWFCO MPF(M)-14.**	1851/00	318	CH 3
25	24	PDALL	222A	PAS-SEPA-101	VENTURI SCRUB	**20 in wc**		X																																MACT AWFCO MPF(M)-**15**. ROHA. Ref. UMSF992MPF.	**1852/04**	**318**	CH 3
26	24	TSHH	223	PAS-TOWR-102	OVERHEAD	225 F		X																			X													RCRA AWFCO MPF 07. Ref: UMAP818MPF & UMSF992MPF. See FAWB Note B-7.	1420/00	**304**	CH 3
27	24	FSL	223	PAS-TOWR-102	PROCESS WATER	10 gpm																																	**X**	3 sec delay. SP from instrument data sheet. Active only when 24-TV-223 is open.	1420/02	NA	CH 3
28	24	AAH	224	PAS QUENCH	BRINE pH	9.5 pH																																	X		1850/12	NA	
29	24	AAL	224	PAS QUENCH	BRINE pH	**5.5 pH**																																	X		**1850/10**	NA	CH 3
30	24	AALL	224	PAS QUENCH	BRINE pH	**4.5 pH**		X																																Alarm is at TOCDF and is in Jan 2000 ANCDF code, but is not shown on UM-6-D-504.	**1852/06**	324	CH 3
31	**24**	**AAX**	**224**	**24-AIT-224 A & B maintenance mode**				**X**																																**A & B in Maint Mode**	**1870/13 1871/13**	**350**	CH 3
32	24	AALL	224**A/B**	PAS QUENCH	BRINE pH	4.5 pH		X																																MACT AWFCO MPF(M)-**40**. ROHA. Ref. UMSF992MPF. Alarm active only when 24-AE-224**A/B** is online. See FAWB Note B-16.	**1851/12**	**324**	CH 3
33	**24**	**AIT**	**224A/B**	**BRINE pH**	**OUT OF TOL**	**+/- 0.5 pH deviation**																																	**X**	**A & B probes indication difference**	**1820/06**	**NA**	CH 3
34	24	PDAH	225	PAS-SCRB-101	PACKED BED	6 in wc																																	X		1651/10	NA	
35	24	PDAL	225A	PAS-SCRB-101	PACKED BED	**0.6 in wc**																																			**1652/06**	**NA**	CH 3
36	**24**	**PDALL**	**225A**	**PAS-SCRB-101**	**PACKED BED**	**0.4 in wc**		**X**																																**MACT AWFCO MPF(M)-39 ROHA**	**1653/12**	**310**	CH 3
37	24	FSL	226	PAS-SCRB-101	PROCESS WATER	20 gpm																																		3 sec delay. SP from instrument data sheet. Active only when 24-XV-226 is energized.	1620/10	NA	
38	24	XA	228	PAS-PUMP-102	QUENCH BRINE	MALF	X																						X										**X**	Switchover to secondary pump on malf. alarm when PAS-PUMP-102 is selected as primary.	1860/11	NA	CH 3

UMCDF METAL PARTS FURNACE (MPF) POLLUTION ABATEMENT SYSTEM (PAS) AND PAS FILTER SYSTEM (PFS)

UMCDF MPF PAS/PFS

ALARM AND INTERLOCK MATRIX

UMCDF MPF PAS/PFS

P&IDs: UM-1-D-528, UM-6-D-504, -505, -523, -526, -527 and -528; PLC: ICS-CONR-113; INTERLOCK: I-8

B8:010/

17	16	15	14	13	12	11	10	07	06	05	04	03	02	01	00
F00 - SPARE	F01 - SPARE	F02 - S/D COOLING CONVEYOR	F03 - S/D UNLOAD CONVEYOR	F04 - STOP ZONE 1 TIMER	F05 - STOP ZONE 2 TIMER	F06 - STOP ZONE 3 TIMER	F07 - S/D DISCHARGE AIRLOCK CONVEYOR	F10 - S/D ZONE 3 CONVEYOR	F11 - S/D ZONE 2 CONVEYOR	F12 - S/D ZONE 1 CONVEYOR	F13 - S/D CHARGE AIRLOCK CONVEYOR	F14 - S/D COMBUSTION AIR BLOWER	F15 - S/D RESPECTIVE MPF AFTERBURNER	F16 - S/D RESPECTIVE MPF BURNER	F17 - STOP FEED

B8:011/

17	16	15	14	13	12	11	10	07	06	05	04	03	02	01	00
P17 - S/D PFS-COOL-114A FAN B (NOTE 1)	P16 - S/D PFS-COOL-114A FAN A (NOTE 1)	P15 - S/D PFS-COOL-114B FAN B (NOTE 1)	P14 - S/D PFS-COOL-114B FAN A (NOTE 1)	P13 - OPEN QUENCH EMERG. PRW (NOTE 1)	P12 - S/D WATER RETURN PUMP	P11 - BKUP BRINE PUMP ON (NOTE 1)	P10 - BKUP CLEAN LIQ PUMP ON (NOTE 1)	P07 - SPARE	P06 - S/D BRINE PUMPS	P05 - S/D CLEAN LIQUOR PUMPS	P04 - S/D 1ST & 2ND STAGE ID FAN	P03 - SPARE	P02 - BYPASS CARBON FILTER (NOTE 1)	P01 - S/D IST STAGE ID FAN	P00 - S/D 2ND STAGE ID FAN

ITEM NUM	TAG NUMBER			DESCRIPTION		SET POINT	MALFUNCTION	B8:010/17	B8:010/16	B8:010/15	B8:010/14	B8:010/13	B8:010/12	B8:010/11	B8:010/10	B8:010/07	B8:010/06	B8:010/05	B8:010/04	B8:010/03	B8:010/02	B8:010/01	B8:010/00	B8:011/17	B8:011/16	B8:011/15	B8:011/14	B8:011/13	B8:011/12	B8:011/11	B8:011/10	B8:011/07	B8:011/06	B8:011/05	B8:011/04	B8:011/03	B8:011/02	B8:011/01	B8:011/00	PREALARM	REMARKS	ALARM BIT B001:XX/XX	MASK WORD B8:XX	
39	24	FISL	231	PAS-PUMP-102	SEAL WATER	0.15 gpm																								X										3 sec delay. S/D PAS-PUMP-102 if selected as primary, which will cause 24-XA-228 to alarm. SP from instrument data sheet.	1820/00	NA	CH 3
40	24	PAL	233	PAS-PUMP-102/3	BRINE DISCH	**95 psig**																								X										SP per DSIC. Switchover to secondary pump on low pressure alarm when primary is running. **10 sec delay.**	1850/00	NA	CH 3
41	24	PALL	233	PAS-PUMP-102/3	BRINE DISCH	40 psig		X																																24-PALL-233 not shown on UM-6-D-504. **10 sec delay.**	1851/04	538	CH 3
42	24	XA	235	PAS-PUMP-103	QUENCH BRINE	MALF	X																							X										Switchover to secondary pump on malf. alarm when PAS-PUMP-103 is selected as primary.	1862/11	NA	
43	24	FISL	238	PAS-PUMP-103	SEAL WATER	0.15 gpm																								**X**										3 sec delay. S/D PAS-PUMP-103 if selected as primary, which will cause 24-XA-235 to alarm. SP from instrument data sheet.	1820/02	NA	CH 3
44	24	LAH	242	PAS-TOWR-102	SUMP	**4.0 in**																																	X		1450/04	NA	CH 3
45	24	LAHH	242	PAS-TOWR-102	SUMP	8.0 in		X	X	X																														SP from P&ID. Shuts off brine spray to quench tower and **closes 24-TV-223**. Input to PAS NORMAL relay.	1450/02	**330**	CH 3
46	24	LAL	243	PAS-SCRB-101 CLEAN LIQUOR SUMP		24 in																																	X	SP from P&ID (14 ft 0 in. minus 12 ft 0 in. offset). SP is 30 in. above bottom of chimney tray well point. Alarm response per Oct 2000 ANCDF PAS/PFS mtg.	1650/12	**NA**	CH 3
47	24	LSHHH	244	PAS-SCRB-101	SUMP	**66 in**		X	X	X																		X												3 sec delay. Input to PAS NORMAL relay (see FAWB Note B-19). See NOTE 3 for additional interlocks.	1620/02	**444**	CH 3
48	24	LAH	245	PAS-SCRB-101	SUMP	**54 in**																																	X	Prealarm per ANCDF Oct 2000 PAS/PFS mtg.	1650/16	**NA**	CH 3
49	24	LAL	245	PAS-SCRB-101	SUMP	**30 in**																																	X	Prealarm per ANCDF Oct 2000 PAS/PFS mtg.	1650/14	**NA**	CH 3
50	24	LSHH	245	PAS-SCRB-101	SUMP	**60 in**		X																																RCRA AWFCO MPF 08. Measured from bottom **LIT tap**. Ref: UMAP818MPF. Open 24-DV-216 (deenergize 24-LY-216). **LIT tap is 24" above bottom tangent.**	1621/12	**300**	CH 3

UMCDF METAL PARTS FURNACE (MPF) POLLUTION ABATEMENT SYSTEM (PAS) AND PAS FILTER SYSTEM (PFS)

UMCDF MPF PAS/PFS

ALARM AND INTERLOCK MATRIX

UMCDF MPF PAS/PFS

P&IDs: UM-1-D-528, UM-6-D-504, -505, -523, -526, -527 and -528; PLC: ICS-CONR-113; INTERLOCK: I-8

B8:010/

17	16	15	14	13	12	11	10	07	06	05	04	03	02	01	00
F00 - SPARE	F01 - SPARE	F02 - S/D COOLING CONVEYOR	F03 - S/D UNLOAD CONVEYOR	F04 - STOP ZONE 1 TIMER	F05 - STOP ZONE 2 TIMER	F06 - STOP ZONE 3 TIMER	F07 - S/D DISCHARGE AIRLOCK CONVEYOR	F10 - S/D ZONE 3 CONVEYOR	F11 - S/D ZONE 2 CONVEYOR	F12 - S/D ZONE 1 CONVEYOR	F13 - S/D CHARGE AIRLOCK CONVEYOR	F14 - S/D COMBUSTION AIR BLOWER	F15 - S/D RESPECTIVE MPF AFTERBURNER	F16 - S/D RESPECTIVE MPF BURNER	F17 - STOP FEED

B8:011/

17	16	15	14	13	12	11	10	07	06	05	04	03	02	01	00
P17 - S/D PFS-COOL-114A FAN B (NOTE 1)	P16 - S/D PFS-COOL-114A FAN A (NOTE 1)	P15 - S/D PFS-COOL-114B FAN B (NOTE 1)	P14 - S/D PFS-COOL-114B FAN A (NOTE 1)	P13 - OPEN QUENCH EMERG. PRW (NOTE 1)	P12 - S/D WATER RETURN PUMP	P11 - BKUP BRINE PUMP ON (NOTE 1)	P10 - BKUP CLEAN LIQ PUMP ON (NOTE 1)	P07 - SPARE	P06 - S/D BRINE PUMPS	P05 - S/D CLEAN LIQUOR PUMPS	P04 - S/D 1ST & 2ND STAGE ID FAN	P03 - SPARE	P02 - BYPASS CARBON FILTER (NOTE 1)	P01 - S/D IST STAGE ID FAN	P00 - S/D 2ND STAGE ID FAN

ITEM NUM	TAG NUMBER			DESCRIPTION		SET POINT	MALFUNCTION	PREALARM	REMARKS	ALARM BIT B001:XX/XX	MASK WORD B8:XX	
51	24	LSLL	245	PAS-SCRB-101	SUMP	**24 in**			RCRA AWFCO MPF 09. Measured from bottom **LIT tap**. Ref: UMAP818MPF. Close 24-DV-216 (24-LY-216 energized and drive 24-DY-216 to close). **LIT tap is 24" above bottom tangent.**	1621/14	**300**	CH 3
52	24	LSLLL	246	PAS-SCRB-101	SCRUBBER SUMP	**18 in**			3 sec delay. Input to PAS NORMAL relay (see FAWB Note B-19).	1620/00	320	CH 3
53	24	AAH	247	PAS SCRUBBER	CLEAN LIQ pH	9.5 pH	X			1651/02	NA	
54	24	AAL	247	PAS SCRUBBER	CLEAN LIQ pH	**7.7 pH**	X			1652/04	NA	CH 3
55	24	AALL	247	PAS SCRUBBER	CLEAN LIQ pH	7.5 pH			RCRA AWFCO MPF 20. Ref: UMSF992MPF. See FAWB Note B-16. **MACT AWFCO MPF(M)-19.**	1651/00	**502**	CH 3
56	24	AALL	247**A/B**	PAS SCRUBBER	CLEAN LIQ pH	**7.5 pH**			MACT AWFCO MPF(M)-**20**. ROHA. Ref. UMSF992MPF. Alarm active only when 24-AE-247**A/B** is online. See FAWB Note B-16.	**1652/02**	**502**	CH 3
57	**24**	**AIT**	**247A/B**	**CLEAN LIQUOR**	**pH OUT OF TOL**	**+/- 0.5 pH deviation**		**X**	**A & B probes indication difference**	**1651/16**	**NA**	CH 3
58	24	FAL	248	CLEAN LIQUOR	TO SCRUBBER	**660 gpm**		X	**SP for shakedown phase 1. 10 sec delay after pump startup**	1650/10	NA	CH 3
59	24	FALL	248	CLEAN LIQUOR	TO SCRUBBER	640 gpm			RCRA AWFCO MPF 15. Ref: UMAP818MPF. **MACT AWFCO MPF(M)-16.**	1650/06	306	CH 3
60	24	FALL	248A	CLEAN LIQUOR	TO SCRUBBER	**640 gpm**			MACT AWFCO MPF(M)-**17**. ROHA. Ref. UMSF992MPF.	**1653/00**	306	CH 3
61	24	DAH	249	CLEAN LIQUOR	DENSITY	**SP+0.03**		X		1651/04	NA	CH 3
62	24	DAHH	249	CLEAN LIQUOR	DENSITY	1.04 sg	X			1651/12	**480**	CH 3
63	24	DAHH	249A	CLEAN LIQUOR	DENSITY	**1.04 sg**	X		MACT AWFCO MPF(M)-**38**. Based on 12-hr rolling avg. Ref. UMSF992MPF.	**1653/06**	**480**	CH 3
64	24	PDAH	265	BRINE TO QUENCH	FILTER	10.0 psid		X	**As of 1/6/03, P&ID UM-6-D-504 indicates this filter and PDIT as abandoned in place. It is unclear if this abandonment is in error. Until clear, this alarm is being maintained.**	1450/06	NA	CH 3
65	24	PDAH	266	PAS-SCRB-101	MIST ELIM D.P.	2 in wc		X		1651/06	NA	

UMCDF METAL PARTS FURNACE (MPF) POLLUTION ABATEMENT SYSTEM (PAS) AND PAS FILTER SYSTEM (PFS)

UMCDF MPF PAS/PFS

ALARM AND INTERLOCK MATRIX

UMCDF MPF PAS/PFS

P&IDs: UM-1-D-528, UM-6-D-504, -505, -523, -526, -527 and -528; PLC: ICS-CONR-113; INTERLOCK: I-8

B8:010/

17	16	15	14	13	12	11	10	07	06	05	04	03	02	01	00
F00 - SPARE	F01 - SPARE	F02 - S/D COOLING CONVEYOR	F03 - S/D UNLOAD CONVEYOR	F04 - STOP ZONE 1 TIMER	F05 - STOP ZONE 2 TIMER	F06 - STOP ZONE 3 TIMER	F07 - S/D DISCHARGE AIRLOCK CONVEYOR	F10 - S/D ZONE 3 CONVEYOR	F11 - S/D ZONE 2 CONVEYOR	F12 - S/D ZONE 1 CONVEYOR	F13 - S/D CHARGE AIRLOCK CONVEYOR	F14 - S/D COMBUSTION AIR BLOWER	F15 - S/D RESPECTIVE MPF AFTERBURNER	F16 - S/D RESPECTIVE MPF BURNER	F17 - STOP FEED

B8:011/

17	16	15	14	13	12	11	10	07	06	05	04	03	02	01	00
P17 - S/D PFS-COOL-114A FAN B (NOTE 1)	P16 - S/D PFS-COOL-114A FAN A (NOTE 1)	P15 - S/D PFS-COOL-114B FAN B (NOTE 1)	P14 - S/D PFS-COOL-114B FAN A (NOTE 1)	P13 - OPEN QUENCH EMERG. PRW (NOTE 1)	P12 - S/D WATER RETURN PUMP	P11 - BKUP BRINE PUMP ON (NOTE 1)	P10 - BKUP CLEAN LIQ PUMP ON (NOTE 1)	P07 - SPARE	P06 - S/D BRINE PUMPS	P05 - S/D CLEAN LIQUOR PUMPS	P04 - S/D 1ST & 2ND STAGE ID FAN	P03 - SPARE	P02 - BYPASS CARBON FILTER (NOTE 1)	P01 - S/D IST STAGE ID FAN	P00 - S/D 2ND STAGE ID FAN

ITEM NUM	TAG NUMBER			DESCRIPTION		SET POINT	MALFUNCTION	B8:010/ 17	16	15	14	13	12	11	10	07	06	05	04	03	02	01	00	B8:011/ 17	16	15	14	13	12	11	10	07	06	05	04	03	02	01	00	PREALARM	REMARKS	ALARM BIT B001:XX/XX	MASK WORD B8:XX	
66	24	AAL/H	273	PAS-DMIS-105	pH out of range	>9.0 or <6.5 pH																																		X		0602/00	NA	CH 3
67	24	AIT	273	PAS-DMIS-105	pH alarm	>=10.0 or <=5.5 pH																																		X	Alarm if pH >=10.0 or if pH <=5.5. Alarm is active regardless of PAS-DMIS-105 status. Close 24-LV-293 if PAS-DMIS-105 is in service for MPF.	0602/00	NA	CH 3
68	24	XA	285	2nd STAGE ID FAN	TROUBLE	Trouble		X															X																		Alarm response per RFI C-ANCDF-002. Trouble alarm initiated by ASD motor thermal overload which stops the motor.	1224/00	482	CH 3
69	24	SAH	285A	2nd STAGE ID FAN	SPEED	1790 rpm		X																																X	SP per RFI S-ALL-232.	1253/02	482	CH 3
70	24	XA	287	1st & 2nd STAGE ID FAN		NOT RUNNING		X			X																															1263/13 1261/13	544	CH 3
71	24	XA	288	PAS-BLOW-102	2ND STAGE MTR	MALF	X	X															X																		Start I-lock for 2nd stage motor.	1263/11	490	
72	24	PDAH	291	PAS-DMIS-103	DP AT CANDLES	15 in wc																																		X		0650/04	NA	
73	24	PDAHH	291	PAS-DMIS-103	DP AT CANDLES	20 in wc		X																																	RCRA AWFCO MPF-36. MACT AWFCO MPF(M)-41	0650/12	310	CH 3
74	24	LSHH	292	PAS MIST ELIM.	SUMP	66 in																																		X	3 sec delay. SP from UM-6-D-505. Input to PAS NORMAL relay.	0620/02	NA	CH 3
75	24	LAH	293	PAS MIST ELIM.	SUMP	18 in																																			SP from UM-6-D-505. Start PAS-PUMP-137 (see FAWB Note B-17).	0650/02	NA	
76	24	LAHH	293	PAS MIST ELIM.	SUMP	20 in																																		X	SP from UM-6-D-505.	0650/10	NA	CH 3
77	24	LAL	293	PAS MIST ELIM.	SUMP	10 in																																		X	SP from UM-6-D-505.	0650/00	NA	
78	24	LSLL	294	PAS MIST ELIM.	SUMP	8 in																						X													3 sec delay. SP from UM-6-D-505. Alarm active when 24-HS-293 selected to MPF mist eliminator. Hardwired S/D of pump needs to be disabled when 24-HS-293 is aligned to the spare (Note 24-HS-293 is not shown on P&ID).	0620/00	438	
79	24	XAH	306	PAS-BLOW-102	2ND STAGE VIB	0.25 in/sec		X																																	3 sec delay. See NOTE 5.	1251/10	548	
80	24	XSHH	306	PAS-BLOW-102	2ND STAGE VIB	0.5 in/sec																	X																		3 sec delay. S/D 2nd stage, except when running in emergency mode. See NOTE 5.	1220/06	448	

UMCDF METAL PARTS FURNACE (MPF) POLLUTION ABATEMENT SYSTEM (PAS) AND PAS FILTER SYSTEM (PFS)

UMCDF MPF PAS/PFS

ALARM AND INTERLOCK MATRIX

UMCDF MPF PAS/PFS

P&IDs: UM-1-D-528, UM-6-D-504, -505, -523, -526, -527 and -528; PLC: ICS-CONR-113; INTERLOCK: I-8

B8:010/

17	16	15	14	13	12	11	10	07	06	05	04	03	02	01	00
F00 - SPARE	F01 - SPARE	F02 - S/D COOLING CONVEYOR	F03 - S/D UNLOAD CONVEYOR	F04 - STOP ZONE 1 TIMER	F05 - STOP ZONE 2 TIMER	F06 - STOP ZONE 3 TIMER	F07 - S/D DISCHARGE AIRLOCK CONVEYOR	F10 - S/D ZONE 3 CONVEYOR	F11 - S/D ZONE 2 CONVEYOR	F12 - S/D ZONE 1 CONVEYOR	F13 - S/D CHARGE AIRLOCK CONVEYOR	F14 - S/D COMBUSTION AIR BLOWER	F15 - S/D RESPECTIVE MPF AFTERBURNER	F16 - S/D RESPECTIVE MPF BURNER	F17 - STOP FEED

B8:011/

17	16	15	14	13	12	11	10	07	06	05	04	03	02	01	00
P17 - S/D PFS-COOL-114A FAN B (NOTE 1)	P16 - S/D PFS-COOL-114A FAN A (NOTE 1)	P15 - S/D PFS-COOL-114B FAN B (NOTE 1)	P14 - S/D PFS-COOL-114B FAN A (NOTE 1)	P13 - OPEN QUENCH EMERG. PRW (NOTE 1)	P12 - S/D WATER RETURN PUMP	P11 - BKUP BRINE PUMP ON (NOTE 1)	P10 - BKUP CLEAN LIQ PUMP ON (NOTE 1)	P07 - SPARE	P06 - S/D BRINE PUMPS	P05 - S/D CLEAN LIQUOR PUMPS	P04 - S/D 1ST & 2ND STAGE ID FAN	P03 - SPARE	P02 - BYPASS CARBON FILTER (NOTE 1)	P01 - S/D IST STAGE ID FAN	P00 - S/D 2ND STAGE ID FAN

ITEM NUM	TAG NUMBER			DESCRIPTION		SET POINT	MALFUNCTION	PREALARM	REMARKS	ALARM BIT B001:XX/XX	MASK WORD B8:XX	
81	24	TSH	307A-F	2nd STAGE ID FAN	WINDING TEMP	320°F			SP from vendor info. Alarm on high temp for any of 24-TSH-307A through F. Stop feed per UM-6-D-505 Note 19.	1220/00	446	
82	24	TSHH	307A-F	2nd STAGE ID FAN	WINDING TEMP	329°F			SP from vendor info. Alarm on high-high temp for any of 24-TSHH-307A through F. UM-6-D-505 Note 21 specifies S/D 2nd stage, except when running in emergency mode.	1222/10	**448**	CH 3
83	24	PDAH	315	PAS-SEPA-101	BRINE FILTER	10.0 psid		X		1850/14	NA	
84	24	XA	321	BRINE/CLEAN LIQ.	DENSITY	MALF	X		Alarm for MALF signal from 24-XS-216 or 24-XS-249	**1622/00**	NA	CH 3
85	24	TSH	446A/B	1st STAGE ID FAN	BEARING TEMP	160°F			SP from vendor info. Stop feed per UM-6-D-505 Note 19.	**1251/06**	**546**	CH 3
86	24	TSHH	446A/B	1st STAGE ID FAN	BEARING TEMP	200°F			5 sec delay. SP from vendor info. UM-6-D-505 Note 21 specifies S/D 1st stage, except when running in emergency mode.	1221/10	**550**	CH 3
87	24	TSH	447A/B	2nd STAGE ID FAN	BEARING TEMP	160°F			SP from vendor info. Stop feed per UM-6-D-505 Note 19.	**1251/12**	**484**	CH 3
88	24	TSHH	447A/B	2nd STAGE ID FAN	BEARING TEMP	200°F			5 sec delay. SP from vendor info. UM-6-D-505 Note 21 specifies S/D 2nd stage, except when running in emergency mode.	1221/12	**552**	CH 3
89	24	IAH	500	PAS-BLOW-102	2ND STAGE MTR	**299 amp**		**X**	2-min delay on startup.	1250/02	492	CH 3
90	24	TAH	509	PAS-TOWR-102	QNCH TWR OVHD	200°F		X	(see FAWB Note B-7)	1450/10	**NA**	CH 3
91	24	TSHHH	510	PAS-TOWR-102	QNCH TWR OVHD	250°F			SP from UMAC817ICS. Input to PAS NORMAL relay. See FAWB Note B-7.	1420/10	316	
92	24	LSLL	513	PAS-SCRB-101 CLEAN LIQUOR SUMP		3 in			3 sec delay. SP from P&ID (14 ft 0 in. minus 12 ft 0 in. offset). SP is 9 in. above bottom of chimney tray well point. Alarm response per Oct 2000 ANCDF PAS/PFS mtg.	1620/12	338	
93	24	PDAH	582	PAS-SCRB-101	CLEAN LIQ FIL	10.0 psid		X		1650/02	NA	
94	24	FSL	666	PAS-SCRB-101	PURGE PERMISS	1500 scfm		X	Min flow for purge; 3 sec delay. SP from instrument data sheet.	1620/16	NA	

UMCDF METAL PARTS FURNACE (MPF) POLLUTION ABATEMENT SYSTEM (PAS) AND PAS FILTER SYSTEM (PFS)

UMCDF MPF PAS/PFS

ALARM AND INTERLOCK MATRIX

UMCDF MPF PAS/PFS

P&IDs: UM-1-D-528, UM-6-D-504, -505, -523, -526, -527 and -528; PLC: ICS-CONR-113; INTERLOCK: I-8

B8:010/

17	16	15	14	13	12	11	10	07	06	05	04	03	02	01	00
F00 - SPARE	F01 - SPARE	F02 - S/D COOLING CONVEYOR	F03 - S/D UNLOAD CONVEYOR	F04 - STOP ZONE 1 TIMER	F05 - STOP ZONE 2 TIMER	F06 - STOP ZONE 3 TIMER	F07 - S/D DISCHARGE AIRLOCK CONVEYOR	F10 - S/D ZONE 3 CONVEYOR	F11 - S/D ZONE 2 CONVEYOR	F12 - S/D ZONE 1 CONVEYOR	F13 - S/D CHARGE AIRLOCK CONVEYOR	F14 - S/D COMBUSTION AIR BLOWER	F15 - S/D RESPECTIVE MPF AFTERBURNER	F16 - S/D RESPECTIVE MPF BURNER	F17 - STOP FEED

B8:011/

17	16	15	14	13	12	11	10	07	06	05	04	03	02	01	00
P17 - S/D PFS-COOL-114A FAN B (NOTE 1)	P16 - S/D PFS-COOL-114A FAN A (NOTE 1)	P15 - S/D PFS-COOL-114B FAN B (NOTE 1)	P14 - S/D PFS-COOL-114B FAN A (NOTE 1)	P13 - OPEN QUENCH EMERG. PRW (NOTE 1)	P12 - S/D WATER RETURN PUMP	P11 - BKUP BRINE PUMP ON (NOTE 1)	P10 - BKUP CLEAN LIQ PUMP ON (NOTE 1)	P07 - SPARE	P06 - S/D BRINE PUMPS	P05 - S/D CLEAN LIQUOR PUMPS	P04 - S/D 1ST & 2ND STAGE ID FAN	P03 - SPARE	P02 - BYPASS CARBON FILTER (NOTE 1)	P01 - S/D IST STAGE ID FAN	P00 - S/D 2ND STAGE ID FAN

MALFUNCTION | **PREALARM**

ITEM NUM	TAG NUMBER			DESCRIPTION		SET POINT	MALFUNCTION	PREALARM	REMARKS	ALARM BIT B001:XX/XX	MASK WORD B8:XX	
95	24	FSLL	666	PAS-SCRB-101	NFPA BURN S/D	900 scfm			3 sec delay for stop feed. SP from instrument data sheet. BMS 3-P running interlock.	1620/14	486	
96	**24**	**AAL/H**	**668**	**PAS-DMIS-103**	**pH out of range**	**>=9.0 or <=6.5 pH**		**X**		**0602/00**	**NA**	CH 3
97	**24**	**AIT**	**668**	**PAS-DMIS-103**	**pH alarm**	**>=10.0 or <=5.5 pH**		**X**	**Alarm if pH >=10.0 or if pH <=5.5. Alarm is active regardless of PAS-DMIS-103 status. Close 24-LV-293 if PAS-DMIS-103 is in service for MPF.**	**0602/00**	**NA**	CH 3
98	24	AAH	669A	MPF EXH GAS	CO TO STACK	160 ppm		X	Instantaneous alarm. Corrected to 7% O2 dry basis. See NOTE 2.	**4453/12**	NA	CH 3
99	**24**	**AAHH**	**669A**	**MPF EXH GAS**	**CO TO STACK**	**170 ppm**		**X**	**Instantaneous alarm. Corrected to 7% O2 dry basis. See NOTE 2.**	**4453/14**	**NA**	CH 3
100	**24**	**MAH**	**669A**	**MPF EXH GAS STACK CO MOISTURE**		**38%**			**Switch racks on high humidity. If second unit also alarms on high humidity, stop feed. See NOTE 2.**	**1220/16**	**432**	CH 3
101	24	XS	669 A	MPF EXH GAS	CO TO STACK	MALF	X		Stop feed on malf. alarm only if 24-AIT-669B is also in malf. or in "calibrate" mode. See NOTE 2. **5 sec delay.**	**1220/04**	**432**	CH 3
102	24	HS	669A/669B	BOTH MPF PAS CO ANALYZERS IN CAL		In Calib			See NOTE 2. **Stop feed with both analyzers in calibration.**	**1223/02**	**456**	CH 3
103	24	AAH	669B	MPF EXH GAS	CO TO STACK	160 ppm		X	Instantaneous alarm. Corrected to 7% O2 dry basis. See NOTE 2.	**4454/00**	NA	CH 3
104	**24**	**AAHH**	**669B**	**MPF EXH GAS**	**CO TO STACK**	**170 ppm**		**X**	**Instantaneous alarm. Corrected to 7% O2 dry basis. See NOTE 2.**	**4453/16**	**NA**	CH 3
105	**24**	**MAH**	**669B**	**MPF EXH GAS STACK CO MOISTURE**		**38%**			**Switch racks on high humidity. If second unit also alarms on high humidity, stop feed. See NOTE 2.**	**1221/00**	**432**	CH 3
106	24	XS	669B	MPF EXH GAS	CO TO STACK	MALF	X		Stop feed on malf. alarm only if 24-AIT-669A is also in malf. or in "calibrate" mode. See NOTE 2. **5 sec delay.**	**1021/02**	**432**	CH 3
107	24	AAH	669 C	MPF EXH GAS	CO TO STACK	90 ppm		X	ROHA. Corrected to 7% O2 dry basis. See NOTE 2.	**4454/04**	NA	CH 3

UMCDF METAL PARTS FURNACE (MPF) POLLUTION ABATEMENT SYSTEM (PAS) AND PAS FILTER SYSTEM (PFS)

UMCDF MPF PAS/PFS

ALARM AND INTERLOCK MATRIX

UMCDF MPF PAS/PFS

P&IDs: UM-1-D-528, UM-6-D-504, -505, -523, -526, -527 and -528; PLC: ICS-CONR-113; INTERLOCK: I-8

B8:010/

17	16	15	14	13	12	11	10	07	06	05	04	03	02	01	00
F00 - SPARE	F01 - SPARE	F02 - S/D COOLING CONVEYOR	F03 - S/D UNLOAD CONVEYOR	F04 - STOP ZONE 1 TIMER	F05 - STOP ZONE 2 TIMER	F06 - STOP ZONE 3 TIMER	F07 - S/D DISCHARGE AIRLOCK CONVEYOR	F10 - S/D ZONE 3 CONVEYOR	F11 - S/D ZONE 2 CONVEYOR	F12 - S/D ZONE 1 CONVEYOR	F13 - S/D CHARGE AIRLOCK CONVEYOR	F14 - S/D COMBUSTION AIR BLOWER	F15 - S/D RESPECTIVE MPF AFTERBURNER	F16 - S/D RESPECTIVE MPF BURNER	F17 - STOP FEED

B8:011/

17	16	15	14	13	12	11	10	07	06	05	04	03	02	01	00
P17 - S/D PFS-COOL-114A FAN B (NOTE 1)	P16 - S/D PFS-COOL-114A FAN A (NOTE 1)	P15 - S/D PFS-COOL-114B FAN B (NOTE 1)	P14 - S/D PFS-COOL-114B FAN A (NOTE 1)	P13 - OPEN QUENCH EMERG. PRW (NOTE 1)	P12 - S/D WATER RETURN PUMP	P11 - BKUP BRINE PUMP ON (NOTE 1)	P10 - BKUP CLEAN LIQ PUMP ON (NOTE 1)	P07 - SPARE	P06 - S/D BRINE PUMPS	P05 - S/D CLEAN LIQUOR PUMPS	P04 - S/D 1ST & 2ND STAGE ID FAN	P03 - SPARE	P02 - BYPASS CARBON FILTER (NOTE 1)	P01 - S/D IST STAGE ID FAN	P00 - S/D 2ND STAGE ID FAN

ITEM NUM	TAG NUMBER			DESCRIPTION		SET POINT	MALFUNCTION	17	16	15	14	13	12	11	10	07	06	05	04	03	02	01	00	17	16	15	14	13	12	11	10	07	06	05	04	03	02	01	00	PREALARM	REMARKS	ALARM BIT B001:XX/XX	MASK WORD B8:XX	
108	24	AAHH	669 C	MPF EXH GAS	CO TO STACK	100 ppm		X																																	RCRA AWFCO MPF 13 and MACT AWFCO MPF(M)-**13**. ROHA. Corrected to 7% O2 dry basis. See NOTE 2.	**4454/02**	**400**	CH 3
109	**24**	**ADH**	**669**	**MPF EXH GAS CO DIFFERENTIAL**		**12 ppm**																																		**X**		**1250/06**	**NA**	CH 3
110	24	AAH	670A	MPF EXH GAS	TO STACK 02	12% O2																																		X	Corrected to dry basis. See NOTE 2.	**1252/14**	NA	CH 3
111	24	AAHH	670A	MPF EXH GAS	TO STACK 02	**14% O2**		X																																	RCRA AWFCO MPF 25. Corrected to dry basis. See NOTE 2. **MACT AWFCO MPF(M)-28.**	**1252/16**	**400**	CH 3
112	24	AAL	670A	MPF EXH GAS	TO STACK 02	6% O2																																		X	Corrected to dry basis. See NOTE 2.	**1252/12**	NA	CH 3
113	24	AALL	670A	MPF EXH GAS	TO STACK 02	4.8% O2		X																																	RCRA AWFCO MPF 26. Corrected to dry basis. See NOTE 2. **MACT AWFCO MPF(M)-29.**	**1252/10**	**400**	CH 3
114	24	XS	670A	MPF EXH GAS	TO STACK 02	MALF	X	X																																	Stop feed on malf. alarm only if 24-AIT-670B is also in malf. or in "calibrate" mode. See NOTE 2.	1220/12	**432**	CH 3
115	24	HS	670A/670B	BOTH MPF PAS O2 ANALYZERS IN CAL		In Calib		X																																	See NOTE 2. **Stop feed with both analyzers in calibration.**	**1222/06**	**520**	CH 3
116	24	AAH	670B	MPF EXH GAS	TO STACK 02	12% O2																																		X	Corrected to dry basis. See NOTE 2.	**1252/04**	NA	CH 3
117	24	AAHH	670B	MPF EXH GAS	TO STACK 02	**14% O2**		X																																	RCRA AWFCO MPF 25. Corrected to dry basis. See NOTE 2. **MACT AWFCO MPF(M)-28.**	**1252/06**	**400**	CH 3
118	24	AAL	670B	MPF EXH GAS	TO STACK 02	6% O2																																		X	Corrected to dry basis. See NOTE 2.	**1252/02**	NA	CH 3
119	24	AALL	670B	MPF EXH GAS	TO STACK 02	4.8% O2		X																																	RCRA AWFCO MPF 26. Corrected to dry basis. See NOTE 2. **MACT AWFCO MPF(M)-29.**	**1252/00**	**400**	CH 3
120	24	XS	670B	MPF EXH GAS	TO STACK 02	MALF	X	X																																	Stop feed on malf. alarm only if 24-AIT-670A is also in malf. or in "calibrate" mode. See NOTE 2.	**1221/02**	**432**	CH 3
121	**24**	**ADH**	**670**	**MPF EXH GAS O2 DIFFERENTIAL**		**1%**																																		**X**		**1250/14**	**NA**	CH 3
122	24	FISL	760	PAS-PUMP-137	WTR RTN PUMP	0.15 gpm																						X													3 sec delay. SP from instrument data sheet.	0620/12	**378**	CH 3
123	24	XA	778	1st STAGE ID FAN	TROUBLE	Trouble		X																														X			Alarm response per RFI C-ANCDF-002. Trouble alarm initiated by ASD motor thermal overload which stops the motor. **Shut down if not in emergency mode**	1223/16	**494**	CH 3
124	24	SAH	778A	1st STAGE ID FAN	SPEED	**1790 rpm**		X																																		1253/00	**494**	CH 3
125	24	XA	910	PAS-PUMP-134 RECVD WTR FEED PMP		MALF	X																																		Switchover to backup pump on malf. alarm when PAS-PUMP-134 is selected as primary.	4060/11	NA	

UMCDF METAL PARTS FURNACE (MPF) POLLUTION ABATEMENT SYSTEM (PAS) AND PAS FILTER SYSTEM (PFS)

UMCDF MPF PAS/PFS

ALARM AND INTERLOCK MATRIX

UMCDF MPF PAS/PFS

P&IDs: UM-1-D-528, UM-6-D-504, -505, -523, -526, -527 and -528; PLC: ICS-CONR-113; INTERLOCK: I-8

B8:010/

17	16	15	14	13	12	11	10	07	06	05	04	03	02	01	00
F00 - SPARE	F01 - SPARE	F02 - S/D COOLING CONVEYOR	F03 - S/D UNLOAD CONVEYOR	F04 - STOP ZONE 1 TIMER	F05 - STOP ZONE 2 TIMER	F06 - STOP ZONE 3 TIMER	F07 - S/D DISCHARGE AIRLOCK CONVEYOR	F10 - S/D ZONE 3 CONVEYOR	F11 - S/D ZONE 2 CONVEYOR	F12 - S/D ZONE 1 CONVEYOR	F13 - S/D CHARGE AIRLOCK CONVEYOR	F14 - S/D COMBUSTION AIR BLOWER	F15 - S/D RESPECTIVE MPF AFTERBURNER	F16 - S/D RESPECTIVE MPF BURNER	F17 - STOP FEED

B8:011/

17	16	15	14	13	12	11	10	07	06	05	04	03	02	01	00	
P17 - S/D PFS-COOL-114A FAN B (NOTE 1)	P16 - S/D PFS-COOL-114A FAN A (NOTE 1)	P15 - S/D PFS-COOL-114B FAN B (NOTE 1)	P14 - S/D PFS-COOL-114B FAN A (NOTE 1)	P13 - OPEN QUENCH EMERG. PRW (NOTE 1)	P12 - S/D WATER RETURN PUMP	P11 - BKUP BRINE PUMP ON (NOTE 1)	P10 - BKUP CLEAN LIQ PUMP ON (NOTE 1)	P07 - SPARE	P06 - S/D BRINE PUMPS	P05 - S/D CLEAN LIQUOR PUMPS	P04 - S/D 1ST & 2ND STAGE ID FAN	P03 - SPARE	P02 - BYPASS CARBON FILTER (NOTE 1)	P01 - S/D IST STAGE ID FAN	P00 - S/D 2ND STAGE ID FAN	MALFUNCTION

ITEM NUM	TAG NUMBER			DESCRIPTION	SET POINT	17	16	15	14	13	12	11	10	07	06	05	04	03	02	01	00	17	16	15	14	13	12	11	10	07	06	05	04	03	02	01	00		REMARKS	ALARM BIT B001:XX/XX	MASK WORD B8:XX	
126	24	PSLL	913	RECVD WTR FEED PUMP DISCH PRESS	70 psig																																		3 sec delay. SP from TOCDF. Hardwired S/D of PAS-PUMP-134/135.	4020/00	NA	
127	24	XA	915	PAS-PUMP-135 RECVD WTR FEED PMP	MALF	X																																	Switchover to backup pump on malf. alarm when PAS-PUMP-135 is selected as primary.	4061/11	NA	
128	24	PSL	919	RECVD WTR FEED PUMP DISCH PRESS	85 psig																																		3 sec delay. Switchover to backup pump. SP from TOCDF.	4020/02	NA	
129	24	LAH	920	RECOVERED WATER TANK LEVEL HIGH	12'0"																																	X	SP per UM-6-D-510	4050/00	NA	
130	24	LAL	920	RECOVERED WATER TANK LEVEL LOW	2'0"																																	X	SP per UM-6-D-510	4050/02	NA	
131	24	LSHH	921	RECVD WATER TANK LEVEL HIGH HIGH	13'6"																																		3 sec delay. SP per UM-6-D-510. Hardwired S/D of PAS-PUMP-110.	4020/04	NA	
132	24	LSLL	922	RECVD WATER TANK LEVEL LOW LOW	1'4"																																		3 sec delay. SP per UM-6-D-510. S/D PAS-PUMP-134/135.	4020/06	NA	CH 3
133	24	TSH	971 A-F	1st STAGE ID FAN MTR WINDING TEMP	320°F		X																																SP from vendor info. Alarm on high temp for any of 24-TSH-971A through F. Stop feed per UM-6-D-505 Note 19.	1221/16	464	
134	24	TSHH	971 A-F	1st STAGE ID FAN MTR WINDING TEMP	329°F																															X			SP from vendor info. Alarm on high-high temp for any of 24-TSHH-971A through F. UM-6-D-505 Note 21 specifies S/D 1st stage, except when running in emergency mode.	1222/12	**468**	CH 3
135	24	IAH	972	PAS-BLOW-102 1ST STAGE MTR	**299 amp**		X																																2-min delay on startup. SP per RFI S-ALL-232.	1250/04	494	CH 3
136	24	XAH	973	PAS-BLOW-102 1ST STAGE VIB	0.25 in/sec		X																																See NOTE 5.	1251/02	546	CH 3
137	24	XSHH	973	PAS-BLOW-102 1ST STAGE VIB	0.5 in/sec																															X			S/D 1st stage, except when running in emergency mode. See NOTE 5.	1222/00	468	CH 3
138	24	XA	975	PAS-BLOW-102 1ST STAGE MTR	MALF	X	X																													X			Start I-lock for 1st stage motor. **Shut down first stage if not in emergency mode**	1261/11	488	CH 3
139	114	ZS	093B	PFS-FILT-110 BYPASS DAMPER	NOT CLOSED		X																																RCRA AWFCO MPF 34. Ref: UMAP818MPF. Agent feed permissive per UM-6-D-526 Note 4. **MACT AWFCO MPF (M)-37.**	5061/14	**422**	CH 3
140	114	XA	096	PFS-BURN-102 EXH MOIST ANALYZER	> 10% DIFF																																	X	Alarm when MIT-096A & B deviation exceeds 10% of upper range value.	**5052/00**	NA	CH 3
141	114	MAH	096C	PFS-BURN-102 EXH. REL. HUMIDITY	52%RH																																	X	Rolling hourly average. Ref: UMAP818MPF.	**5052/10**	NA	CH 3

UMCDF METAL PARTS FURNACE (MPF) POLLUTION ABATEMENT SYSTEM (PAS) AND PAS FILTER SYSTEM (PFS)

UMCDF MPF PAS/PFS

ALARM AND INTERLOCK MATRIX

UMCDF MPF PAS/PFS

P&IDs: UM-1-D-528, UM-6-D-504, -505, -523, -526, -527 and -528; PLC: ICS-CONR-113; INTERLOCK: I-8

B8:010/: F00 - SPARE; F01 - SPARE; F02 - S/D COOLING CONVEYOR; F03 - S/D UNLOAD CONVEYOR; F04 - STOP ZONE 1 TIMER; F05 - STOP ZONE 2 TIMER; F06 - STOP ZONE 3 TIMER; F07 - S/D DISCHARGE AIRLOCK CONVEYOR; F10 - S/D ZONE 3 CONVEYOR; F11 - S/D ZONE 2 CONVEYOR; F12 - S/D ZONE 1 CONVEYOR; F13 - S/D CHARGE AIRLOCK CONVEYOR; F14 - S/D COMBUSTION AIR BLOWER; F15 - S/D RESPECTIVE MPF AFTERBURNER; F16 - S/D RESPECTIVE MPF BURNER; F17 - STOP FEED; MALFUNCTION

B8:011/: P17 - S/D PFS-COOL-114A FAN B (NOTE 1); P16 - S/D PFS-COOL-114A FAN A (NOTE 1); P15 - S/D PFS-COOL-114B FAN B (NOTE 1); P14 - S/D PFS-COOL-114B FAN A (NOTE 1); P13 - OPEN QUENCH EMERG. PRW (NOTE 1); P12 - S/D WATER RETURN PUMP; P11 - BKUP BRINE PUMP ON (NOTE 1); P10 - BKUP CLEAN LIQ PUMP ON (NOTE 1); P07 - SPARE; P06 - S/D BRINE PUMPS; P05 - S/D CLEAN LIQUOR PUMPS; P04 - S/D 1ST & 2ND STAGE ID FAN; P03 - SPARE; P02 - BYPASS CARBON FILTER (NOTE 1); P01 - S/D IST STAGE ID FAN; P00 - S/D 2ND STAGE ID FAN; PREALARM

ITEM NUM	TAG NUMBER			DESCRIPTION	SET POINT	MALFUNCTION	B8:010/ 17	16	15	14	13	12	11	10	07	06	05	04	03	02	01	00	B8:011/ 17	16	15	14	13	12	11	10	07	06	05	04	03	02	01	00	PREALARM	REMARKS	ALARM BIT B001:XX/XX	MASK WORD B8:XX	
142	114	MAHH	096C	PFS-BURN-102 EXH. REL. HUMIDITY	55%RH		X																																	RCRA AWFCO MPF 33. Rolling hourly average. Ref: UMAP818MPF. **Either 96A or 96B or the average of the two measurements, depending upon the online instruments.**	**5051/12**	**420**	CH 3
143	**114**	**MAH**	**096A**	**PFS-BURN-102 EXH. REL. HUMIDITY**	**60%RH**																																		X	**Instantaneous Alarm REF: UMAP818MPF**	**5051/10**		CH 3
144	114	MSHH	096A	PFS-BURN-102 EXH. REL. HUMIDITY	80%RH		X																																	RCRA AWFCO MPF 33. **MACT AWFCO MPF(M)-36**. Instantaneous alarm. Ref: UMAP818MPF.	5020/00	**420**	CH 3
145	114	XS	096A	PFS-BURN-102 EXH MOIST ANALYZER	MALF	X	X																																	On time delay. Remove instrument from ROHA calculation if it is the active unit. **5 sec delay.**	5020/04	**322**	CH 3
146	**114**	**MAH**	**096B**	**PFS-BURN-102 EXH. REL. HUMIDITY**	**60%RH**																																		X	**Instantaneous alarm. Ref: UMAP818MPF.**	**5051/12**	**NA**	CH 3
147	**114**	**MSHH**	**096B**	**PFS-BURN-102 EXH. REL. HUMIDITY**	**80%RH**		**X**																																	**RCRA AWFCO MPF-33. MACT AWFCO MPF(M)-36. Instantaneous alarm. Ref: UMAP818MPF.**	**5020/02**		CH 3
148	114	XS	096B	PFS-BURN-102 EXH MOIST ANALYZER	MALF	X	X																																	On time delay. Remove instrument from ROHA calculation if it is the active unit. **5 sec time delay.**	5020/06	**322**	CH 3
149	114	TSHH	097	PFS-BURN-102 EXHAUST TEMP	180 F		X													X																				RCRA AWFCO MPF 32. Bypass filters per Note 3 on UM-6-D-526. Ref: UMAP818MPF. **MACT AWFCO MPF(M)-35.**	5020/10	**428**	CH 3
150	114	TISH	100	PFS-BURN-102 EXHAUST TEMP	168°F																																		X	5 sec delay. SP per DSIC.	5020/12	NA	
151	114	TSHH	100	PFS-BURN-102 EXHAUST TEMP	176°F																																			5 sec delay. S/D PFS-BURN-102. SP per DSIC.	5020/14	NA	
152	114	XA	127	PFS-BURN-102 BURNER TROUBLE	**Lockout**		**X**																																	Prealarm per RFI C-UMCDF-003 (UM-6-D-526 shows stop feed).	5021/00	NA	CH 3
153	**114**	**ZX**	**127**	**PFS-BURN-102 TROUBLE**	**TROUBLE**																																		X		**5020/16**		CH 3
154	114	FSL	133	PFS-PUMP-142 SUCTION FLOW	2.4 gpm																																		X	S/D PFS-PUMP-142 via 114-FV-133 after pump is started manually and switched to auto mode	**0821/10**	NA	CH 3
155	114	XA	354	CLEAN LIQ PUMP A (PFS-PUMP-136)	MALF	X																								X										Switchover to backup pump on malf. alarm when PFS-PUMP-136 is selected as primary.	1660/11	NA	

UMCDF METAL PARTS FURNACE (MPF) POLLUTION ABATEMENT SYSTEM (PAS) AND PAS FILTER SYSTEM (PFS)

UMCDF MPF PAS/PFS

ALARM AND INTERLOCK MATRIX

UMCDF MPF PAS/PFS

P&IDs: UM-1-D-528, UM-6-D-504, -505, -523, -526, -527 and -528; PLC: ICS-CONR-113; INTERLOCK: I-8

B8:010/

17	16	15	14	13	12	11	10	07	06	05	04	03	02	01	00
F00 - SPARE	F01 - SPARE	F02 - S/D COOLING CONVEYOR	F03 - S/D UNLOAD CONVEYOR	F04 - STOP ZONE 1 TIMER	F05 - STOP ZONE 2 TIMER	F06 - STOP ZONE 3 TIMER	F07 - S/D DISCHARGE AIRLOCK CONVEYOR	F10 - S/D ZONE 3 CONVEYOR	F11 - S/D ZONE 2 CONVEYOR	F12 - S/D ZONE 1 CONVEYOR	F13 - S/D CHARGE AIRLOCK CONVEYOR	F14 - S/D COMBUSTION AIR BLOWER	F15 - S/D RESPECTIVE MPF AFTERBURNER	F16 - S/D RESPECTIVE MPF BURNER	F17 - STOP FEED

B8:011/

17	16	15	14	13	12	11	10	07	06	05	04	03	02	01	00
P17 - S/D PFS-COOL-114A FAN B (NOTE 1)	P16 - S/D PFS-COOL-114A FAN A (NOTE 1)	P15 - S/D PFS-COOL-114B FAN B (NOTE 1)	P14 - S/D PFS-COOL-114B FAN A (NOTE 1)	P13 - OPEN QUENCH EMERG. PRW (NOTE 1)	P12 - S/D WATER RETURN PUMP	P11 - BKUP BRINE PUMP ON (NOTE 1)	P10 - BKUP CLEAN LIQ PUMP ON (NOTE 1)	P07 - SPARE	P06 - S/D BRINE PUMPS	P05 - S/D CLEAN LIQUOR PUMPS	P04 - S/D 1ST & 2ND STAGE ID FAN	P03 - SPARE	P02 - BYPASS CARBON FILTER (NOTE 1)	P01 - S/D IST STAGE ID FAN	P00 - S/D 2ND STAGE ID FAN

MALFUNCTION | **PREALARM**

ITEM NUM	TAG NUMBER			DESCRIPTION	SET POINT	MALFUNCTION	PREALARM	REMARKS	ALARM BIT B001:XX/XX	MASK WORD B8:XX	
156	114	FISL	356	CLEAN LIQ PUMP A SEAL WATER	0.15 gpm			3 sec delay. S/D PFS-PUMP-136 if selected as primary, which will cause 114-XA-354 to alarm. SP from instrument data sheet.	1620/04	NA	
157	114	PAL	358	CLEAN LIQ PUMP DISCH PRESS	50 psig			10 sec delay after pump startup. **45** sec delay before S/D of primary pump. SP & response per Oct 2000 ANCDF PAS/PFS review mtg.	1650/00	**NA**	CH 3
158	114	PALL	358	CLEAN LIQ PUMP DISCH PRESS	25 psig			RCRA AWFCO MPF 21 **and MACT AWFCO MPF(M)-21**. Ref: UMAP818MPF. Response per Oct 2000 ANCDF PAS/PFS review mtg.	1650/04	308	CH 3
159	114	PALL	358A	CLEAN LIQ PUMP DISCH PRESS	25 psig			MACT AWFCO MPF(M)-**21**. ROHA. Ref. UMUF873MPF.	**1653/10**	**310**	CH 3
160	114	XA	361	CLEAN LIQ PUMP B (PFS-PUMP-137)	MALF			Switchover to backup pump on malf. alarm when PFS-PUMP-137 is selected as primary.	1662/11	NA	
161	114	FISL	363	CLEAN LIQ PUMP B SEAL WATER	0.15 gpm			3 sec delay. S/D PFS-PUMP-137 if selected as primary, which will cause 114-XA-361 to alarm. SP from instrument data sheet.	1620/06	NA	
162	114	PDAH	364	PFS-COOL-114B CLEAN LIQ COOLER	**33 psid**		X	SP per RFI S-ALL-232.	0850/06	NA	CH 3
163	114	PDAL	364	PFS-COOL-114B CLEAN LIQ COOLER	**10 psid**		X	SP per RFI S-ALL-232.	0850/04	NA	CH 3
164	114	TAH	419	PFS-BURN-102 EXHAUST TEMP	172°F		X	SP per RFI S-ALL-241 R1. Instantaneous alarm.	5051/14	NA	
165	114	TAHH	419	PFS-BURN-102 EXHAUST TEMP	170°F			RCRA AWFCO MPF 32 **and MACT AWFCO MPF(M)-35**. Rolling hourly average. Ref: UMAP818MPF.	**5052/02**	**418**	CH 3
166	114	TAL	419	PFS-BURN-102 EXHAUST TEMP	135°F		X	SP per RFI S-ALL-241 R1. Instantaneous alarm.	5051/16	NA	
167	114	PDAH	438A	PFS-FILT-110 PREFILTER BANK	**1.2 in wc**		X	Prealarm per UMAP818MPF. SP per RFI S-ALL-232.	5050/00	NA	CH 3
168	114	PDAHH	438A	PFS-FILT-110 PREFILTER BANK	**1.5 in wc**			RCRA AWFCO MPF 30 **and MACT AWFCO MPF(M)-33**. Ref: UMSF992MPF.	**5053/10**	**554**	CH 3
169	**114**	**PDAL**	**438A**	**PFS-FILT-110 PREFILTER BANK**	**0.2 in wc**		**X**	**Only active/alarmed when PFS-FILT-110 is on line**	**5054/02**	**NA**	CH 3
170	**114**	**PDALL**	**438A**	**PFS-FILT-110 PREFILTER BANK**	**0.0 in wc**	**X**		**MACT AWFCO MPF(M)-42. Only active/alarmed when PFS-FILT-110 is on line.**	**5054/00**	**554**	CH 3

UMCDF METAL PARTS FURNACE (MPF) POLLUTION ABATEMENT SYSTEM (PAS) AND PAS FILTER SYSTEM (PFS)

UMCDF MPF PAS/PFS — ALARM AND INTERLOCK MATRIX — **UMCDF MPF PAS/PFS**

P&IDs: UM-1-D-528, UM-6-D-504, -505, -523, -526, -527 and -528; PLC: ICS-CONR-113; INTERLOCK: I-8

B8:010/

17	16	15	14	13	12	11	10	07	06	05	04	03	02	01	00
F00 - SPARE	F01 - SPARE	F02 - S/D COOLING CONVEYOR	F03 - S/D UNLOAD CONVEYOR	F04 - STOP ZONE 1 TIMER	F05 - STOP ZONE 2 TIMER	F06 - STOP ZONE 3 TIMER	F07 - S/D DISCHARGE AIRLOCK CONVEYOR	F10 - S/D ZONE 3 CONVEYOR	F11 - S/D ZONE 2 CONVEYOR	F12 - S/D ZONE 1 CONVEYOR	F13 - S/D CHARGE AIRLOCK CONVEYOR	F14 - S/D COMBUSTION AIR BLOWER	F15 - S/D RESPECTIVE MPF AFTERBURNER	F16 - S/D RESPECTIVE MPF BURNER	F17 - STOP FEED

B8:011/

17	16	15	14	13	12	11	10	07	06	05	04	03	02	01	00
P17 - S/D PFS-COOL-114A FAN B (NOTE 1)	P16 - S/D PFS-COOL-114A FAN A (NOTE 1)	P15 - S/D PFS-COOL-114B FAN B (NOTE 1)	P14 - S/D PFS-COOL-114B FAN A (NOTE 1)	P13 - OPEN QUENCH EMERG. PRW (NOTE 1)	P12 - S/D WATER RETURN PUMP	P11 - BKUP BRINE PUMP ON (NOTE 1)	P10 - BKUP CLEAN LIQ PUMP ON (NOTE 1)	P07 - SPARE	P06 - S/D BRINE PUMPS	P05 - S/D CLEAN LIQUOR PUMPS	P04 - S/D 1ST & 2ND STAGE ID FAN	P03 - SPARE	P02 - BYPASS CARBON FILTER (NOTE 1)	P01 - S/D IST STAGE ID FAN	P00 - S/D 2ND STAGE ID FAN

ITEM NUM	TAG NUMBER	DESCRIPTION	SET POINT	MALFUNCTION	PREALARM	REMARKS	ALARM BIT B001:XX/XX	MASK WORD B8:XX	
171	114 PDAH 438B	PFS-FILT-110 1st HEPA FILTER BANK	2.7 in wc		X	Prealarm per UMAP818MPF.	5050/02	NA	CH 3
172	114 PDAHH 438B	PFS-FILT-110 1st HEPA FILTER BANK	3.0 in wc	X		RCRA AWFCO MPF 31 **and MACT AWFCO MPF(M)-34**. Ref: UMSF992MPF.	5053/12	554	CH 3
173	**114 PDAL 438B**	**PFS-FILT-110 1st HEPA FILTER BANK**	**0.2 in wc**		**X**	**Only active/alarmed when PFS-FILT-110 is on line**	**5054/06**	**NA**	CH 3
174	**114 PDALL 438B**	**PFS-FILT-110 1st HEPA FILTER BANK**	**0.0 in wc**	**X**		**MACT AWFCO MPF(M)-43. Only active/alarmed when PFS-FILT-110 is on line.**	**5054/04**	**554**	CH 3
175	114 PDAH 438C	PFS-FILT-110 1st CARBON FILT BANK	1.2 in wc		X	Measures dP across primary bed in first carbon bank.	5050/04	NA	CH 3
176	114 PDAH 438D	PFS-FILT-110 2nd CARBON FILT BANK	1.2 in wc		X	Measures dP across primary bed in second carbon bank.	5050/06	NA	CH 3
177	114 PDAH 438E	PFS-FILT-110 3rd CARBON FILT BANK	1.2 in wc		X	Measures dP across primary bed in third carbon bank.	5050/10	NA	CH 3
178	114 PDAH 438F	PFS-FILT-110 4th CARBON FILT BANK	1.2 in wc		X	Measures dP across primary bed in fourth carbon bank.	5050/12	NA	CH 3
179	114 PDAH 438G	PFS-FILT-110 CARBON FILTER H210	1.2 in wc		X	Measures dP across second bed of all 4 carbon banks.	5052/14	NA	CH 3
180	114 PDAH 438H	PFS-FILT-110 2nd HEPA FILTER BANK	2.7 in wc		X	Prealarm per UMUF889PFS.	5052/16	NA	CH 3
181	114 PDAHH 438H	PFS-FILT-110 2nd HEPA FILTER BANK	3.0 in wc	X		RCRA AWFCO **MPF-31 and MACT AWFCO MPF(M)-34**. Ref: UMUF889PFS.	5054/10	554	CH 3
182	**114 PDAL 438H**	**PFS-FILT-110 2nd HEPA FILTER BANK**	**0.2 in wc**		**X**	**Only active/alarmed when PFS-FILT-110 is on line**	**5054/14**	**NA**	CH 3
183	**114 PDALL 438H**	**PFS-FILT-110 2nd HEPA FILTER BANK**	**0.0 in wc**	**X**		**MACT AWFCO MPF(M)-43. Only active/alarmed when PFS-FILT-110 is on line.**	**5054/12**	**554**	CH 3
184	114 PDAH 438I	PFS-FILT-110 OVERALL DP	16 in wc		X	Overall dP SP per RFI S-ALL-232. Note: # of carbon banks & notation changed after RFI release.	5053/00	NA	CH 3
185	114 XA 484	PFS-COOL-114B FAN A	TROUBLE	X		On time delay. Alarm generated by XSHH-526 or VFD in fault lockout. VFD internally configured to stop motor (see RFI C-PBCDF-002).	0821/04	NA	

UMCDF METAL PARTS FURNACE (MPF) POLLUTION ABATEMENT SYSTEM (PAS) AND PAS FILTER SYSTEM (PFS)

UMCDF MPF PAS/PFS

ALARM AND INTERLOCK MATRIX

UMCDF MPF PAS/PFS

P&IDs: UM-1-D-528, UM-6-D-504, -505, -523, -526, -527 and -528; PLC: ICS-CONR-113; INTERLOCK: I-8

B8:010/

17	16	15	14	13	12	11	10	07	06	05	04	03	02	01	00
F00 - SPARE	F01 - SPARE	F02 - S/D COOLING CONVEYOR	F03 - S/D UNLOAD CONVEYOR	F04 - STOP ZONE 1 TIMER	F05 - STOP ZONE 2 TIMER	F06 - STOP ZONE 3 TIMER	F07 - S/D DISCHARGE AIRLOCK CONVEYOR	F10 - S/D ZONE 3 CONVEYOR	F11 - S/D ZONE 2 CONVEYOR	F12 - S/D ZONE 1 CONVEYOR	F13 - S/D CHARGE AIRLOCK CONVEYOR	F14 - S/D COMBUSTION AIR BLOWER	F15 - S/D RESPECTIVE MPF AFTERBURNER	F16 - S/D RESPECTIVE MPF BURNER	F17 - STOP FEED

B8:011/

17	16	15	14	13	12	11	10	07	06	05	04	03	02	01	00
P17 - S/D PFS-COOL-114A FAN B (NOTE 1)	P16 - S/D PFS-COOL-114A FAN A (NOTE 1)	P15 - S/D PFS-COOL-114B FAN B (NOTE 1)	P14 - S/D PFS-COOL-114B FAN A (NOTE 1)	P13 - OPEN QUENCH EMERG. PRW (NOTE 1)	P12 - S/D WATER RETURN PUMP	P11 - BKUP BRINE PUMP ON (NOTE 1)	P10 - BKUP CLEAN LIQ PUMP ON (NOTE 1)	P07 - SPARE	P06 - S/D BRINE PUMPS	P05 - S/D CLEAN LIQUOR PUMPS	P04 - S/D 1ST & 2ND STAGE ID FAN	P03 - SPARE	P02 - BYPASS CARBON FILTER (NOTE 1)	P01 - S/D IST STAGE ID FAN	P00 - S/D 2ND STAGE ID FAN

MALFUNCTION / **PREALARM**

ITEM NUM	TAG NUMBER	DESCRIPTION	SET POINT	17	16	15	14	13	12	11	10	07	06	05	04	03	02	01	00	17	16	15	14	13	12	11	10	07	06	05	04	03	02	01	00	MALFUNCTION	PREALARM	REMARKS	ALARM BIT B001:XX/XX	MASK WORD B8:XX	
186	114 XA 485	PFS-COOL-114B FAN B	TROUBLE																			X																On time delay. Alarm generated by XSHH-524 or VFD in fault lockout. VFD internally configured to stop motor (see RFI C-PBCDF-002).	0821/06	NA	
187	114 XA 486	PFS-COOL-114A FAN B	TROUBLE																	X																		On time delay. Alarm generated by XSHH-542 or VFD in fault lockout. VFD internally configured to stop motor (see RFI C-PBCDF-002).	0821/02	NA	
188	114 PDAH 487A	PFS-FILT-113 PREFILTER BANK	**1.2 in wc**																																		X		5050/14	NA	CH 3
189	114 PDAHH 487A	PFS-FILT-113 PREFILTER BANK	**1.5 in wc**		X																																	RCRA AWFCO DFS 35, LIC 33, or MPF 30. PFS-FILT-113 is common spare; stop feed depends on furnace alignment. Ref: UMAP815DFS, UMAP668LIC, & UMAP818MPF. **MACT AWFCO MPF(M)-33.**	**5054/16**	**558**	CH 3
190	**114 PDAL 487A**	**PFS-FILT-113 PREFILTER BANK**	**0.2 in wc**																																		**X**	**Only active/alarmed when PFS-FILT-113 is on line.**	**5055/10**	**NA**	CH 3
191	**114 PDALL 487A**	**PFS-FILT-113 PREFILTER BANK**	**0.0 in wc**		**X**																																	**MACT AWFCO MPF(M)-42. Only active/alarmed when PFS-FILT-113 is on line.**	**5055/00**	**558**	CH 3
192	114 PDAH 487B	PFS-FILT-113 1st HEPA FILTER BANK	**2.7 in wc**																																		X		5050/16	NA	CH 3
193	114 PDAHH 487B	PFS-FILT-113 1st HEPA FILTER BANK	**3.0 in wc**		X																																	RCRA AWFCO DFS 35, LIC 33, or MPF **31**. PFS-FILT-113 is common spare; stop feed depends on furnace alignment. Ref: UMAP815DFS, UMAP668LIC, & UMAP818MPF. **MACT AWFCO MPF(M)-34.**	**5055/04**	**558**	CH 3
194	**114 PDAL 487B**	**PFS-FILT-113 1st HEPA FILTER BANK**	**0.2 in wc**																																		**X**	**Only active/alarmed when PFS-FILT-113 is on line.**	**5055/10**	**NA**	
195	**114 PDALL 487B**	**PFS-FILT-113 1st HEPA FILTER BANK**	**0.0 in wc**		**X**																																	**MACT AWFCO MPF(M)-43. Only active/alarmed when PFS-FILT-113 is on line.**	**5055/06**	**558**	
196	114 PDAH 487C	PFS-FILT-113 1st CARBON FILT BANK	**1.2 in wc**																																		X	Measures dP across primary bed in first carbon bank.	5051/00	NA	CH 3
197	114 PDAH 487D	PFS-FILT-113 2nd CARBON FILT BANK	**1.2 in wc**																																		X	Measures dP across primary bed in second carbon bank.	5051/02	NA	CH 3

UMCDF METAL PARTS FURNACE (MPF) POLLUTION ABATEMENT SYSTEM (PAS) AND PAS FILTER SYSTEM (PFS)

UMCDF MPF PAS/PFS

ALARM AND INTERLOCK MATRIX

UMCDF MPF PAS/PFS

P&IDs: UM-1-D-528, UM-6-D-504, -505, -523, -526, -527 and -528; PLC: ICS-CONR-113; INTERLOCK: I-8

B8:010/

17	16	15	14	13	12	11	10	07	06	05	04	03	02	01	00
F00 - SPARE	F01 - SPARE	F02 - S/D COOLING CONVEYOR	F03 - S/D UNLOAD CONVEYOR	F04 - STOP ZONE 1 TIMER	F05 - STOP ZONE 2 TIMER	F06 - STOP ZONE 3 TIMER	F07 - S/D DISCHARGE AIRLOCK CONVEYOR	F10 - S/D ZONE 3 CONVEYOR	F11 - S/D ZONE 2 CONVEYOR	F12 - S/D ZONE 1 CONVEYOR	F13 - S/D CHARGE AIRLOCK CONVEYOR	F14 - S/D COMBUSTION AIR BLOWER	F15 - S/D RESPECTIVE MPF AFTERBURNER	F16 - S/D RESPECTIVE MPF BURNER	F17 - STOP FEED

B8:011/

17	16	15	14	13	12	11	10	07	06	05	04	03	02	01	00
P17 - S/D PFS-COOL-114A FAN B (NOTE 1)	P16 - S/D PFS-COOL-114A FAN A (NOTE 1)	P15 - S/D PFS-COOL-114B FAN B (NOTE 1)	P14 - S/D PFS-COOL-114B FAN A (NOTE 1)	P13 - OPEN QUENCH EMERG. PRW (NOTE 1)	P12 - S/D WATER RETURN PUMP	P11 - BKUP BRINE PUMP ON (NOTE 1)	P10 - BKUP CLEAN LIQ PUMP ON (NOTE 1)	P07 - SPARE	P06 - S/D BRINE PUMPS	P05 - S/D CLEAN LIQUOR PUMPS	P04 - S/D 1ST & 2ND STAGE ID FAN	P03 - SPARE	P02 - BYPASS CARBON FILTER (NOTE 1)	P01 - S/D IST STAGE ID FAN	P00 - S/D 2ND STAGE ID FAN

ITEM NUM	TAG NUMBER	DESCRIPTION	SET POINT	MALFUNCTION	PREALARM	REMARKS	ALARM BIT B001:XX/XX	MASK WORD B8:XX	
198	114 PDAH 487E	PFS-FILT-113 3rd CARBON FILT BANK	1.2 in wc		X	Measures dP across primary bed in third carbon bank.	5051/04	NA	CH 3
199	114 PDAH 487F	PFS-FILT-113 4th CARBON FILT BANK	1.2 in wc		X	Measures dP across primary bed in fourth carbon bank.	5051/06	NA	CH 3
200	114 PDAH 487G	PFS-FILT-113 CARBON FILTER BANKS 1, 2, 3, 4 SECOND BED	1.2 in wc		X	Measures dP across second bed of all 4 carbon banks.	5053/02	NA	CH 3
201	114 PDAH 487H	PFS-FILT-113 2nd HEPA FILTER BANK	2.7 in wc		X	Prealarm per UMUF889PFS.	5053/04	NA	CH 3
202	114 PDAHH 487H	PFS-FILT-113 2nd HEPA FILTER BANK	3.0 in wc	X		RCRA AWFCO **MPF-31 and MACT AWFCO MPF(M)-34** per UMUF889PFS. PFS-FILT-113 is common spare; stop feed depends on furnace alignment.	5055/12	558	CH 3
203	**114 PDAL 487H**	**PFS-FILT-113 2nd HEPA FILTER BANK**	**0.2 in wc**		**X**	**Only active/alarmed when PFS-FILT-113 is on line.**	**5055/16**	**NA**	CH 3
204	**114 PDALL 487H**	**PFS-FILT-113 2nd HEPA FILTER BANK**	**0.0 in wc**	**X**		**MACT AWFCO MPF(M)-43. Only active/alarmed when PFS-FILT-113 is on line.**	**5055/14**	**558**	CH 3
205	114 PDAH 487I	PFS-FILT-113 OVERALL DP	16 in wc		X	Overall dP SP per RFI S-ALL-232. Note: # of carbon banks & notation changed after RFI release.	5053/06	NA	CH 3
206	114 PDAH 510	PFS-COOL-114A CLEAN LIQ COOLER	33 psid		X		0850/02	NA	CH 3
207	114 PDAL 510	PFS-COOL-114A CLEAN LIQ COOLER	10 psid		X		0850/00	NA	CH 3
208	114 TAH 522	PFS-COOL-114B CLEAN LIQ COOLER	135°F		X	SP per RFI S-ALL-232.	0850/16	NA	
209	114 TAL 522	PFS-COOL-114B CLEAN LIQ COOLER	100°F			SP per RFI S-ALL-232. Instant alarm, 120-sec delay for cooler S/D (see FAWB Note B-20).	0850/14	NA	
210	114 XSH 523	PFS-COOL-114B FAN B VIBRATION	See NOTE 6		X	(vendor info shows additional hardwired startup time delay relay)	0820/06	NA	CH 3
211	114 XSHH 524	PFS-COOL-114B FAN B VIBRATION	See NOTE 6			(vendor info shows additional hardwired startup time delay relay)	0820/16	NA	CH 3
212	114 XSH 525	PFS-COOL-114B FAN A VIBRATION	See NOTE 6		X	(vendor info shows additional hardwired startup time delay relay)	0820/04	NA	CH 3
213	114 XSHH 526	PFS-COOL-114B FAN A VIBRATION	See NOTE 6			(vendor info shows additional hardwired startup time delay relay)	0820/14	NA	CH 3

UMCDF METAL PARTS FURNACE (MPF) POLLUTION ABATEMENT SYSTEM (PAS) AND PAS FILTER SYSTEM (PFS)

UMCDF MPF PAS/PFS

ALARM AND INTERLOCK MATRIX

UMCDF MPF PAS/PFS

P&IDs: UM-1-D-528, UM-6-D-504, -505, -523, -526, -527 and -528; PLC: ICS-CONR-113; INTERLOCK: I-8

B8:010/

ITEM NUM	TAG NUMBER			DESCRIPTION	SET POINT	F00 - SPARE	F01 - SPARE	F02 - S/D COOLING CONVEYOR	F03 - S/D UNLOAD CONVEYOR	F04 - STOP ZONE 1 TIMER	F05 - STOP ZONE 2 TIMER	F06 - STOP ZONE 3 TIMER	F07 - S/D DISCHARGE AIRLOCK CONVEYOR	F10 - S/D ZONE 3 CONVEYOR	F11 - S/D ZONE 2 CONVEYOR	F12 - S/D ZONE 1 CONVEYOR	F13 - S/D CHARGE AIRLOCK CONVEYOR	F14 - S/D COMBUSTION AIR BLOWER	F15 - S/D RESPECTIVE MPF AFTERBURNER	F16 - S/D RESPECTIVE MPF BURNER	F17 - STOP FEED	MALFUNCTION
						17	16	15	14	13	12	11	10	07	06	05	04	03	02	01	00	
214	114	SAH	527A	PFS-COOL-114B FAN B SPEED	**59 Hz**																	
215	114	SAH	528A	PFS-COOL-114B FAN A SPEED	**59 Hz**																	
216	114	TAH	539	PFS-COOL-114A CLEAN LIQ COOLER	135°F																	
217	114	TAL	539	PFS-COOL-114A CLEAN LIQ COOLER	100°F																	
218	114	XSH	541	PFS-COOL-114A FAN B VIBRATION	See NOTE 6																	
219	114	XSHH	542	PFS-COOL-114A FAN B VIBRATION	See NOTE 6																	
220	114	XSH	543	PFS-COOL-114A FAN A VIBRATION	See NOTE 6																	
221	114	XSHH	544	PFS-COOL-114A FAN A VIBRATION	See NOTE 6																	
222	114	SAH	545A	PFS-COOL-114A FAN B SPEED	**59 Hz**																	
223	114	SAH	546A	PFS-COOL-114A FAN A SPEED	**59 Hz**																	
224	114	XA	552	PFS-COOL-114A FAN A	TROUBLE																	
225	MON	ACAM	129 223 225	ACAMS COMMON STACK	SEE NOTE 4		X															
226	MON	ACAM	129 223 225	ACAMS COMMON STACK	MALF	X	X															
227	MON	ACAM	129 223 225	ACAMS COMMON STACK	OFFLINE		X															
228	MON	ACAM	129 223 225	ACAMS COMMON STACK	NOT STAGGERED		X															
229	MON	ACAM	167	ACAMS MPF PAS	SEE NOTE 4		X															

B8:011/

ITEM NUM	TAG NUMBER			DESCRIPTION	SET POINT	P17 - S/D PFS-COOL-114A FAN B (NOTE 1)	P16 - S/D PFS-COOL-114A FAN A (NOTE 1)	P15 - S/D PFS-COOL-114B FAN B (NOTE 1)	P14 - S/D PFS-COOL-114B FAN A (NOTE 1)	P13 - OPEN QUENCH EMERG. PRW (NOTE 1)	P12 - S/D WATER RETURN PUMP	P11 - BKUP BRINE PUMP ON (NOTE 1)	P10 - BKUP CLEAN LIQ PUMP ON (NOTE 1)	P07 - SPARE	P06 - S/D BRINE PUMPS	P05 - S/D CLEAN LIQUOR PUMPS	P04 - S/D 1ST & 2ND STAGE ID FAN	P03 - SPARE	P02 - BYPASS CARBON FILTER (NOTE 1)	P01 - S/D IST STAGE ID FAN	P00 - S/D 2ND STAGE ID FAN	PREALARM	REMARKS	ALARM BIT B001:XX/XX	MASK WORD B8:XX	
						17	16	15	14	13	12	11	10	07	06	05	04	03	02	01	00					
214	114	SAH	527A	PFS-COOL-114B FAN B SPEED	**59 Hz**			X															**(59Hz = 1790 rpm).**	0851/06	NA	CH 3
215	114	SAH	528A	PFS-COOL-114B FAN A SPEED	**59 Hz**				X														**(59Hz = 1790 rpm).**	0851/04	NA	CH 3
216	114	TAH	539	PFS-COOL-114A CLEAN LIQ COOLER	135°F																	X	SP per RFI S-ALL-232.	0850/12	NA	
217	114	TAL	539	PFS-COOL-114A CLEAN LIQ COOLER	100°F	X	X																SP per RFI S-ALL-232. Instant alarm, 120-sec delay for cooler S/D (see FAWB Note B-20).	0850/10	NA	
218	114	XSH	541	PFS-COOL-114A FAN B VIBRATION	See NOTE 6																	X	(vendor info shows additional hardwired startup time delay relay)	0820/02	NA	CH 3
219	114	XSHH	542	PFS-COOL-114A FAN B VIBRATION	See NOTE 6	X																	(vendor info shows additional hardwired startup time delay relay)	0820/12	NA	CH 3
220	114	XSH	543	PFS-COOL-114A FAN A VIBRATION	See NOTE 6																	X	(vendor info shows additional hardwired startup time delay relay)	0820/00	NA	CH 3
221	114	XSHH	544	PFS-COOL-114A FAN A VIBRATION	See NOTE 6		X																(vendor info shows additional hardwired startup time delay relay)	0820/10	NA	CH 3
222	114	SAH	545A	PFS-COOL-114A FAN B SPEED	**59 Hz**	X																	**(59Hz = 1790 rpm).**	0851/02	NA	CH 3
223	114	SAH	546A	PFS-COOL-114A FAN A SPEED	**59 Hz**		X																**(59Hz = 1790 rpm).**	0851/00	NA	CH 3
224	114	XA	552	PFS-COOL-114A FAN A	TROUBLE		X																On time delay. Alarm generated by XSHH-544 or VFD in fault lockout. VFD internally configured to stop motor (see RFI C-PBCDF-002).	0821/00	NA	
225	MON	ACAM	129 223 225	ACAMS COMMON STACK	SEE NOTE 4																		RCRA AWFCO MPF 17. Stop feed for DFS, LICs, MPF. DICO from ICS-CONR-112. Ref. UMAP818MPF.	B4:31/00	**450**	CH 3
226	MON	ACAM	129 223 225	ACAMS COMMON STACK	MALF																		RCRA AWFCO MPF 17. Stop feed for DFS, LICs, MPF. DICO from ICS-CONR-112. See NOTE 4. Ref. UMAP818MPF.	B4:31/00	**450**	CH 3
227	MON	ACAM	129 223 225	ACAMS COMMON STACK	OFFLINE																		RCRA AWFCO MPF 17. Stop feed for DFS, LICs, MPF. DICO from ICS-CONR-112. See NOTE 4. Ref. UMAP818MPF.	B4:31/00	**450**	CH 3
228	MON	ACAM	129 223 225	ACAMS COMMON STACK	NOT STAGGERED																		RCRA AWFCO MPF 17. Stop feed for DFS, LICs, MPF. DICO from ICS-CONR-112. See NOTE 4. Ref. UMAP818MPF.	B4:31/00	**450**	CH 3
229	MON	ACAM	167	ACAMS MPF PAS	SEE NOTE 4																		RCRA AWFCO MPF 16. Ref: UMAP818MPF.	**4620/00**	**500**	CH 3

UMCDF METAL PARTS FURNACE (MPF) POLLUTION ABATEMENT SYSTEM (PAS) AND PAS FILTER SYSTEM (PFS)

UMCDF MPF PAS/PFS

ALARM AND INTERLOCK MATRIX

UMCDF MPF PAS/PFS

P&IDs: UM-1-D-528, UM-6-D-504, -505, -523, -526, -527 and -528; PLC: ICS-CONR-113; INTERLOCK: I-8

B8:010/

ITEM NUM	TAG NUMBER	DESCRIPTION	SET POINT	MALFUNCTION	F17 - STOP FEED	F16 - S/D RESPECTIVE MPF BURNER	F15 - S/D RESPECTIVE MPF AFTERBURNER	F14 - S/D COMBUSTION AIR BLOWER	F13 - S/D CHARGE AIRLOCK CONVEYOR	F12 - S/D ZONE 1 CONVEYOR	F11 - S/D ZONE 2 CONVEYOR	F10 - S/D ZONE 3 CONVEYOR	F07 - S/D DISCHARGE AIRLOCK CONVEYOR	F06 - STOP ZONE 3 TIMER	F05 - STOP ZONE 2 TIMER	F04 - STOP ZONE 1 TIMER	F03 - S/D UNLOAD CONVEYOR	F02 - S/D COOLING CONVEYOR	F01 - SPARE	F00 - SPARE
					17	16	15	14	13	12	11	10	07	06	05	04	03	02	01	00
230	MON ACAM 167	ACAMS MPF PAS	MALF	X	X															
231	MON ACAM 167	ACAMS MPF PAS	OFFLINE		X															
232	MON ACAM 355	ACAMS MPF PFS-BURN-102	See Note 4		X															
233	MON ACAM 355	ACAMS MPF PFS-BURN-102	LOQ		X															
234	MON ACAM 355	ACAMS MPF PFS-BURN-102	AGENT CONC		X															
235	MON ACAM 355	ACAMS MPF PFS-BURN-102	OFFLINE																	
236	MON ACAM 355	ACAMS MPF PFS-BURN-102	MALF																	
237		BRA TANKS LVL HI-HI / UNAVAILABLE	DICO				X	X					X							
238		MPF PAS/PFS NORMAL	NOT NORMAL				X	X					X							

B8:011/

ITEM NUM	TAG NUMBER	DESCRIPTION	SET POINT	PREALARM	P00 - S/D 2ND STAGE ID FAN	P01 - S/D IST STAGE ID FAN	P02 - BYPASS CARBON FILTER (NOTE 1)	P03 - SPARE	P04 - S/D 1ST & 2ND STAGE ID FAN	P05 - S/D CLEAN LIQUOR PUMPS	P06 - S/D BRINE PUMPS	P07 - SPARE	P10 - BKUP CLEAN LIQ PUMP ON (NOTE 1)	P11 - BKUP BRINE PUMP ON (NOTE 1)	P12 - S/D WATER RETURN PUMP	P13 - OPEN QUENCH EMERG. PRW (NOTE 1)	P14 - S/D PFS-COOL-114B FAN A (NOTE 1)	P15 - S/D PFS-COOL-114B FAN B (NOTE 1)	P16 - S/D PFS-COOL-114A FAN A (NOTE 1)	P17 - S/D PFS-COOL-114A FAN B (NOTE 1)
					17	16	15	14	13	12	11	10	07	06	05	04	03	02	01	00
230	MON ACAM 167	ACAMS MPF PAS	MALF																	
231	MON ACAM 167	ACAMS MPF PAS	OFFLINE																	
232	MON ACAM 355	ACAMS MPF PFS-BURN-102	See Note 4																	
233	MON ACAM 355	ACAMS MPF PFS-BURN-102	LOQ																	
234	MON ACAM 355	ACAMS MPF PFS-BURN-102	AGENT CONC																	
235	MON ACAM 355	ACAMS MPF PFS-BURN-102	OFFLINE	X																
236	MON ACAM 355	ACAMS MPF PFS-BURN-102	MALF	X																
237		BRA TANKS LVL HI-HI / UNAVAILABLE	DICO																	
238		MPF PAS/PFS NORMAL	NOT NORMAL																	

ITEM NUM	REMARKS	ALARM BIT B001:XX/XX	MASK WORD B8:XX	
230	RCRA AWFCO MPF 16. Ref: UMAP818MPF. See NOTE 4.	4620/06	500	CH 3
231	RCRA AWFCO MPF 16. Ref: UMAP818MPF. See NOTE 4.	4620/06	500	CH 3
232	RCRA AWFCO MPF-35			CH 3
233				CH 3
234				CH 3
235				CH 3
236				CH 3
237	RCRA AWFCO MPF 18. See BRA FAWB for tag #s and setpoints.	B4:23/02	508	CH 3
238		B601/03	440	CH 3

NOTE 1: P02, P10, P11, P13, P14, P15, P16, and P17 responses are not part of the deathwish relay. These responses are included as column headings for presentation clarity.

NOTE 2: The UMCDF CEMS alarm configuration is based on UMAC908MON R2, the response to RFI S-ALL-249, and conversations with UMCDF SC personnel. ECPs UMAP818MPF, UMUF873MPF, and UMSF992MPF were also used as references for RCRA and MACT AWFCOs. Setpoints may be modified based on trial burn results.

NOTE 3: 24-LSHHH-244 additional interlocks: 1) close 24-XV-226 and inhibit timer activation, 2) close 24-XY-250B/D, 3) close 24-XY-264B/D. Also when controllers are in AUTO, 1) close 24-LV-243, 2) close 24-LV-245, 3) close 24-AV-247, 4) close 24-AV-224.

NOTE 4: Allowable stack concentration (ASC) for chemical agent are (mg/m3) : GB= 0.0003, H/HD/HT= 0.03, and VX=0.0003. RCRA AWFCO setpoint is 1 ASC. In addition, a RCRA AWFCO is initiated if: 1) Less than two ACAMS are online monitoring the exhaust gas , 2) sampling periods for online ACAMS are not staggered, 3) online ACAMS is in malfunction while in the sampling mode.

NOTE 5: PAS exhaust blower vibration alarms reflect the current design. Per RFI C-ANCDF-005, the blower foundation design requires that the foundation vibration be < 1 mil double amplitude. This requirement was the basis for recommended setpoints in RFI S-ALL-0232. The vibration alarm setpoints may be changed, or new alarms added, to meet the foundation vibration design limits.

NOTE 6: After the Oct 2000 AN PAS/PFS review meeting, the DSIC investigated the clean liquor air cooler vibration alarm setpoints. They found that the Murphy vibration switches are set by turning an uncalibrated screw. Specific vibration units could not be determined. The high vibration switch is set by turning the screw 1/4 turn past its start-up trip point and the high-high switch is set by turning the screw 1/2 turn past its start-up trip point.

APPENDIX D

PLC Automatic Control Sequences

Appendix D contains a summary of PLC automatic control sequences based on the current versions of the PLC code for each of the sites.

The PLC automatic control sequence summaries were generated based on the control system rung ladders in the PLC code for the pollution abatement systems for each of furnaces. The operator interface with the PLCs, the Advisor PC system, stores device information in a database that consists of *tags*, or database records used for storing all necessary information related to a device that is monitored or controlled by the Advisor PC system. **D6** tags are used for discrete devices that may be controlled from the CON. In this appendix, automatic control for all devices with **D6** tags are described, grouped by the Advisor PC screens on which they appear. *Details related to **D6** device format can be found in the CSDP Control Systems Software Design Guide. Note that Advisor PC tag numbers may not match P&ID tag numbers exactly since Advisor PC tag numbers are labels in the code that refer to a device that may be more encompassing than the P&ID device.*

Because the PAS PLC automatic control sequences are to be similar for many devices for all four sites, the control sequences are listed in a single table for each screen with annotations in the description to indicate the differences, if any, between the control for the device at the different sites. In addition, if control sequence differences exist between the 2 LIC furnaces at TOCDF or UMCDF, these differences are also noted. For PAS devices whose PLC automatic control sequences differ significantly between TOCDF and the sites with PFS equipment, the PLC automatic control sequences for the different sites will be listed in separate tables. For PFS equipment that does not exist at TOCDF, PLC automatic control sequences are listed in tables that apply to ANCDF, PBCDF and UMCDF only.

D.1 PAS/PFS PLC Automatic Control Sequences

Site-specific code currently exists for *ANCDF and* TOCDF. The Equipment Installation Contractor (EIC) is, or will be, developing site-specific code for PBCDF and UMCDF. At all sites, PAS and PFS components are controlled by the same PLC as its associated furnace. The EIC has provided detailed but preliminary automatic control sequence descriptions for UMCDF PFS devices[1]. These descriptions have been incorporated into this document. The actual automatic control for the PFS devices may require modification during systemization and subsequent operations. These changes will be reflected in a future revision to the PAS/PFS FAWB.

[1] *When applying the UMCDF PFS device logic to ANCDF and PBCDF, LIC#1 and PFS-FILT-109 logic does not apply to ANCDF, and LIC#2 and PFS-FILT-209 logic does not apply to PBCDF.*

At TOCDF, DFS PAS operations are controlled by ICS-CONR-112 and MPF PAS operations are controlled by ICS-CONR-113. The DFS PAS and PFS and the MPF PAS and PFS at the future sites will be controlled by the same PLCs.

At TOCDF and UMCDF, control for LIC #1 PAS is provided by ICS-CONR-114 and control for LIC #2 PAS is provided by ICS-CONR-119. At ANCDF and PBCDF, control of the LIC furnace PAS and PFS will be provided by ICS-CONR-114. *ANCDF LIC tag numbers are similar to TOCDF/UMCDF LIC 2 tag numbers and PBCDF LIC tag numbers are similar to TOCDF/UMCDF LIC 1 tag numbers.*

Tables D.9 through D.13 present the control logic for the LIC PAS at *ANCDF and* TOCDF. Tables D.26 and D.27 present the control logic for the LIC PFS equipment at UMCDF. Control logic for analogous devices for each of the two LIC furnaces are listed in the tables with the LIC #2 device identifiers (e.g., tag numbers, component numbers) enclosed in brackets []. The information in Tables D.3 through D.19 is based on the TOCDF control system rung ladders as of *February 2000 and on the January 2000 ANCDF control code* . The information in Tables D.21 through D.27 is based on preliminary UMCDF control system rung ladders submitted by the EIC for inclusion in the FAWB *and on the January 2000 ANCDF control code*.

The DFS furnace and DFS PAS have 12 Advisor PC screens associated with their operation. Six of these screens are associated with furnace operations; control sequences associated with devices on those screens are described in the DFS programmatic process FAWB (Book 25). The six screens described in this appendix for the DFS PAS are listed in Table D.1. The three Advisor PC screens associated with DFS PFS operation at ANCDF, PBCDF, and UMCDF are listed in Table D.2.

The MPF and MPF PAS have 22 Advisor PC screens associated with their operation. Sixteen of these screens are associated with furnace operations; control sequences associated with devices on those screens are described in the MPF programmatic process FAWB (Book 27). The six screens described in this appendix for the MPF PAS are listed in Table D.1. The two Advisor PC screens associated with MPF PFS operation at ANCDF, PBCDF, and UMCDF are listed in Table D.2.

An additional screen is also used to monitor operation of the MPF/DFS spare demister vessel when it is aligned with either the MPF or the DFS. This screen, MDS, listed in Table D.1, has no D6-tag devices.

Each of the LIC furnace systems has 11 screens associated with its operation. Six of these screens are associated with furnace operations; control sequences associated with devices on those screens are described in the LIC programmatic process FAWB (Book 26). The five screens for each LIC PAS that are described in this appendix are listed in Table D.1. An additional screen is also used to monitor operation of the LIC spare demister vessel when it is aligned with one of the two LIC systems. This screen, LDS, listed in Table D.1, has no D6-tag devices. The two Advisor PC screens associated with

operation of each of the LIC PFSs at ANCDF, PBCDF, and UMCDF are listed in Table D.2.

Table D.1 PAS Advisor PC Screens

Advisor PC Screen Name	Process Screen Designation
DFS PAS Quench	DFQ
DFS PAS Venturi	DFV
DFS PAS Scrubber	DFS
DFS PAS Demister	DFD
DFS Induced Draft Fans	DFI
DFS Emergency Induced Draft Fan	DFE
LIC1 [LIC 2] PAS Quench	LQ1 [LQ2]
LIC1 [LIC 2] PAS Venturi	LV1 [LV2]
LIC1 [LIC 2] PAS Scrubber	LS1 [LS2]
LIC1 [LIC 2] PAS Demister	LD1 [LD2]
LIC PAS Spare Demister	LDS
LIC1 [LIC 2] Induced Draft Fans	LI1 [LI2]
MPF PAS Quench	MPQ
MPF PAS Venturi	MPV
MPF PAS Scrubber	MPS
MPF PAS Demister	MPD
MPF Induced Draft Fans	MPI
MPF Emergency Induced Draft Fan	MPE
MPF/DFS PAS Spare Demister	MDS

Table D.2 Preliminary PFS Advisor PC Screens

Advisor PC Screen Name	Process Screen Designation
DFS PAS Filter System	DFF
DFS Clean Liquor Cooler 1	DC1
DFS Clean Liquor Cooler 2	DC2
MPF PAS Filter System	MFF
MPF Clean Liquor Cooler	MFC
LIC 1 [LIC 2] PAS Filter System	L1F [L2F]
LIC 1 [LIC 2] Clean Liquor Cooler	L1C [L2C]

Table D.3. *ANCDF and* TOCDF DFS PAS PLC Automatic Control Sequences
Advisor PC Screen: **DFQ**

Device:	**24-TV-001 DFS PAS-TOWR-103 Emergency Quench Valve**
Advisor PC Tag:	X24TY001
CONR:	C112
Driver Word:	1461
Driver Type:	3
Auto open:	The auto open relay will be active if any of the following conditions is satisfied: • 24-TSHH-001 (quench tower exhaust temperature) is active *(See FAWB Note B-7)* • *(TE only)* 24-TAHH-374 (quench tower exhaust temperature) is active • *(TE only)* 24-TAHHH-374 (quench tower exhaust temperature) is active • Test Timer is active (15 seconds every morning at 4:50 a.m. if either afterburner is lit and 16-TIC-092 indicates at least 1000 °F) *(See FAWB Note B-8).*
I-LOCK:	NONE (*NOTE: Logic exists to interlock the valve from closing if 24-TSHHH-375 is active. The interlock, however, is not linked to the device driver)*

Table D.4. *ANCDF and* TOCDF DFS PAS PLC Automatic Control Sequences
Advisor PC Screen: **DFV**

Device:	**DFS PAS-PUMP-106 Quench Brine Pump**
Advisor PC Tag:	X24PP106
CONR:	C112
Driver Word:	1860
Driver Type:	2
Auto start:	PAS-PUMP-106 will run in automatic if either of the following conditions are active: • PAS-PUMP-106 selected as 'primary' and the 106/107 switchover shutdown 'primary' timer has not expired (see below) • PAS-PUMP-106 selected as 'secondary' and the 106/107 switchover relay is active (see below)
I-LOCK:	This pump will be inhibited from running unless the following condition is satisfied: • Deathwish to shut down quench brine pumps relay is not active (see A&I Matrix) **Note**: Low seal water flow (24-FISL-017, on time delay) will cause PAS-PUMP-106 to shut down *(see FAWB Note B-9)*. *At AN, PAS-PUMP-106 will continue running if not selected as 'primary' pump.*
Relay:	The relay to perform a primary/secondary switchover of pumps 106/107 will be active if any of the following conditions are satisfied: • Pump selected as 'primary' is running and 24-PAL-011 is active • Pump selected as 'primary' is in 'malfunction' **Note:** Once the 106/107 switchover relay is energized, it will remain active (latched) until both pumps are placed in manual.
Timer:	Shutdown Primary Quench Brine Pump After Switchover to Secondary. This will expire after 3 seconds. The timer will become active if the primary/secondary switchover relay is active (see above) and any of the following conditions are satisfied: • Pump selected as 'secondary' is running • Timer has been activated (latch)
Device:	**PAS-PUMP-106 DFS PAS Quench Brine Pump Seal Water Valve**
Advisor PC Tag:	S24PP106
CONR:	C112
Driver Word:	1861
Driver Type:	2
Auto open:	The auto open relay for this valve is active whenever the pump start driver is active.
I-LOCK:	None. **Note:** This valve will open whenever the pump is running, whether the valve is in auto or in manual.

Table D.4. *ANCDF and* TOCDF DFS PAS PLC Automatic Control Sequences Advisor PC Screen: **DFV**

Device:	**DFS PAS-PUMP-107 Quench Brine Pump**
Advisor PC Tag:	X24PP107
CONR:	C112
Driver Word:	1862
Driver Type:	2
Auto start:	PAS-PUMP-107 will run in automatic if either of the following conditions is active: • PAS-PUMP-107 selected as 'primary' and the 106/107 switchover shutdown 'primary' timer has not expired (see below) • PAS-PUMP-107 selected as 'secondary' and the 106/107 switchover relay is active (see below)
I-LOCK:	This pump will be inhibited from running unless the following condition is satisfied: • Death wish to shut down quench brine pumps relay is not active (see A&I Matrix) **Note**: Low seal water flow (24-FISL-023, on time delay) will cause PAS-PUMP-107 to shut down *(see FAWB Note B-9)*. *At AN, PAS-PUMP-107 will continue running if not selected as 'primary' pump.*
Relay:	The relay to perform a primary/secondary switchover of pumps 106/107 will be active if any of the following conditions are satisfied: • Pump selected as 'primary' is running and 24-PAL-011 is active • Pump selected as 'primary' is in 'malfunction' **Note:** Once the 106/107 switchover relay is energized, it will remain active (latched) until both pumps are placed in manual.
Timer:	Shutdown Primary Quench Brine Pump After Switchover to Secondary. This will expire after 3 seconds. The timer will become active if the primary/secondary switchover relay is active (see above) and any of the following conditions are satisfied: • Pump selected as 'secondary' is running • Timer has been activated (latch)

Device:	**PAS-PUMP-107 DFS PAS Quench Brine Pump Seal Water Valve**
Advisor PC Tag:	S24PP107
CONR:	C112
Driver Word:	1863
Driver Type:	2
Auto open:	The auto open relay for this valve is active whenever the pump start driver is active.
I-LOCK:	None. **Note:** This valve will open whenever the pump is running, whether the valve is in auto or in manual.

Table D.4. *ANCDF and* TOCDF DFS PAS PLC Automatic Control Sequences
Advisor PC Screen: **DFV**

Device:	**24-XV-380A DFS PAS-TOWR-103 Brine to pH Analyzer 24-AIT-07A Valve**
Advisor PC Tag:	X24XY380A
CONR:	C112
Driver Word:	1864
Driver Type:	4
Auto open:	This valve will automatically open if either quench brine pump (106/107) is running.
I-LOCK:	None.
Device:	***(AN ONLY)* 24-XV-380B DFS PAS-TOWR-103 Process Water to pH Analyzer 24-AIT-07A Valve**
Advisor PC Tag:	X24XY380B
CONR:	C112
Driver Word:	1865
Driver Type:	4
Auto open:	None. This valve will close if it is placed in manual.
I-LOCK:	This valve will be inhibited from opening unless the following condition is satisfied: • 24-L*S*HH*H*-032 (scrubber sump level) is not active
Device:	**24-XV-380C DFS PAS-TOWR-103 Brine to pH Analyzer 24-AIT-07B Valve**
Advisor PC Tag:	X24XY380C
CONR:	C112
Driver Word:	1866
Driver Type:	4
Auto open:	This valve will automatically open if either quench brine pump (106/107) is running.
I-LOCK:	None.
Device:	***(AN ONLY)* 24-XV-380D DFS PAS-TOWR-103 Process Water to pH Analyzer 24-AIT-07B Valve**
Advisor PC Tag:	X24XY380D
CONR:	C112
Driver Word:	1867
Driver Type:	4
Auto open:	None. This valve will close if it is placed in manual.
I-LOCK:	This valve will be inhibited from opening unless the following condition is satisfied: • 24-L*S*HH*H*-032 (scrubber sump level) is not active

Table D.5. *ANCDF and* TOCDF DFS PAS PLC Automatic Control Sequences
Advisor PC Screen: **DFS**

Device:	**DFS PAS-PUMP-108 *at TE, PFS-PUMP-138 at AN* Clean Liquor Pump**
Advisor PC Tag:	X24PP108 *at TE, X114PP138 at AN*
CONR:	C112
Driver Word:	1660
Driver Type:	2
Auto start:	*The pump* will run in automatic if either of the following conditions is active: • PAS-PUMP-108 *at TE, PFS-PUMP-138 at AN,* selected as 'primary' and the *pump* switchover shutdown 'primary' timer has not expired (see below) • PAS-PUMP-108 *at TE, PFS-PUMP-138 at AN,* selected as 'secondary' and the *pump* switchover relay is active (see below)
I-LOCK:	This pump will be inhibited from running unless the following condition is satisfied: • Death wish to shut down clean liquors pumps relay is not active (see A&I Matrix) **Note**: Low seal water flow (24-FISL-042 *at TE, 114-FISL-332 at AN*, on time delay) will cause PAS-PUMP-108 *at TE, PFS-PUMP-138 at AN,* to shut down if it is selected as 'primary.'
Relay:	The relay to perform a primary/secondary switchover of *clean liquor* pumps will be active if any of the following conditions are satisfied: • Pump selected as 'primary' is running and 24-PAL-036 *at TE, 114-PAL-344 at AN,* is active • Pump selected as 'primary' is in 'malfunction' **Note:** Once the *pump* switchover relay is energized, it will remain active (latched) until both pumps are placed in manual.
Timer:	Shutdown Primary Clean Liquor Pump After Switchover to Secondary. This will expire after 3 seconds. The timer will become active if the primary/secondary switchover relay is active (see above) and any of the following conditions are satisfied: • Pump selected as 'secondary' is running • Timer has been activated (latch)
Device:	**PAS-PUMP-108 *at TE, PFS-PUMP-138 at AN* DFS PAS Clean Liquor Pump Seal Water Valve**
Advisor PC Tag:	S24PP108 *at TE, S114PP138 at AN*
CONR:	C112
Driver Word:	1661
Driver Type:	2
Auto open:	The auto open relay for this valve is active whenever the pump start driver is active.

Table D.5. *ANCDF and* TOCDF DFS PAS PLC Automatic Control Sequences Advisor PC Screen: **DFS**	
I-LOCK:	None. **Note:** This valve will open whenever the pump is running, whether the valve is in auto or in manual.
Device:	**DFS PAS-PUMP-109 *at TE, PFS-PUMP-139 at AN* Clean Liquor Pump**
Advisor PC Tag:	X24PP109 *at TE, X114PP139 at AN*
CONR:	C112
Driver Word:	1662
Driver Type:	2
Auto start:	*The pump* will run in automatic if either of the following conditions are active: • PAS-PUMP-109 *at TE, PFS-PUMP-139 at AN,* selected as 'primary' and the *pump* switchover shutdown 'primary' timer has not expired (see below) • PAS-PUMP-109 *at TE, PFS-PUMP-139 at AN,* selected as 'secondary' and the *pump* switchover relay is active (see below)
I-LOCK:	This pump will be inhibited from running unless the following condition is satisfied: • Death wish to shut down clean liquors pumps relay is not active (see A&I Matrix) **Note**: Low seal water flow (24-FISL-048 *at TE, 114-FISL-335 at AN*, on time delay) will cause PAS-PUMP-109 *at TE, PFS-PUMP-139 at AN,* to shut down if it is selected as 'primary.'
Relay:	The relay to perform a primary/secondary switchover of *clean liquor* pumps will be active if any of the following conditions are satisfied: • Pump selected as 'primary' is running and 24-PAL-036 *at TE, 114-PAL-344 at AN,* is active • Pump selected as 'primary' is in 'malfunction' **Note:** Once the *pump* switchover relay is energized, it will remain active (latched) until both pumps are placed in manual.
Timer:	Shutdown Primary Clean Liquor Pump After Switchover to Secondary. This will expire after 3 seconds. The timer will become active if the primary/secondary switchover relay is active (see above) and any of the following conditions are satisfied: • Pump selected as 'secondary' is running • Timer has been activated (latch)
Device:	**PAS-PUMP-109 *at TE, PFS-PUMP-139 at AN* DFS PAS Clean Liquor Pump Seal Water Valve**
Advisor PC Tag:	S24PP109 *at TE, S114PP139 at AN*

Table D.5. *ANCDF and* TOCDF DFS PAS PLC Automatic Control Sequences Advisor PC Screen: **DFS**	
CONR:	C112
Driver Word:	1663
Driver Type:	2
Auto open:	The auto open relay for this valve is active whenever the pump start driver is active.
I-LOCK:	None. There are no software interlocks inhibiting opening this valve. **Note:** This valve will open whenever the pump is running, whether the valve is in auto or in manual.
Device:	**24-XV-026 DFS PAS-SCRB-102 Process Water to Demister Pad Valve**
Advisor PC Tag:	X24XV026
CONR:	C112
Driver Word:	1664
Driver Type:	4
Auto open:	The auto open relay for this valve is active for 5 minutes every eight hours as long as 24-TV-001 (emergency quench spray) is not open and 24-L*S*HH-032 *at TE, 24-LSHHH-032 at AN,* (scrubber sump level) is not active.
I-LOCK:	This valve will be inhibited from opening unless the following conditions are satisfied: • 24-L*S*HH-032 *at TE, 24-LSHHH-032 at AN,* (scrubber sump level) is not active • 24-LAH-010 (scrubber sump level) is not active[2]
Device:	**24-XV-382A DFS PAS-SCRB-102 Liquor to pH Analyzer 24-AIT-34A Valve**
Advisor PC Tag:	X24XY382A
CONR:	C112
Driver Word:	1665
Driver Type:	4
Auto open:	This valve will automatically open if either clean liquor pump is running.
I-LOCK:	None.
Device:	***(AN ONLY)* 24-XV-382B DFS PAS-SCRB-102 Process Water to pH Analyzer 24-AIT-34A Valve**
Advisor PC Tag:	X24XY382B
CONR:	C112
Driver Word:	1666
Driver Type:	4
Auto open:	None. This valve will close if it is placed in manual.

[2] *The 24-LAH-010 interlocking condition will be deleted at follow-on sites (see FAWB Note B-19).*

Table D.5. *ANCDF and* TOCDF DFS PAS PLC Automatic Control Sequences Advisor PC Screen: **DFS**	
I-LOCK:	This valve will be inhibited from opening unless the following condition is satisfied: • 24-L*S*HH*H*-032 (scrubber sump level) is not active
Device:	**24-XV-382C DFS PAS-SCRB-102 Liquor to pH Analyzer 24-AIT-34B Valve**
Advisor PC Tag:	X24XY382C
CONR:	C112
Driver Word:	1667
Driver Type:	4
Auto open:	This valve will automatically open if either clean liquor pump is running.
I-LOCK:	None.
Device:	***(AN ONLY)* 24-XV-382D DFS PAS-SCRB-102 Process Water to pH Analyzer 24-AIT-34B Valve**
Advisor PC Tag:	X24XY382D
CONR:	C112
Driver Word:	1668
Driver Type:	4
Auto open:	None. This valve will close if it is placed in manual.
I-LOCK:	This valve will be inhibited from opening unless the following condition is satisfied: • 24-L*S*HH*H*-032 (scrubber sump level) is not active

Table D.6. *ANCDF and* TOCDF DFS PAS PLC Automatic Control Sequences Advisor PC Screen: **DFD**	
Device:	**PAS-PUMP-138 DFS PAS Demister Water Return Pump**
Advisor PC Tag:	X24PP138
CONR:	C112
Driver Word:	0661
Driver Type:	2
Auto start:	The auto start relay for this pump is always active. The pump will run any time it is in automatic PLC control and the I-Lock is satisfied *(see FAWB Note B-17)*.
I-LOCK:	The following conditions must be satisfied to allow the pump to operate: • PAS-PUMP-138 deathwish relay (see A&I Matrix) is not active
Device:	**PAS-PUMP-138 DFS PAS Demister Water Return Pump Seal Water Valve**
Advisor PC Tag:	S24PP138
CONR:	C112
Driver Word:	0662
Driver Type:	2
Auto open:	The auto open relay for this valve is active whenever the pump start driver is active.
I-LOCK:	None. **Note:** This valve will open whenever the pump is running whether the valve is in auto or in manual.
Device:	**24-XV-316 Demister Inlet Damper**
Advisor PC Tag:	X24XY316
CONR:	C112
Driver Word:	0663
Driver Type:	3
Auto open:	The damper will open, whether in manual or auto, if both of the following conditions are satisfied: • 24-XV-408 (demister bypass damper) is not open • DFS has not selected the Spare Demister
I-LOCK:	None.
Device:	**24-XV-408 Demister Bypass Damper**
Advisor PC Tag:	X24XY408
CONR:	C112
Driver Word:	0664
Driver Type:	3
Auto open:	The damper will open, whether in manual or auto, if both of the following conditions are satisfied: • 24-XV-316 (demister inlet damper) or 24-XV-409 (demister outlet damper) are not open • DFS has not selected the Spare Demister
I-LOCK:	None.

Table D.6. *ANCDF and* TOCDF DFS PAS PLC Automatic Control Sequences
Advisor PC Screen: **DFD**

Device:	**24-XV-409 Demister Outlet Damper**
Advisor PC Tag:	X24XY409
CONR:	C112
Driver Word:	0665
Driver Type:	3
Auto open:	The damper will open, whether in manual or auto, if both of the following conditions are satisfied: • 24-XV-408 (demister bypass damper) is not open • DFS has not selected the Spare Demister
I-LOCK:	None.
Device:	**PAS-PUMP-110 PAS Area Sump Pump**
Advisor PC Tag:	X24HS347
CONR:	C112
Driver Word:	0666
Driver Type:	2
Auto start:	The auto start relay for this pump will be active when the following condition is satisfied: • 24-LSHH-347 (PAS Area Sump) is active
I-LOCK:	The following conditions must be satisfied to allow the pump to operate: • HI HI Level in SDS Tanks (DICO from ICS-CONR-106) is not active
Device:	**24-HS-314 DFS/Spare Demister Selection Switch**
Advisor PC Tag:	X24HS314
CONR:	C112
Driver Word:	0667
Driver Type:	4
Auto select:	None.
I-LOCK:	DFS cannot select the spare demister if the "MPF on Spare Demister" DICO from ICS-CONR-113 is active. **Note:** When this driver is active, ICS-CONR-112 uses the Spare Demister instrumentation for control and protective relays.

Table D.7. *ANCDF and* TOCDF DFS PAS PLC Automatic Control Sequences
Advisor PC Screen: **DFI**

Device:	**24-XV-073 DFS PAS-BLOW-103 Outlet Damper**
Advisor PC Tag:	X24XY073
CONR:	C112
Driver Word:	1260
Driver Type:	3
Auto open *(TE)*:	The auto open relay will be active if any of the following conditions is satisfied: • PAS-BLOW-103A is running • PAS-BLOW-103B is running • PAS-BLOW-107 is not running with its inlet and outlet dampers open
Auto open (AN):	*The auto open relay is always active.*
I-LOCK:	None.
Device:	**24-BLOW-103A DFS PAS-BLOW-103 1st Stage Motor**
Advisor PC Tag:	X24BW103A
CONR:	C112
Driver Word:	1261
Driver Type:	1
Auto start *(TE)*:	24-BLOW-103A will run in automatic if either of the following conditions is active: • 24-BLOW-103A start driver is active • 24-BLOW-103B has been running for 60 seconds
Auto start (AN):	*24-BLOW-103A will run in automatic if either of the following conditions is active:* • *DICO from ICS-CONR-109 to start EDG critical loading is not active* • *DICO from ICS-CONR-109 to start EDG critical loading is active and PAS-BLOW-103A essential power auto start relay is active.*

I-LOCK:	The 1st stage motor will not run unless all of the following conditions are satisfied:
	• Deathwish to shut down 1st stage is not active (see A&I Matrix)
	• *(TE only)* Either lube oil pump (A/B) is running (on time delay)
	• *(TE only)* Total loss of utility power DICO from ICS-CONR-109 is not active
	· *(AN only) 16-PSLL-863, DFS-FURN –102 bypass restart line pressure, is not active*
	• Any of the following:
	  • PIC-018 (Kiln pressure controller) CV ≤ 15%
	  • PAS-BLOW-103B running
	  • PAS-BLOW-103A in manual
	  • PAS-BLOW-103A running
	  • PIC-018 (Kiln pressure controller) in manual

Table D.7. *ANCDF and* TOCDF DFS PAS PLC Automatic Control Sequences
Advisor PC Screen: **DFI**

Device:	***(TE ONLY)* 24-BLOW-103 Lube Oil System**
Advisor PC Tag:	X24LO103
CONR:	C112
Driver Word:	1262
Driver Type:	1
Auto start:	The lube oil system auto start relay is always active.
I-LOCK:	The lube oil system will not run unless the following condition is satisfied: • Deathwish to shut down the lube oil system is not active (see A&I Matrix)
Device:	**24-BLOW-103B DFS PAS-BLOW-103 2nd Stage Motor**
Advisor PC Tag:	X24BW103B
CONR:	C112
Driver Word:	1263
Driver Type:	1
Auto start *(TE)*:	The auto start relay for this blower is always active.
Auto start (AN):	*24-BLOW-103B will run in automatic if either of the following conditions is active:* • *DICO from ICS-CONR-109 to start EDG critical loading is not active* • *DICO from ICS-CONR-109 to start EDG critical loading is active and PAS-BLOW-103B essential power auto start relay is active.*

I-LOCK:	The 2nd stage motor will not run unless all of the following conditions are satisfied:
	• Deathwish to shut down 2nd stage is not active (see A&I Matrix)
	• *(TE only)* Either lube oil pump (A/B) is running (on time delay)
	• *(TE only)* Total loss of utility power DICO from ICS-CONR-109 is not active
	· *(AN only) 16-PSLL-863, DFS-FURN –102 bypass restart line pressure, is not active*
	• Any of the following:
	  • PIC-018 (Kiln pressure controller) CV ≤ 15%
	  • PAS-BLOW-103A running
	  • PAS-BLOW-103B in manual
	  • PAS-BLOW-103B running
	  • PIC-018 (Kiln pressure controller) in manual

Device:	***(TE ONLY)* 24-PY-018A Air to Pressure Control Damper PV-018 Isolation Valve**
Advisor PC Tag:	X16PY018A
CONR:	C112
Driver Word:	1264
Driver Type:	3
Auto open:	The auto open relay is always active.
I-LOCK:	None.

Table D.8. TOCDF DFS PAS PLC Automatic Control Sequences Advisor PC Screen: **DFE** (Screen DFE used by TOCDF only)	
Device:	**24-BLOW-107 DFS PAS-BLOW-107 Emergency ID Fan**
Advisor PC Tag:	X24BW107
CONR:	C112
Driver Word:	0860
Driver Type:	1
Auto start:	The auto start relay will be active if either of the following conditions is satisfied: • ID fan had been on and essential equipment restart timer window is active • PAS-BLOW-103A and PAS-BLOW-103B both not running and DFS Afterburner temperature (16-TIC-092) > 1000 °F **Note**: Once the auto start relay is set, it remains latched until the blower is manually stopped, malfunctions, or the CON E-stop is active.
I-LOCK:	The following conditions must be satisfied to allow the blower to operate: • CON E-stop is not active • Blower inlet (XV-955) and outlet (XV-956) both closed or PAS-BLOW-107 start driver active
Device:	**24-XV-955 DFS PAS-BLOW-107 Inlet Damper**
Advisor PC Tag:	X24XY955
CONR:	C112
Driver Word:	0861
Driver Type:	3 (Fail open, driver active to close)
Auto close:	The auto close relay will be active if either of the following conditions is satisfied: • PAS-BLOW-107 not running • 24-PSH-959 (ID fan inlet pressure) not active and PAS-BLOW-103A and PAS-BLOW-103B both not running • 24-PSH-959 (ID fan inlet pressure) not active (on time delay)
I-LOCK:	None.

Table D.8. TOCDF DFS PAS PLC Automatic Control Sequences
Advisor PC Screen: **DFE**
(Screen DFE used by TOCDF only)

Device:	**24-XV-956 DFS PAS-BLOW-107 Outlet Damper**
Advisor PC Tag:	X24XY950
CONR:	C112
Driver Word:	0862
Driver Type:	3 (Fail open, driver active to close)
Auto close:	The auto close relay will be active if either of the following conditions is satisfied: • PAS-BLOW-107 not running • 24-PSH-959 (ID fan inlet pressure) not active and PAS-BLOW-103A and PAS-BLOW-103B both not running • 24-PSH-959 (ID fan inlet pressure) not active (on time delay)
I-LOCK:	None.

Table D.9. *ANCDF and* TOCDF LIC PAS PLC Automatic Control Sequences Advisor PC Screen: **LQ1 [LQ2]**

Device:	**24-TV-089 [24-TV-800] LIC#1 [LIC#2] PAS-TOWR-104 [PAS-TOWR-204] Emergency Quench Valve**
Advisor PC Tag:	X24TY089 [X24TY800]
CONR:	C114 *[C119 (C114 for ANCDF only)]*
Driver Word:	1461 [1461]
Driver Type:	3
Auto open:	The auto open relay will be active if any of the following conditions is satisfied: • 24-TSHH-089 [24-TSHH-800] (quench tower exhaust temperature) is active *(See FAWB Note B-7)* • *(TE only)* 24-TAHH-397 [24-TAHH-816] (quench tower exhaust temperature) is active • *(TE only)* 24-TAHHH-397 [24-TAHHH-816] (quench tower exhaust temperature) is active • Test Timer is active (15 seconds every morning at 5:10 a.m. [5:20 a.m.] if either chamber burner is lit and 13-TIC-615 [13-TIC-715] indicates at least 1000 °F) *(See FAWB Note B-8).*
I-LOCK:	None.
Device:	**24-XV-062 [24-XV-807] LIC#1 [LIC#2] PAS-TOWR-104 [PAS-TOWR-204] Water From PAS-TANK-103 Valve**
Advisor PC Tag:	X24XY062 [X24XY807]
CONR:	C114 *[C119 (C114 for ANCDF only)]*
Driver Word:	1462 [1462]
Driver Type:	4
Auto open:	The auto open relay will be active if both of the following conditions are satisfied: • LIC#1 [LIC#2] PAS Normal relay (see below) is active • "Recovered Water Available" DICO from ICS-CONR-113 is active
I-LOCK:	The following condition must be satisfied for this valve to open: • *(TE)* 24-LAHH-114 [24-LAHH-819] (PAS-SCRB-103 [PAS-SCRB-203] sump level) not active · *(AN) [24-LSHHH-819] ([PAS-SCRB-203] sump level) not active*
Relay:	The 'LIC#1 [LIC#2] PAS Normal relay will be active if all of the following conditions are satisfied: • Either clean liquor pump is running (*TE:*PAS-PUMP-113/114 [PAS-PUMP-213/214], *AN: [PFS-PUMP-234/235]*) • Either quench brine pump is running (PAS-PUMP-111/112 [PAS-PUMP-211/212]) • *(TE)* PAS-SCRB-103 [PAS-SCRB-203] Sump level is not *high* (24-LAHH-114 [24-LAHH-819] or 24-LAH-115 [24-LAH-818] not active) · *(AN) [PAS-SCRB-203] sump level is not high ([24-LSHHH-819] or [24-LAH-818] not active)*

Table D.9. *ANCDF and* TOCDF LIC PAS PLC Automatic Control Sequences Advisor PC Screen: **LQ1 [LQ2]**
• *(TE)* PAS-SCRB-103 [PAS-SCRB-203] Sump level is not *low* (24-LALL-099 [24-LALL-820] or 24-LAL-115 [24-LAL-818] not active) · *(AN) [PAS-SCRB-203] sump level is not low ([24-LSLLL-820] or [24-LAL-818] not active)* · *Quench Tower (PAS-TOWR-104 [PAS-TOWR-204]) level not HI HI (24-LAHH-132 [24-LAHH-810])* • Quench Tower (PAS-TOWR-104 [PAS-TOWR-204]) Exhaust Temperature HI HI HI is not active (24-TSHHH-396 [24-TSHHH-817] not active) • PAS-DMIS-101 [PAS-DMIS-201] Level is not HI HI (24-LSHH-146 [24-LSHH-866]) or LIC#1 [LIC#2] is aligned to the Spare Demister • PAS-DMIS-102 (Spare Demister) Level is not HI HI (24-LSHH-163) or LIC#1 [LIC#2] is aligned to the LIC#1 [LIC#2] Demister • Either stage of the ID fan is running (PAS-BLOW-104A/104B [PAS-BLOW-204A/204B])

Table D.10. *ANCDF and* TOCDF LIC PAS PLC Automatic Control Sequences Advisor PC Screen: **LV1 [LV2]**	
Device:	**LIC#1 [LIC#2] PAS-PUMP-111 [PAS-PUMP-211] Quench Brine Pump**
Advisor PC Tag:	X24PMP111 [X24PMP211]
CONR:	C114 *[C119 (C114 for ANCDF only)]*
Driver Word:	1860 [1860]
Driver Type:	2
Auto start:	PAS-PUMP-111 [PAS-PUMP-211] will run in automatic if either of the following conditions are active: • PAS-PUMP-111 [PAS-PUMP-211] selected as 'primary' and the 111/112 [211/212] switchover shutdown 'primary' timer has not expired (see below) • PAS-PUMP-111 [PAS-PUMP-211] selected as 'secondary' and the 111/112 [211/212] switchover relay is active (see below)
I-LOCK:	This pump will be inhibited from running unless the following condition is satisfied: • Deathwish to shut down quench brine pumps relay is not active (see A&I Matrix) **Note**: Low seal water flow (24-FISL-098 [24-FISL-841], on time delay) will cause PAS-PUMP-111 [PAS-PUMP-211] to shut down if it is selected as 'primary.'
Relay:	The relay to perform a primary/secondary switchover of pumps 111/112 [211/212] will be active if any of the following conditions are satisfied: • Pump selected as 'primary' is running and 24-PAL-100 [24-PAL-838] is active • Pump selected as 'primary' is in 'malfunction' **Note:** Once the 111/112 [211/212] switchover relay is energized, it will remain active (latched) until both pumps are placed in manual.
Timer:	Shutdown Primary Quench Brine Pump After Switchover to Secondary. This will expire after 3 seconds. The timer will become active if the primary/secondary switchover relay is active (see above) and any of the following conditions are satisfied: • Pump selected as 'secondary' is running • Timer has been activated (latch)
Device:	**PAS-PUMP-111 [PAS-PUMP-211] LIC#1 [LIC#2] PAS Quench Brine Pump Seal Water Valve**
Advisor PC Tag:	S24PMP111 [S24PMP211]
CONR:	C114 *[C119 (C114 for ANCDF only)]*
Driver Word:	1861 [1861]

Table D.10. *ANCDF and* TOCDF LIC PAS PLC Automatic Control Sequences Advisor PC Screen: **LV1 [LV2]**	
Driver Type:	2
Auto open:	The auto open relay for this valve is active whenever the pump start driver is active.
I-LOCK:	None. **Note:** This valve will open whenever the pump is running, whether the valve is in auto or in manual.
Device:	**LIC#1 [LIC#2] PAS-PUMP-112 [PAS-PUMP-212] Quench Brine Pump**
Advisor PC Tag:	X24PMP112 [X24PMP212]
CONR:	C114 *[C119 (C114 for ANCDF only)]*
Driver Word:	1862 [1862]
Driver Type:	2
Auto start:	PAS-PUMP-112 [PAS-PUMP-212] will run in automatic if either of the following conditions are active: • PAS-PUMP-112 [PAS-PUMP-212] selected as 'primary' and the 111/112 [211/212] switchover shutdown 'primary' timer has not expired (see below) • PAS-PUMP-112 [PAS-PUMP-212] selected as 'secondary' and the 111/112 [211/212] switchover relay is active (see below)
I-LOCK:	This pump will be inhibited from running unless the following condition is satisfied: • Death wish to shut down quench brine pumps relay is not active (see A&I Matrix) **Note**: Low seal water flow (24-FISL-106 [24-FISL-845], on time delay) will cause PAS-PUMP-112 [PAS-PUMP-212] to shut down if it is selected as 'primary.'
Relay:	The relay to perform a primary/secondary switchover of pumps 111/112 [211/212] will be active if any of the following conditions are satisfied: • Pump selected as 'primary' is running and 24-PAL-100 [24-PAL-838] is active • Pump selected as 'primary' is in 'malfunction' **Note:** Once the 111/112 [211/212] switchover relay is energized, it will remain active (latched) until both pumps are placed in manual.
Timer:	Shutdown Primary Quench Brine Pump After Switchover to Secondary. This will expire after 3 seconds. The timer will become active if the primary/secondary switchover relay is active (see above) and any of the following conditions are satisfied: • Pump selected as 'secondary' is running • Timer has been activated (latch)

Table D.10. *ANCDF and* TOCDF LIC PAS PLC Automatic Control Sequences Advisor PC Screen: **LV1 [LV2]**

Device:	**PAS-PUMP-112 [PAS-PUMP-212] LIC#1 [LIC#2] PAS Quench Brine Pump Seal Water Valve**
Advisor PC Tag:	S24PMP112 [S24PMP212]
CONR:	C114 *[C119 (C114 for ANCDF only)]*
Driver Word:	1863 [1863]
Driver Type:	2
Auto open:	The auto open relay for this valve is active whenever the pump start driver is active.
I-LOCK:	None.
	Note: This valve will open whenever the pump is running, whether the valve is in auto or in manual.

Table D.11. *ANCDF and* TOCDF LIC PAS PLC Automatic Control Sequences Advisor PC Screen: **LS1 [LS2]**	
Device:	**LIC#1 [LIC#2] PAS-PUMP-113 [PAS-PUMP-213]** ***at TE, [PFS-PUMP-234] at AN,*** **Clean Liquor Pump**
Advisor PC Tag:	X24PMP113 [X24PMP213] *at TE, [X114PP234] at AN*
CONR:	C114 *[C119 (C114 for ANCDF only)]*
Driver Word:	1660 [1660]
Driver Type:	2
Auto start:	*The pump* will run in automatic if either of the following conditions is active: • PAS-PUMP-113 [PAS-PUMP-213] *at TE, [PFS-PUMP-234] at AN,* selected as 'primary' and the *pump* switchover shutdown 'primary' timer has not expired (see below) • PAS-PUMP-113 [PAS-PUMP-213] *at TE, [PFS-PUMP-234] at AN,* selected as 'secondary' and the *pump* switchover relay is active (see below)
I-LOCK:	This pump will be inhibited from running unless the following condition is satisfied: • Death wish to shut down clean liquors pumps relay is not active (see A&I Matrix) **Note**: Low seal water flow (24-FISL-124 [24-FISL-849] *at TE, [114-FISL-176] at AN*,, on time delay) will cause PAS-PUMP-113 [PAS-PUMP-213] *at TE, [PFS-PUMP-234] at AN,* to shut down if it is selected as 'primary.'
Relay:	The relay to perform a primary/secondary switchover of *clean liqour* pumps will be active if any of the following conditions are satisfied: • Pump selected as 'primary' is running and 24-PAL-129 [24-PAL-839] *at TE, [114-PAL-170] at AN,* is active • Pump selected as 'primary' is in 'malfunction' **Note:** Once the *pump* switchover relay is energized, it will remain active (latched) until both pumps are placed in manual.
Timer:	Shutdown Primary Clean Liquor Pump After Switchover to Secondary. This will expire after 3 seconds. The timer will become active if the primary/secondary switchover relay is active (see above) and any of the following conditions are satisfied: • Pump selected as 'secondary' is running • Timer has been activated (latch)
Device:	**PAS-PUMP-113 [PAS-PUMP-213]** ***at TE, [PFS-PUMP-234] at AN,*** **LIC#1 [LIC#2] PAS Clean Liquor Pump Seal Water Valve**
Advisor PC Tag:	S24PMP113 [S24PMP213] *at TE, [S114PP234] at AN*
CONR:	C114 *[C119 (C114 for ANCDF only)]*
Driver Word:	1661 [1661]

Table D.11. *ANCDF and* TOCDF LIC PAS PLC Automatic Control Sequences Advisor PC Screen: **LS1 [LS2]**	
Driver Type:	2
Auto open:	The auto open relay for this valve is active whenever the pump start driver is active.
I-LOCK:	None. **Note:** This valve will open whenever the pump is running, whether the valve is in auto or in manual.
Device:	**LIC#1 [LIC#2] PAS-PUMP-114 [PAS-PUMP-214]** ***at TE, [PFS-PUMP-235] at AN,*** **Clean Liquor Pump**
Advisor PC Tag:	X24PMP114 [X24PMP214] ***at TE, [X114PP235] at AN***
CONR:	C114 *[C119 (C114 for ANCDF only)]*
Driver Word:	1662 [1662]
Driver Type:	2
Auto start:	*The pump* will run in automatic if either of the following conditions are active: • PAS-PUMP-114 [PAS-PUMP-214] *at TE, [PFS-PUMP-235] at AN.* selected as 'primary' and the *pump* switchover shutdown 'primary' timer has not expired (see below) • PAS-PUMP-114 [PAS-PUMP-214] *at TE, [PFS-PUMP-235] at AN,* selected as 'secondary' and the *pump* switchover relay is active (see below)
I-LOCK:	This pump will be inhibited from running unless the following condition is satisfied: • Death wish to shut down clean liquors pumps relay is not active (see A&I Matrix) **Note**: Low seal water flow (24-FISL-131 [24-FISL-852] *at TE, [114-FISL-182] at AN*, on time delay) will cause PAS-PUMP-114 [PAS-PUMP-214] *at TE, [PFS-PUMP-235] at AN,* to shut down if it is selected as 'primary.'
Relay:	The relay to perform a primary/secondary switchover of *clean liquor* pumps will be active if any of the following conditions are satisfied: • Pump selected as 'primary' is running and 24-PAL-129 [24-PAL-839] *at TE, [114-PAL-170] at AN,* is active • Pump selected as 'primary' is in 'malfunction' **Note:** Once the *pump* switchover relay is energized, it will remain active (latched) until both pumps are placed in manual.
Timer:	Shutdown Primary Clean Liquor Pump After Switchover to Secondary. This will expire after 3 seconds. The timer will become active if the primary/secondary switchover relay is active (see above) and any of the following conditions are satisfied: • Pump selected as 'secondary' is running • Timer has been activated (latch)

Table D.11. *ANCDF and* TOCDF LIC PAS PLC Automatic Control Sequences
Advisor PC Screen: **LS1 [LS2]**

Device:	**PAS-PUMP-114 [PAS-PUMP-214]** ***at TE, [PFS-PUMP-235] at AN,*** **LIC#1 [LIC#2] PAS Clean Liquor Pump Seal Water Valve**
Advisor PC Tag:	S24PMP114 [S24PMP214] ***at TE, [S114PP235] at AN***
CONR:	C114 *[C119 (C114 for ANCDF only)]*
Driver Word:	1663 [1663]
Driver Type:	2
Auto open:	The auto open relay for this valve is active whenever the pump start driver is active.
I-LOCK:	None. There are no software interlocks inhibiting opening this valve. **Note:** This valve will open whenever the pump is running, whether the valve is in auto or in manual.
Device:	**24-XV-092 [24-XV-798] LIC#1 [LIC#2] PAS-SCRB-103 [PAS-SCRB-203] Process Water to Demister Pad Valve**
Advisor PC Tag:	X24XV092 [X24XV798]
CONR:	C114 *[C119 (C114 for ANCDF only)]*
Driver Word:	1664 [1664]
Driver Type:	4
Auto open:	The auto open relay for this valve is active for 1 minute every eight hours that either chamber burner is lit as long as 24-TV-089 [24-TV-800] (emergency quench spray) is not open and, 24-L*S*HH-114 [24-L*S*HH-819] *at TE, [24-LSHHH-819] at AN,* (scrubber sump level) is not active.
I-LOCK:	This valve will be inhibited from opening unless the following conditions are satisfied: • 24-L*S*HH-114 [24-L*S*HH-819] *at TE, [24-LSHHH-819] at AN,* (scrubber sump level) is not active • 24-LAH-115 [24-LAH-818] (scrubber sump level) is not active[3]
Device:	**24-XV-413A [24-XV-834A] LIC#1 [LIC#2] PAS-SCRB-103 [PAS-SCRB-203] Liquor to Ph Analyzer 24-AIT-116A [24-AIT-832A] Valve**
Advisor PC Tag:	X24XY413A [X24XY834A]
CONR:	C114 *[C119 (C114 for ANCDF only)]*
Driver Word:	1665 [1665]
Driver Type:	4
Auto open:	This valve will automatically open if either clean liquor pump is running.
I-LOCK:	None.

[3] *The 24-LAH-115 [24-LAH-818] interlocking condition will be deleted at follow-on sites (see FAWB Note B-19).*

Table D.11. *ANCDF and* TOCDF LIC PAS PLC Automatic Control Sequences Advisor PC Screen: **LS1 [LS2]**	
Device:	***(AN ONLY) [24-XV-834B] LIC [PAS-SCRB-203] Process Water to pH Analyzer [24-AIT-832A] Valve***
Advisor PC Tag:	*[X24XY834B]*
CONR:	*C114*
Driver Word:	*1666*
Driver Type:	*4*
Auto open:	*None. This valve will close if it is placed in manual.*
I-LOCK:	*This valve will be inhibited from opening unless the following condition is satisfied:* · *[24-LSHHH-819] (scrubber sump level) is not active*
Device:	**24-XV-413C [24-XV-834C] LIC#1 [LIC#2] PAS-SCRB-103 [PAS-SCRB-203] Liquor to Ph Analyzer 24-AIT-116B [24-AIT-832B] Valve**
Advisor PC Tag:	X24XY413C [X24XY834C]
CONR:	C114 *[C119 (C114 for ANCDF only)]*
Driver Word:	1667 [1667]
Driver Type:	4
Auto open:	This valve will automatically open if either clean liquor pump is running.
I-LOCK:	None.
Device:	***(AN ONLY) [24-XV-834D] LIC [PAS-SCRB-203] Process Water to pH Analyzer [24-AIT-832B] Valve***
Advisor PC Tag:	*[X24XY834D]*
CONR:	*C114*
Driver Word:	*1668*
Driver Type:	*4*
Auto open:	*None. This valve will close if it is placed in manual.*
I-LOCK:	*This valve will be inhibited from opening unless the following condition is satisfied:* • *[24-LSHHH-819] (scrubber sump level) is not active*

Table D.12. *ANCDF and* TOCDF LIC PAS PLC Automatic Control Sequences
Advisor PC Screen: **LD1 [LD2]**

Device:	**PAS-PUMP-136 [PAS-PUMP-222] LIC#1 [LIC#2] PAS Demister Water Return Pump**
Advisor PC Tag:	X24PMP136 [X24PMP222]
CONR:	C114 *[C119 (C114 for ANCDF only)]*
Driver Word:	0661 [0661]
Driver Type:	2
Auto start:	The auto start relay for this pump is always active. The pump will run any time it is in automatic PLC control and the I-Lock is satisfied *(see FAWB Note B-17)*.
I-LOCK:	The following conditions must be satisfied to allow the pump to operate: • PAS-PUMP-136 [PAS-PUMP-222] deathwish relay (see A&I Matrix) is not active
Device:	**PAS-PUMP-136 [PAS-PUMP-222] LIC#1 [LIC#2] PAS Demister Water Return Pump Seal Water Valve**
Advisor PC Tag:	S24PMP136 [S24PMP222]
CONR:	C114 *[C119 (C114 for ANCDF only)]*
Driver Word:	0662 [0662]
Driver Type:	2
Auto open:	The auto open relay for this valve is active whenever the pump start driver is active.
I-LOCK:	None. **Note:** This valve will open whenever the pump is running whether the valve is in auto or in manual.
Device:	**24-HS-143 [24-HS-864] LIC#1 [LIC#2]/Spare Demister Selection Switch**
Advisor PC Tag:	X24HS143 [X24HS864]
CONR:	C114 *[C119 (C114 for ANCDF only)]*
Driver Word:	0663 [0663]
Driver Type:	4
Auto open:	None.
I-LOCK:	LIC#1 [LIC#2] cannot select the spare demister if the "LIC#2 on Spare Demister" DICO from ICS-CONR-119 [ICS-CONR-114] is active. **Note:** When this driver is active, ICS-CONR-114 [ICS-CONR-119] uses the Spare Demister instrumentation for control and protective relays.

Table D.13. *ANCDF and* TOCDF LIC PAS PLC Automatic Control Sequences Advisor PC Screen: **LI1 [LI2]**	
Device:	**24-XV-074 [24-XV-715] LIC#1 [LIC#2] PAS-BLOW-104 [PAS-BLOW-204] Outlet Damper**
Advisor PC Tag:	X24XY074 [X24XY715]
CONR:	C114 *[C119 (C114 for ANCDF only)]*
Driver Word:	1260 [1260]
Driver Type:	3 (Fail open, driver active to close)
Auto close:	None. If the damper is in automatic, it will open.
I-LOCK:	None.
Device:	**24-BLOW-104A [24-BLOW-204A] LIC#1 [LIC#2] PAS-BLOW-104 [PAS-BLOW-204] 1st Stage Motor**
Advisor PC Tag:	X24BL104A [X24BL204A]
CONR:	C114 *[C119 (C114 for ANCDF only)]*
Driver Word:	1261 [1261]
Driver Type:	1
Auto start *(TE)*:	24-BLOW-104A [24-BLOW-204A] will run in automatic if either of the following conditions is active: • 24-BLOW-104A [24-BLOW-204A] is running (latch) • 24-BLOW-104B [24-BLOW-204B] has been running for 60 [65] seconds
Auto start (AN):	*[24-BLOW-204A] will run in automatic if either of the following conditions is active:* • *DICO from ICS-CONR-109 to start EDG critical loading is not active* • *DICO from ICS-CONR-109 to start EDG critical loading is active and [PAS-BLOW-204A] essential power auto start relay is active.*
I-LOCK:	The 1st stage motor will not run unless all of the following conditions are satisfied: • Deathwish to shut down both stages is not active (see A&I Matrix) • Deathwish to shut down 1st stage is not active (see A&I Matrix) • *(TE only)* Either lube oil pump (A/B) is running (on time delay) • *(TE only)* Total loss of utility power DICO from ICS-CONR-109 is not active
Device:	***(TE ONLY)* PAS-BLOW-104 [PAS-BLOW-204] Lube Oil System**
Advisor PC Tag:	X24LS104 [X24LS204]
CONR:	C114 *[C119 (C114 for ANCDF only)]*
Driver Word:	1262 [1262]
Driver Type:	1
Auto start:	The lube oil system auto start relay is always active.
I-LOCK:	The lube oil system will not run unless the following condition is satisfied: • Deathwish to shut down the lube oil system is not active (see A&I Matrix)

Table D.13. *ANCDF and* TOCDF LIC PAS PLC Automatic Control Sequences Advisor PC Screen: **LI1 [LI2]**	
Device:	**24-BLOW-104B [24-BLOW-204B] LIC#1 [LIC#2] PAS-BLOW-104 [PAS-BLOW-204] 2nd Stage Motor**
Advisor PC Tag:	X24BL104B [X24BL204B]
CONR:	C114 *[C119 (C114 for ANCDF only)]*
Driver Word:	1263 [1263]
Driver Type:	1
Auto start *(TE)*:	The auto start relay for this blower is always active.
Auto start (AN):	*[24-BLOW-204B] will run in automatic if either of the following conditions is active:* • *DICO from ICS-CONR-109 to start EDG critical loading is not active* • *DICO from ICS-CONR-109 to start EDG critical loading is active and [PAS-BLOW-204B] essential power auto start relay is active.*
I-LOCK:	All of the following conditions must be satisfied for this blower to operate: • Deathwish to shut down both stages is not active (see A&I Matrix) • Deathwish to shut down 2nd stage is not active (see A&I Matrix) • *(TE only)* Either lube oil pump (A/B) running (on time delay) • *(TE only)* 24-XV-074 [24-XV-715] is open, 2nd stage motor start driver is active (on time delay), or 2nd stage motor is in manual • *(TE only)* Total loss of utility power DICO from ICS-CONR-109 is not active

Table D.14 *ANCDF and* TOCDF MPF PAS PLC Automatic Control Sequences Advisor PC Screen: **MPQ**	
Device:	**24-TV-223 MPF PAS-TOWR-102 Emergency Quench Valve**
Advisor PC Tag:	X24TY223
CONR:	C113
Driver Word:	1461
Driver Type:	3
Auto open:	The auto open relay will be active if any of the following conditions is satisfied: • 24-TSHH-223 (quench tower exhaust temperature) is active *(See FAWB Note B-7)* • 24-TAHH-509[4] (quench tower exhaust temperature) is active • 24-TAHHH-509[4] (quench tower exhaust temperature) is active • Test Timer is active (15 seconds every morning at 5:00 a.m. if either afterburner is lit and 16-TIT-087 indicates at least 1000 °F) *(See FAWB Note B-8).*
I-LOCK:	None.

[4] *24-TAHH-509 and 24-TAHHH-509 are alarms at TOCDF only. Logic associated with these alarms will be removed from follow-on site code.*

Table D.15. *ANCDF and* TOCDF MPF PAS PLC Automatic Control Sequences Advisor PC Screen: **MPV**	
Device:	**MPF PAS-PUMP-102 Quench Brine Pump**
Advisor PC Tag:	X24PP102
CONR:	C113
Driver Word:	1860
Driver Type:	2
Auto start:	PAS-PUMP-102 will run in automatic if either of the following conditions are active: • PAS-PUMP-102 selected as 'primary' and the 102/103 switchover shutdown 'primary' timer has not expired (see below) • PAS-PUMP-102 selected as 'secondary' and the 102/103 switchover relay is active (see below)
I-LOCK:	This pump will be inhibited from running unless the following condition is satisfied: • Deathwish to shut down quench brine pumps relay is not active (see A&I Matrix) **Note**: Low seal water flow (24-FISL-231, on time delay) will cause PAS-PUMP-102 to shut down if it is selected as 'primary.'
Relay:	The relay to perform a primary/secondary switchover of pumps 102/103 will be active if any of the following conditions are satisfied: • Pump selected as 'primary' is running and 24-PAL-233 is active • Pump selected as 'primary' is in 'malfunction' **Note:** Once the 102/103 switchover relay is energized, it will remain active (latched) until both pumps are placed in manual.
Timer:	Shutdown Primary Quench Brine Pump After Switchover to Secondary. This will expire after 3 seconds. The timer will become active if the primary/secondary switchover relay is active (see above) and any of the following conditions are satisfied: • Pump selected as 'secondary' is running • Timer has been activated (latch)
Device:	**PAS-PUMP-102 MPF PAS Quench Brine Pump Seal Water Valve**
Advisor PC Tag:	S24PP102
CONR:	C113
Driver Word:	1861
Driver Type:	2
Auto open:	The auto open relay for this valve is active whenever the pump start driver is active.
I-LOCK:	None. **Note:** This valve will open whenever the pump is running, whether the valve is in auto or in manual.

Table D.15. *ANCDF and* TOCDF MPF PAS PLC Automatic Control Sequences Advisor PC Screen: **MPV**	
Device:	**MPF PAS-PUMP-103 Quench Brine Pump**
Advisor PC Tag:	X24PP103
CONR:	C113
Driver Word:	1862
Driver Type:	2
Auto start:	PAS-PUMP-103 will run in automatic if either of the following conditions are active: • PAS-PUMP-103 selected as 'primary' and the 102/103 switchover shutdown 'primary' timer has not expired (see below) • PAS-PUMP-103 selected as 'secondary' and the 102/103 switchover relay is active (see below)
I-LOCK:	This pump will be inhibited from running unless the following condition is satisfied: • Death wish to shut down quench brine pumps relay is not active (see A&I Matrix) **Note**: Low seal water flow (24-FISL-238, on time delay) will cause PAS-PUMP-103 to shut down if it is selected as 'primary.'
Relay:	The relay to perform a primary/secondary switchover of pumps 102/103 will be active if any of the following conditions are satisfied: • Pump selected as 'primary' is running and 24-PAL-233 is active • Pump selected as 'primary' is in 'malfunction' **Note:** Once the 102/103 switchover relay is energized, it will remain active (latched) until both pumps are placed in manual.
Timer:	Shutdown Primary Quench Brine Pump After Switchover to Secondary. This will expire after 3 seconds. The timer will become active if the primary/secondary switchover relay is active (see above) and any of the following conditions are satisfied: • Pump selected as 'secondary' is running • Timer has been activated (latch)
Device:	**PAS-PUMP-103 MPF PAS Quench Brine Pump Seal Water Valve**
Advisor PC Tag:	S24PP112
CONR:	C113
Driver Word:	1863
Driver Type:	2
Auto open:	The auto open relay for this valve is active whenever the pump start driver is active.
I-LOCK:	None.
Note:	This valve will open whenever the pump is running, whether the valve is in auto or in manual.

Table D.15. *ANCDF and* TOCDF MPF PAS PLC Automatic Control Sequences Advisor PC Screen: **MPV**	
Device:	***(AN ONLY) 24-XV-264A MPF PAS-TOWR-102 Brine to pH Analyzer 24-AIT-224A Valve***
Advisor PC Tag:	*X24XY264A*
CONR:	*C113*
Driver Word:	*1864*
Driver Type:	*4*
Auto open:	*This valve will automatically open if either quench brine pump is running.*
I-LOCK:	*None.*
Device:	***(AN ONLY) 24-XV-264B MPF PAS-TOWR-102 Process Water to pH Analyzer 24-AIT-224A Valve***
Advisor PC Tag:	*X24XY264B*
CONR:	*C113*
Driver Word:	*1865*
Driver Type:	*4*
Auto open:	*None. This valve will close if it is placed in manual.*
I-LOCK:	*This valve will be inhibited from opening unless the following condition is satisfied:* • *24-LSHHH-244 (scrubber sump level) is not active*
Device:	***(AN ONLY) 24-XV-264C MPF PAS-TOWR-102 Brine to pH Analyzer 24-AIT-224B Valve***
Advisor PC Tag:	*X24XY264C*
CONR:	*C113*
Driver Word:	*1866*
Driver Type:	*4*
Auto open:	*This valve will automatically open if either quench brine pump is running.*
I-LOCK:	*None.*
Device:	***(AN ONLY) 24-XV-264D MPF PAS-TOWR-102 Process Water to pH Analyzer 24-AIT-224B Valve***
Advisor PC Tag:	*X24XY264D*
CONR:	*C113*
Driver Word:	*1867*
Driver Type:	*4*
Auto open:	*None. This valve will close if it is placed in manual.*
I-LOCK:	*This valve will be inhibited from opening unless the following condition is satisfied:* • *24-LSHHH-244 (scrubber sump level) is not active*

Table D.16. *ANCDF and* TOCDF MPF PAS PLC Automatic Control Sequences Advisor PC Screen: **MPS**

Device:	**MPF PAS-PUMP-104 *at TE, PFS-PUMP-136 at AN,* Clean Liquor Pump**
Advisor PC Tag:	X24PP104 *at TE, tag TBD at AN*
CONR:	C113
Driver Word:	1660
Driver Type:	2
Auto start:	*The pump* will run in automatic if either of the following conditions is active: • PAS-PUMP-104 *at TE, PFS-PUMP-136 at AN,* selected as 'primary' and the *pump* switchover shutdown 'primary' timer has not expired (see below) • PAS-PUMP-104 *at TE, PFS-PUMP-136 at AN,* selected as 'secondary' and the *pump* switchover relay is active (see below)
I-LOCK:	This pump will be inhibited from running unless the following condition is satisfied: • Death wish to shut down clean liquors pumps relay is not active (see A&I Matrix) **Note**: Low seal water flow (24-FISL-256 *at TE, 114-FISL-356 at AN*, on time delay) will cause PAS-PUMP-104 *at TE, PFS-PUMP-136 at AN,* to shut down if it is selected as 'primary.'
Relay:	The relay to perform a primary/secondary switchover of *clean liquor* pumps will be active if any of the following conditions are satisfied: • Pump selected as 'primary' is running and 24-PAL-258 *at TE, 114-PAL-358 at AN,* is active • Pump selected as 'primary' is in 'malfunction' **Note:** Once the *pump* switchover relay is energized, it will remain active (latched) until both pumps are placed in manual.
Timer:	Shutdown Primary Clean Liquor Pump After Switchover to Secondary. This will expire after 3 seconds. The timer will become active if the primary/secondary switchover relay is active (see above) and any of the following conditions are satisfied: • Pump selected as 'secondary' is running • Timer has been activated (latch)
Device:	**PAS-PUMP-104 *at TE, PFS-PUMP-136 at AN,* MPF PAS Clean Liquor Pump Seal Water Valve**
Advisor PC Tag:	S24PP104 *at TE, tag TBD at AN*
CONR:	C113
Driver Word:	1661
Driver Type:	2
Auto open:	The auto open relay for this valve is active whenever the pump start driver is active.

Table D.16. *ANCDF and* TOCDF MPF PAS PLC Automatic Control Sequences Advisor PC Screen: **MPS**	
I-LOCK:	None. **Note:** This valve will open whenever the pump is running, whether the valve is in auto or in manual.
Device:	**MPF PAS-PUMP-105 *at TE, PFS-PUMP-137 at AN,* Clean Liquor Pump**
Advisor PC Tag:	X24PP105 *at TE, tag TBD at AN*
CONR:	C113
Driver Word:	1662
Driver Type:	2
Auto start:	*The pump* will run in automatic if either of the following conditions are active: • PAS-PUMP-105 *at TE, PFS-PUMP-137 at AN,* selected as 'primary' and the *pump* switchover shutdown 'primary' timer has not expired (see below) • PAS-PUMP-105 *at TE, PFS-PUMP-137 at AN,* selected as 'secondary' and the *pump* switchover relay is active (see below)
I-LOCK:	This pump will be inhibited from running unless the following condition is satisfied: • Death wish to shut down clean liquors pumps relay is not active (see A&I Matrix) **Note**: Low seal water flow (24-FISL-263 *at TE, 114-FISL-363 at AN*, on time delay) will cause PAS-PUMP-104 *at TE, PFS-PUMP-137 at AN,* to shut down if it is selected as 'primary.'
Relay:	The relay to perform a primary/secondary switchover of *clean liquor* pumps will be active if any of the following conditions are satisfied: • Pump selected as 'primary' is running and 24-PAL-258 *at TE, 114-PAL-358 at AN,* is active • Pump selected as 'primary' is in 'malfunction' **Note:** Once the *pump* switchover relay is energized, it will remain active (latched) until both pumps are placed in manual.
Timer:	Shutdown Primary Clean Liquor Pump After Switchover to Secondary. This will expire after 3 seconds. The timer will become active if the primary/secondary switchover relay is active (see above) and any of the following conditions are satisfied: • Pump selected as 'secondary' is running • Timer has been activated (latch)
Device:	**PAS-PUMP-105 *at TE, PFS-PUMP-137 at AN,* MPF PAS Clean Liquor Pump Seal Water Valve**
Advisor PC Tag:	S24PP105 *at TE, tag TBD at AN*
CONR:	C113

Table D.16. *ANCDF and* TOCDF MPF PAS PLC Automatic Control Sequences Advisor PC Screen: **MPS**	
Driver Word:	1663
Driver Type:	2
Auto open:	The auto open relay for this valve is active whenever the pump start driver is active.
I-LOCK:	None. There are no software interlocks inhibiting opening this valve. **Note:** This valve will open whenever the pump is running, whether the valve is in auto or in manual.
Device:	**24-XV-226 MPF PAS-SCRB-101 Process Water to Demister Pad Valve**
Advisor PC Tag:	X24XV226
CONR:	C113
Driver Word:	1664
Driver Type:	4
Auto open:	The auto open relay for this valve is active for 1 minute every eight hours that a burner is lit as long as 24-TV-223 (emergency quench spray) is not open and 24-L*S*HH-244 *at TE, 24-LSHHH-244 at AN,* (scrubber sump level) is not active.
I-LOCK:	This valve will be inhibited from opening unless the following conditions are satisfied: • 24-L*S*HH-244 *at TE, 24-LSHHH-244 at AN,* (scrubber sump level) is not active
Device:	**24-XV-250A MPF PAS-SCRB-101 Liquor to pH Analyzer 24-AIT-247A Valve**
Advisor PC Tag:	X24XY250A
CONR:	C113
Driver Word:	1665
Driver Type:	4
Auto open:	This valve will automatically open if either clean liquor pump is running.
I-LOCK:	None.
Device:	***(AN ONLY) 24-XV-250B MPF PAS-SCRB-101 Process Water to pH Analyzer 24-AIT-247A Valve***
Advisor PC Tag:	*X24XY250B*
CONR:	*C113*
Driver Word:	*1666*
Driver Type:	*4*
Auto open:	*None. This valve will close if it is placed in manual.*
I-LOCK:	*This valve will be inhibited from opening unless the following condition is satisfied:* · *24-LSHHH-244 (scrubber sump level) is not active*

Table D.16. *ANCDF and* TOCDF MPF PAS PLC Automatic Control Sequences Advisor PC Screen: **MPS**

Device:	**24-XV-250C MPF PAS-SCRB-101 Liquor to pH Analyzer 24-AIT-247B Valve**
Advisor PC Tag:	X24XY250C
CONR:	C113
Driver Word:	1667
Driver Type:	4
Auto open:	This valve will automatically open if either clean liquor pump is running.
I-LOCK:	None.
Device:	***(AN ONLY) 24-XV-250D MPF PAS-SCRB-101 Process Water to pH Analyzer 24-AIT-247B Valve***
Advisor PC Tag:	*X24XY250D*
CONR:	*C113*
Driver Word:	*1668*
Driver Type:	*4*
Auto open:	*None. This valve will close if it is placed in manual.*
I-LOCK:	*This valve will be inhibited from opening unless the following condition is satisfied:* • *24-LSHHH-244 (scrubber sump level) is not active*

Table D.17. *ANCDF and* TOCDF MPF PAS PLC Automatic Control Sequences
Advisor PC Screen: **MPD**

Device:	**PAS-PUMP-137 MPF PAS Demister Water Return Pump**
Advisor PC Tag:	X24PP137
CONR:	C113
Driver Word:	0661
Driver Type:	2
Auto start:	The auto start relay for this pump is always active. The pump will run any time it is in automatic PLC control and the I-Lock is satisfied *(see FAWB Note B-17)*.
I-LOCK:	The following conditions must be satisfied to allow the pump to operate: • PAS-PUMP-137 deathwish relay (see A&I Matrix) is not active
Device:	**PAS-PUMP-137 MPF PAS Demister Water Return Pump Seal Water Valve**
Advisor PC Tag:	S24PP137
CONR:	C113
Driver Word:	0662
Driver Type:	2
Auto open:	The auto open relay for this valve is active whenever the pump start driver is active.
I-LOCK:	None. **Note:** This valve will open whenever the pump is running whether the valve is in auto or in manual.
Device:	**24-HS-293 MPF/Spare Demister Selection Switch**
Advisor PC Tag:	X24HS293
CONR:	C113
Driver Word:	0663
Driver Type:	4
Auto open:	None.
I-LOCK:	MPF cannot select the spare demister if the "DFS on Spare Demister" DICO from ICS-CONR-112 is active. **Note:** When this driver is active, ICS-CONR-113 uses the Spare Demister instrumentation for control and protective relays.

Table D.18. *ANCDF and* TOCDF MPF PAS PLC Automatic Control Sequences
Advisor PC Screen: **MPI**

Device:	**24-XV-282 MPF PAS-BLOW-102 Outlet Damper**
Advisor PC Tag:	X24XY282
CONR:	C113
Driver Word:	1260
Driver Type:	3
Auto open *(TE)*:	The auto open relay will be active if any of the following conditions is satisfied: • PAS-BLOW-102A is running • PAS-BLOW-102B is running • PAS-BLOW-106 is not running with its inlet and outlet dampers open
Auto open (AN):	*The auto open relay is always active.*
I-LOCK:	None.
Device:	**24-BLOW-102A MPF PAS-BLOW-102 1st Stage Motor**
Advisor PC Tag:	X24BW102A
CONR:	C113
Driver Word:	1261
Driver Type:	1
Auto start *(TE)*:	24-BLOW-102A will run in automatic if either of the following conditions is active: • 24-BLOW-102A is running (latch) • 24-BLOW-102B has been running for 60 seconds
Auto start (AN):	*24-BLOW-102A will run in automatic if either of the following conditions is active:* • *DICO from ICS-CONR-109 to start EDG critical loading is not active* • *DICO from ICS-CONR-109 to start EDG critical loading is active and PAS-BLOW-102A essential power auto start relay is active.*
I-LOCK:	The 1st stage motor will not run unless all of the following conditions are satisfied: • Deathwish to shut down both stages is not active (see A&I Matrix) • Deathwish to shut down 1st stage is not active (see A&I Matrix) • *(TE only)* Either lube oil pump (A/B) is running (on time delay) • *(TE only)* Total loss of utility power DICO from ICS-CONR-109 is not active
Device:	*(TE ONLY)* **24-BLOW-102 Lube Oil System**
Advisor PC Tag:	X24LO102
CONR:	C113
Driver Word:	1262
Driver Type:	1
Auto start:	The lube oil system auto start relay is always active.

Table D.18. *ANCDF and* TOCDF MPF PAS PLC Automatic Control Sequences Advisor PC Screen: **MPI**	
I-LOCK:	The lube oil system will not run unless the following condition is satisfied: • Deathwish to shut down the lube oil system is not active (see A&I Matrix)
Device:	**24-BLOW-102B MPF PAS-BLOW-102 2nd Stage Motor**
Advisor PC Tag:	X24BW102B
CONR:	C113
Driver Word:	1263
Driver Type:	1
Auto start *(TE)*:	The auto start relay for this blower is always active.
Auto start (AN):	*24-BLOW-102B will run in automatic if either of the following conditions is active:* • *DICO from ICS-CONR-109 to start EDG critical loading is not active* • *DICO from ICS-CONR-109 to start EDG critical loading is active and PAS-BLOW-102B essential power auto start relay is active.*
I-LOCK:	All of the following conditions must be satisfied for this blower to operate: • Deathwish to shut down both stages is not active (see A&I Matrix) • Deathwish to shut down 2nd stage is not active (see A&I Matrix) • *(TE only)* Either lube oil pump (A/B) running (on time delay) • *(TE only)* Total loss of utility power DICO from ICS-CONR-109 is not active
Device:	**24-PY-070A Air to Pressure Control Damper PCV-070 Isolation Valve**
Advisor PC Tag:	X14PY070A
CONR:	C113
Driver Word:	1264
Driver Type:	3
Auto open:	The auto open relay is always active.
I-LOCK:	None.

Table D.19. TOCDF MPF PAS PLC Automatic Control Sequences
Advisor PC Screen: **MPE**
(Screen MFE used by TOCDF only)

Device:	**24-BLOW-106 MPF PAS-BLOW-106 Emergency ID Fan**
Advisor PC Tag:	X24BW106
CONR:	C113
Driver Word:	0860
Driver Type:	1
Auto start:	The auto start relay will be active if either of the following conditions is satisfied: • ID fan had been on and essential equipment restart timer window is active • PAS-BLOW-102A and PAS-BLOW-102B both not running and MPF Afterburner temperature (14-TIC-065) > 1000 °F **Note**: Once the auto start relay is set, it remains latched until the blower is manually stopped or malfunctions.
I-LOCK:	None.
Device:	**24-XV-949 MPF PAS-BLOW-106 Inlet Damper**
Advisor PC Tag:	X24XY949
CONR:	C113
Driver Word:	0861
Driver Type:	3 (Fail open, driver active to close)
Auto close:	The auto close relay will be active if either of the following conditions is satisfied: • PAS-BLOW-106 not running • 24-PSH-953 (ID fan inlet pressure) not active
I-LOCK:	None.
Device:	**24-XV-950 MPF PAS-BLOW-106 Outlet Damper**
Advisor PC Tag:	X24XY950
CONR:	C113
Driver Word:	0862
Driver Type:	3 (Fail open, driver active to close)
Auto close:	The auto close relay will be active if either of the following conditions is satisfied: • PAS-BLOW-106 not running • 24-PSH-953 (ID fan inlet pressure) not active
I-LOCK:	None.

Table D.20. ANCDF and TOCDF DFS PAS PLC Automatic Control Sequences
Advisor PC Screen: ***RWS***

Device:	***PAS-PUMP-134 Recovered Water Feed Pump***
Advisor PC Tag:	*X24HS911*
CONR:	*C113*
Driver Word:	*4060*
Driver Type:	*1*
Auto start:	*PAS-PUMP-134 will run in automatic if either of the following conditions are active:* • *PAS-PUMP-134 selected as 'primary' and the 134/135 switchover shutdown 'primary' timer has not expired (see below)* • *PAS-PUMP-134 selected as 'secondary' and the 134/135 switchover relay is active (see below)*
I-LOCK:	*This pump will be inhibited from running unless the following condition is satisfied:* • *24-LSLL-922 PAS-TANK-103 level low-low is not active*
Relay:	*The relay to perform a primary/secondary switchover of pumps 134/135 will be active if any of the following conditions are satisfied:* • *Pump selected as 'primary' is running and 24-PSL-919 is active* • *Pump selected as 'primary' is in 'malfunction'* ***Note:*** *Once the 134/135 switchover relay is energized, it will remain active (latched) until both pumps are placed in manual.*
Timer:	*Shutdown Primary Pump After Switchover to Secondary. This will expire after 3 seconds. The timer will become active if the primary/secondary switchover relay is active (see above) and any of the following conditions are satisfied:* • *Pump selected as 'secondary' is running* • *Timer has been activated (latch)*
Device:	***PAS-PUMP-135 Recovered Water Feed Pump***
Advisor PC Tag:	*X24HS916*
CONR:	*C113*
Driver Word:	*4061*
Driver Type:	*1*
Auto start:	*PAS-PUMP-135 will run in automatic if either of the following conditions is active:* • *PAS-PUMP-135 selected as 'primary' and the 134/135 switchover shutdown 'primary' timer has not expired (see below)* • *PAS-PUMP-135 selected as 'secondary' and the 134/135 switchover relay is active (see below)*
I-LOCK:	*This pump will be inhibited from running unless the following condition is satisfied:* • *24-LSLL-922 PAS-TANK-103 level low-low is not active*

Table D.20. ANCDF and TOCDF DFS PAS PLC Automatic Control Sequences Advisor PC Screen: ***RWS***	
Relay:	*The relay to perform a primary/secondary switchover of pumps 134/135 will be active if any of the following conditions are satisfied:* • *Pump selected as 'primary' is running and 24-PSL-919 is active* • *Pump selected as 'primary' is in 'malfunction'* ***Note:*** *Once the 134/135 switchover relay is energized, it will remain active (latched) until both pumps are placed in manual.*
Timer:	*Shutdown Primary Pump After Switchover to Secondary. This will expire after 3 seconds. The timer will become active if the primary/secondary switchover relay is active (see above) and any of the following conditions are satisfied:* • *Pump selected as 'secondary' is running* • *Timer has been activated (latch)*

Table D.21. UMCDF Preliminary DFS PFS PLC Automatic Control Sequence, Advisor PC Screen: **DFF**

Device:	**PFS-FILT-111/112 Bypass Damper 114-XV-449**
Advisor PC Tag:	X114XV449
CONR:	C112
Driver Word:	3461
Driver Type:	9
Auto Open:	The damper will automatically OPEN if the following conditions are satisfied: • Operator selects 'BYPASS' icon on DFF screen AND initiates Start. OR • 114-TSHH-430 Reheater exhaust temperature alarm. (180°F)
Auto Close:	The damper will automatically CLOSE if the following conditions are satisfied: • Operator selects 'BYPASS' icon on DFF screen AND initiates Stop
Open I-Lock:	The device is interlocked from opening unless all the following are satisfied: • None. There are no I-Locks to inhibit the opening of the bypass damper.
Close I-Lock:	The device is interlocked from closing if the following conditions are met: • NOT 114-TSHH-430 Exhaust temperature from Reheater (180°F) AND • 114-XV-440/441/442/443 Dampers OPEN (FILT-111/112 used by DFS) OR • 114-XV-413/414/440/441/487/488 Dampers OPEN (FILT-111/113 used by DFS) OR • 114-XV-413/414/440/441/094/095/438/439 Dampers OPEN AND 114-XV-131/132 Dampers CLOSED (FILT-111/110 used by DFS) OR • 114-XV-413/414/442/443/487/488 Dampers OPEN (FILT-112/113 used by DFS) OR • 114-XV-413/414/442/443/094/095/438/439 Dampers OPEN AND 114-XV-131/132 Dampers CLOSED (FILT-112/110 used by DFS) OR • 114-XV-413/414/487/488/094/095/438/439 Dampers OPEN AND 114-XV-131/132 Dampers CLOSED (FILT-113/110 used by DFS) OR • 114-XV-413/414/440/441/415/416/436/437 Dampers OPEN AND 114-XV-410/409 Dampers CLOSED (FILT-111/209 used by DFS) OR • 114-XV-413/414/442/443/415/416/436/437 Dampers OPEN AND 114-XV-410/409 Dampers CLOSED (FILT-112/209 used by DFS) OR • 114-XV-413/414/487/488/415/416/436/437 Dampers OPEN AND 114-XV-410/409 Dampers CLOSED (FILT-113/209 used by DFS) OR • 114-XV-413/414/487/488/515/516/454/455 Dampers OPEN AND 114-XV-583/584 Dampers CLOSED (FILT-113/109 used by DFS) OR • 114-XV-413/414/442/443/515/516/454/455 Dampers OPEN AND 114-XV-583/584 Dampers CLOSED (FILT-112/109 used by DFS) OR • 114-XV-413/414/440/441/515/516/454/455 Dampers OPEN AND 114-XV-583/584 Dampers CLOSED (FILT-111/109 used by DFS)

Table D.21. UMCDF Preliminary DFS PFS PLC Automatic Control Sequence, Advisor PC Screen: **DFF**

Device:	**PFS-FILT-113 Spare Inlet Damper 114-XV-413**
Advisor PC Tag:	X114XV413
CONR:	C112
Driver Word:	3462
Driver Type:	9
Auto Open:	The damper will automatically open if the following conditions are satisfied: • Operator selects one of the following: PFS-FILT-113, PFS-FILT-110, PFS-FILT-109, PFS-FILT-209 icons on DFF screen AND initiates a START.
Auto Close	The damper will automatically close if the following conditions are satisfied: • Operator selects one of the following: PFS-FILT-113, PFS-FILT-110, PFS-FILT-109, PFS-FILT-209 icons on DFF screen AND initiates a STOP. OR • 114-TSHH-430 Reheater exhaust temperature alarm. (180°F)
Open I-LOCK:	The device is interlocked from opening unless all the following are satisfied: • Not 114-TSHH-430 Temperature (180°F) AND • 114-XV-094/095 or 114-XV-131/132 MPF Exhaust dampers Closed AND • 114-XV-515/516 or 114/XV-583/584 LIC1 Exhaust dampers Closed AND • 114-XV-415/416 or 114-XV-410/409 LIC2 Exhaust dampers Closed
Close I-LOCK:	The device is interlocked from closing unless one of the following are satisfied: • 114-XV-449 Bypass Valve OPEN OR • 114-XV-440/441/442/443 Dampers OPEN (FILT-111/112 used by DFS)
Device:	**PFS-FILT-113 Spare Outlet Damper 114-XV-414**
Advisor PC Tag:	X114XV414
CONR:	C112
Driver Word:	3463
Driver Type:	9
Auto Open:	The damper will automatically open if the following conditions are satisfied: • Operator selects one of the following: PFS-FILT-113, PFS-FILT-110, PFS-FILT-109, PFS-FILT-209 icons on DFF screen AND initiates a START.

Table D.21. UMCDF Preliminary DFS PFS PLC Automatic Control Sequence, Advisor PC Screen: **DFF**	
Auto Close:	The damper will automatically close if the following conditions are satisfied: • Operator selects one of the following: PFS-FILT-113, PFS-FILT-110, PFS-FILT-109, PFS-FILT-209 icons on DFF screen AND initiates a STOP. OR • 114-TSHH-430 Reheater exhaust temperature alarm. (180°F)
Open I-LOCK:	The device is interlocked from opening unless all the following are satisfied: • Not 114-TSHH-430 Temperature (180°F) AND • 114-XV-094/095 or 114-XV-131/132 MPF Exhaust dampers Closed AND • 114-XV-515/516 or 114/XV-583/584 LIC1 Exhaust dampers Closed AND • 114-XV-415/416 or 114-XV-410/409 LIC2 Exhaust dampers Closed
Close I-LOCK:	The device is interlocked from closing unless one of the following are satisfied: • 114-XV-449 Bypass Valve OPEN OR • 114-XV-440/441/442/443 Dampers OPEN (FILT-111/112 used by DFS)
Device:	**PFS-FILT-111 DFS PFS Filter Inlet Damper 114-XV-440**
Advisor PC Tag:	X114XV440
CONR:	C112
Driver Word:	3464
Driver Type:	9
Auto Open:	The damper will automatically open if the following conditions are satisfied: • Operator selects the PFS-FILT-111 icon on DFF screen AND initiates a START.
Auto Close:	The damper will automatically close if the following conditions are satisfied: • Operator selects the PFS-FILT-111 icon on DFF screen AND initiates a STOP. OR • 114-TSHH-430 Reheater exhaust temperature alarm. (180°F)
Open I-LOCK:	The device is interlocked from opening unless all the following are satisfied: • Not 114-TSHH-430 Temperature (180°F)
Close I-LOCK:	The device is interlocked from closing unless one of the following are satisfied: • 114-XV-449 PFS Filter Bypass OPEN OR • 114-XV-442/443/413/414/487/488 Dampers OPEN (FILT-112/113 used by DFS) OR • 114-XV-413/414/442/443/094/095/438/439 Dampers OPEN AND 114-XV-131/132 Dampers CLOSED (FILT-112/110 used by DFS) OR • 114-XV-413/414/442/443/515/516/454/455 Dampers OPEN AND 114-

Table D.21. UMCDF Preliminary DFS PFS PLC Automatic Control Sequence, Advisor PC Screen: **DFF**	
	XV-583/584 Dampers CLOSED (FILT-112/109 used by DFS) OR • 114-XV-413/414/442/443/415/416/436/437 Dampers OPEN AND 114-XV-410/409 Dampers CLOSED (FILT-112/209 used by DFS) OR • 114-XV-413/414/487/488/094/095/438/439 Dampers OPEN AND 114-XV-131/132 Dampers CLOSED (FILT-113/110 used by DFS) OR • 114-XV-413/414/487/488/515/516/454/455 Dampers OPEN AND 114-XV-583/584 Dampers CLOSED (FILT-113/109 used by DFS) OR • 114-XV-413/414/487/488/415/416/436/437 Dampers OPEN AND 114-XV-410/409 Dampers CLOSED (FILT-113/209 used by DFS)
Device:	**PFS-FILT-111 DFS PFS Filter Outlet Damper 114-XV-441**
Advisor PC Tag:	X114XV441
CONR:	C112
Driver Word:	3465
Driver Type:	9
Auto Open:	The damper will automatically open if the following conditions are satisfied: • Operator selects the PFS-FILT-111 icon on DFF screen AND initiates a START.
Auto Close:	The damper will automatically close if the following conditions are satisfied: • Operator selects the PFS-FILT-111 icon on DFF screen AND initiates a STOP OR • 114-TSHH-430 Reheater exhaust temperature alarm. (180°F)
Open I-LOCK:	The device is interlocked from opening unless all the following are satisfied: • Not 114-TSHH-430 Temperature (180°F)
Close I-LOCK:	The device is interlocked from closing unless one of the following are satisfied: • 114-XV-449 PFS Filter Bypass OPEN OR • 114-XV-413/414/442/443/487/488 Dampers OPEN (FILT-112/113 used by DFS) OR • 114-XV-413/414/442/443/094/095/438/439 Dampers OPEN AND 114-XV-131/132 Dampers CLOSED (FILT-112/110 used by DFS) OR • 114-XV-413/414/442/443/515/516/454/455 Dampers OPEN AND 114-XV-583/584 Dampers CLOSED (FILT-112/109 used by DFS) OR • 114-XV-413/414/442/443/415/416/436/437 Dampers OPEN AND 114-XV-410/409 Dampers CLOSED (FILT-112/209 used by DFS) OR • 114-XV-413/414/487/488/094/095/438/439 Dampers OPEN AND 114-XV-131/132 Dampers CLOSED (FILT-113/110 used by DFS) OR • 114-XV-413/414/487/488/515/516/454/455 Dampers OPEN AND 114-XV-583/584 Dampers CLOSED (FILT-113/109 used by DFS) OR • 114-XV-413/414/487/488/415/416/436/437 Dampers OPEN AND 114-XV-410/409 Dampers CLOSED (FILT-113/209 used by DFS)

Table D.21. UMCDF Preliminary DFS PFS PLC Automatic Control Sequence, Advisor PC Screen: **DFF**

Device:	**PFS-FILT-112 DFS PFS Filter Inlet Damper 114-XV-442**
Advisor PC Tag:	X114XV442
CONR:	C112
Driver Word:	3466
Driver Type:	9
Auto Open:	The damper will automatically open if the following conditions are satisfied: • Operator selects the PFS-FILT-112 icon on DFF screen AND initiates a START.
Auto Close:	The damper will automatically close if the following conditions are satisfied: • Operator selects the PFS-FILT-112 icon on DFF screen AND initiates a STOP OR • 114-TSHH-430 Reheater exhaust temperature alarm. (180°F)
Open I-LOCK:	The device is interlocked from opening unless all the following are satisfied: • Not 114-TSHH-430 Temperature (180°F)
Close I-LOCK:	The device is interlocked from closing unless one of the following are satisfied: • 114-XV-449 PFS Filter Bypass Damper OPEN OR • 114-XV-413/414/440/441/487/488 Dampers OPEN (FILT-111/113 used by DFS) OR • 114-XV-413/414/440/441/094/095/438/439 Dampers OPEN AND 114-XV-131/132 Dampers CLOSED (FILT-111/110 used by DFS) OR • 114-XV-413/414/440/441/515/516/454/455 Dampers OPEN AND 114-XV-583/584 Dampers CLOSED (FILT-111/109 used by DFS) OR • 114-XV-413/414/440/441/415/416/436/437 Dampers OPEN AND 114-XV-410/409 Dampers CLOSED (FILT-111/209 used by DFS) OR • 114-XV-413/414/487/488/094/095/438/439 Dampers OPEN AND 114-XV-131/132 Dampers CLOSED (FILT-113/110 used by DFS) OR • 114-XV-413/414/487/488/515/516/454/455 Dampers OPEN AND 114-XV-583/584 Dampers CLOSED (FILT-113/109 used by DFS) OR • 114-XV-413/414/487/488/415/416/436/437 Dampers OPEN AND 114-XV-410/409 Dampers CLOSED (FILT-113/209 used by DFS)
Device:	**PFS-FILT-112 DFS PFS Filter Outlet Damper 114-XV-443**
Advisor PC Tag:	X114XV443
CONR:	C112
Driver Word:	3467
Driver Type:	9
Auto Open:	The damper will automatically open if the following conditions are satisfied: • Operator selects the PFS-FILT-112 icon on DFF screen AND initiates a START.

Table D.21. UMCDF Preliminary DFS PFS PLC Automatic Control Sequence, Advisor PC Screen: **DFF**	
Auto Close:	The damper will automatically close if the following conditions are satisfied: • Operator selects the PFS-FILT-112 icon on DFF screen AND initiates a STOP. OR • 114-TSHH-430 Reheater exhaust temperature alarm. (180°F)
Open I-LOCK:	The device is interlocked from opening unless all the following are satisfied: • Not 114-TSHH-430 Temperature (180°F)
Close I-LOCK:	The device is interlocked from closing unless one of the following are satisfied: • 114-XV-449 PFS Filter Bypass Damper OPEN OR • 114-XV-413/414/440/441/487/488 Dampers OPEN (FILT-111/113 used by DFS) OR • 114-XV-413/414/440/441/094/095/438/439 Dampers OPEN AND 114-XV-131/132 Dampers CLOSED (FILT-111/110 used by DFS) OR • 114-XV-413/414/440/441/515/516/454/455 Dampers OPEN AND 114-XV-583/584 Dampers CLOSED (FILT-111/109 used by DFS) OR • 114-XV-413/414/440/441/415/416/436/437 Dampers OPEN AND 114-XV-410/409 Dampers CLOSED (FILT-111/209 used by DFS) OR • 114-XV-413/414/487/488/094/095/438/439 Dampers OPEN AND 114-XV-131/132 Dampers CLOSED (FILT-113/110 used by DFS) OR • 114-XV-413/414/487/488/515/516/454/455 Dampers OPEN AND 114-XV-583/584 Dampers CLOSED (FILT-113/109 used by DFS) OR • 114-XV-413/414/487/488/415/416/436/437 Dampers OPEN AND 114-XV-410/409 Dampers CLOSED (FILT-113/209 used by DFS)
Device:	**PFS-BURN-103 DFS PFS Reheater Burner 114-BURN-103**
Advisor PC Tag:	X114HS730
CONR:	C112
Driver Word:	3468
Driver Type:	4 (manual mode only)
Auto Start:	N/A
I-Lock:	The following conditions must be satisfied to allow the burner to operate: • At least one of the DFS ID Fans running. • 114-BSLL-716 DFS Reheater burner lockout not active *(Note: tag # for AN/PB is 114-XA-780)*.
Device:	**DFS Spare Filter Select (PFS-FILT-113) 114-HS-430C**
Advisor PC Tag:	DFF113
CONR:	C112
Driver Word:	3469
Driver Type:	9 (manual mode only)
Auto Start:	N/A
Auto Stop:	N/A

Table D.21. UMCDF Preliminary DFS PFS PLC Automatic Control Sequence, Advisor PC Screen: **DFF**	
Open I-LOCK:	The device is interlocked from opening unless all the following are satisfied: • Not 114-TSHH-430 Exhaust Temperature (180°F) AND • 114-XV-094/095 Damper CLOSED OR 114-XV-131/132 Dampers CLOSED AND • 114-XV-515/516 Damper CLOSED OR 114-XV-583/584 Dampers CLOSED AND • 114-XV-415/416 Damper CLOSED OR 114-XV-410/409 Dampers CLOSED
Close I-LOCK:	The device is interlocked from closing unless one of the following are satisfied: • 114-XV-449 PFS Filter Bypass Dampers OPEN OR • 114-XV-440/441/442/443 Dampers OPEN (FILT-111/112 used by DFS) OR • 114-XV-413/414/440/441/094/095/438/439 Dampers OPEN AND 114-XV-131/132 Dampers CLOSED (FILT-111/110 used by DFS) OR • 114-XV-413/414/440/441/515/516/454/455 Dampers OPEN AND 114-XV-583/584 Dampers CLOSED (FILT-111/109 used by DFS) OR • 114-XV-413/414/440/441/415/416/436/437 Dampers OPEN AND 114-XV-410/409 Dampers CLOSED (FILT-111/209 used by DFS) OR • 114-XV-413/414/442/443/094/095/438/439 Dampers OPEN AND 114-XV-131/132 Dampers CLOSED (FILT-112/110 used by DFS) OR • 114-XV-413/414/442/443/515/516/454/455 Dampers OPEN AND 114-XV-583/584 Dampers CLOSED (FILT-112/109 used by DFS) OR • 114-XV-413/414/442/443/415/416/436/437 Dampers OPEN AND 114-XV-410/409 Dampers CLOSED (FILT-112/209 used by DFS) OR • 114-XV-413/414/094/095/515/516/415/416 Dampers CLOSED (All systems shutoff from common duct)
Device:	**DFS Spare Filter Select (PFS-FILT-110) 114-HS-430D**
Advisor PC Tag:	DFF110
CONR:	C112
Driver Word:	3470
Driver Type:	9 (manual mode only)
Auto Start:	N/A
Auto Stop:	N/A
Open I-LOCK:	The device is interlocked from opening unless all the following are satisfied: • Not 114-TSHH-430 Exhaust Temperature (180°F) AND • 114-XV-094/095 Damper CLOSED OR 114-XV-131/132 Dampers CLOSED AND • 114-XV-515/516 Damper CLOSED OR 114-XV-583/584 Dampers CLOSED AND • 114-XV-415/416 Damper CLOSED OR 114-XV-410/409 Dampers CLOSED

Table D.21. UMCDF Preliminary DFS PFS PLC Automatic Control Sequence, Advisor PC Screen: **DFF**	
Close I-LOCK:	The device is interlocked from closing unless one of the following are satisfied: • 114-XV-449 PFS Filter Bypass OPEN OR • 114-XV-440/441/442/443 Dampers OPEN (FILT-111/112 used by DFS) OR • 114-XV-413/414/440/441/487/488 Dampers OPEN (FILT-111/113 used by DFS) OR • 114-XV-413/414/440/441/515/516/454/455 Dampers OPEN AND 114-XV-583/584 Dampers CLOSED (FILT-111/109 used by DFS) OR • 114-XV-413/414/440/441/415/416/436/437 Dampers OPEN AND 114-XV-410/409 Dampers CLOSED (FILT-111/209 used by DFS) OR • 114-XV-413/414/442/443/487/488 Dampers OPEN (FILT-112/113 used by DFS) OR • 114-XV-413/414/442/443/515/516/454/455 Dampers OPEN AND 114-XV-583/584 Dampers CLOSED (FILT-112/109 used by DFS) OR • 114-XV-413/414/442/443/415/416/436/437 Dampers OPEN AND 114-XV-410/409 Dampers CLOSED (FILT-112/209 used by DFS) OR • 114-XV-413/414/487/488/515/516/454/455 Dampers OPEN AND 114-XV-583/584 Dampers CLOSED (FILT-113/109 used by DFS) OR • 114-XV-413/414/487/488/415/416/436/437 Dampers OPEN AND 114-XV-410/409 Dampers CLOSED (FILT-113/209 used by DFS) OR • 114-XV-413/414/094/095/515/516/415/416 Dampers CLOSED (All systems shutoff from common duct)
Device:	**DFS Spare Filter Select (PFS-FILT-109) 114-HS-430E**
Advisor PC Tag:	DFF109
CONR:	C112
Driver Word:	3471
Driver Type:	9 (manual mode only)
Auto Start:	N/A
Auto Stop:	N/A
Open I-LOCK:	The device is interlocked from opening unless all the following are satisfied: • Not 114-TSHH-430 Exhaust Temperature (180°F) AND • 114-XV-094/095 Damper CLOSED OR 114-XV-131/132 Dampers CLOSED AND • 114-XV-515/516 Damper CLOSED OR 114-XV-583/584 Dampers CLOSED AND • 114-XV-415/416 Damper CLOSED OR 114-XV-410/409 Dampers CLOSED

Table D.21. UMCDF Preliminary DFS PFS PLC Automatic Control Sequence, Advisor PC Screen: **DFF**	
Close I-LOCK:	The device is interlocked from closing unless one of the following are satisfied: • 114-XV-449 PFS Filter Bypass OPEN OR • 114-XV-440/441/442/443 Dampers OPEN (FILT-111/112 used by DFS) OR • 114-XV-413/414/440/441/487/488 Dampers OPEN (FILT-111/113 used by DFS) OR • 114-XV-413/414/440/441/094/095/438/439 Dampers OPEN AND 114-XV-131/132 Dampers CLOSED (FILT-111/110 used by DFS) OR • 114-XV-413/414/440/441/415/416/436/437 Dampers OPEN AND 114-XV-410/409 Dampers CLOSED (FILT-111/209 used by DFS) OR • 114-XV-413/414/442/443/487/488 Dampers OPEN (FILT-112/113 used by DFS) OR • 114-XV-413/414/442/443/094/095/438/439 Dampers OPEN AND 114-XV-131/132 Dampers CLOSED (FILT-112/110 used by DFS) OR • 114-XV-413/414/442/443/415/416/436/437 Dampers OPEN AND 114-XV-410/409 Dampers CLOSED (FILT-112/209 used by DFS) OR • 114-XV-413/414/487/488/094/095/438/439 Dampers OPEN AND 114-XV-131/132 Dampers CLOSED (FILT-113/110 used by DFS) OR • 114-XV-413/414/487/488/415/416/436/437 Dampers OPEN AND 114-XV-410/409 Dampers CLOSED (FILT-113/209 used by DFS) OR • 114-XV-413/414/094/095/515/516/415/416 Dampers CLOSED (All systems shutoff from common duct)
Device:	**DFS Spare Filter Select (PFS-FILT-209) 114-HS-430F**
Advisor PC Tag:	DFF209
CONR:	C112
Driver Word:	3472
Driver Type:	9 (manual mode only)
Auto Start:	N/A
Auto Stop:	N/A
Open I-LOCK:	The device is interlocked from opening unless all the following are satisfied: • Not 114-TSHH-430 Exhaust Temperature (180°F) AND • 114-XV-094/095 Damper CLOSED OR 114-XV-131/132 Dampers CLOSED AND • 114-XV-515/516 Damper CLOSED OR 114-XV-583/584 Dampers CLOSED AND • 114-XV-415/416 Damper CLOSED OR 114-XV-410/409 Dampers CLOSED

Table D.21. UMCDF Preliminary DFS PFS PLC Automatic Control Sequence, Advisor PC Screen: **DFF**	
Close I-LOCK:	The device is interlocked from closing unless one of the following are satisfied: • 114-XV-449 PFS Filter Bypass OPEN OR • 114-XV-440/441/442/443 Dampers OPEN (FILT-111/112 used by DFS) OR • 114-XV-413/414/440/441/487/488 Dampers OPEN (FILT-111/113 used by DFS) OR • 114-XV-413/414/440/441/094/095/438/439 Dampers OPEN AND 114-XV-131/132 Dampers CLOSED (FILT-111/110 used by DFS) OR • 114-XV-413/414/440/441/515/516/454/455 Dampers OPEN AND 114-XV-583/584 Dampers CLOSED (FILT-111/109 used by DFS) OR • 114-XV-413/414/442/443/487/488 Dampers OPEN (FILT-112/113 used by DFS) OR • 114-XV-413/414/442/443/094/095/438/439 Dampers OPEN AND 114-XV-131/132 Dampers CLOSED (FILT-112/110 used by DFS) OR • 114-XV-413/414/442/443/515/516/454/455 Dampers OPEN AND 114-XV-583/584 Dampers CLOSED (FILT-112/109 used by DFS) OR • 114-XV-413/414/487/488/094/095/438/439 Dampers OPEN AND 114-XV-131/132 Dampers CLOSED (FILT-113/110 used by DFS) OR • 114-XV-413/414/487/488/515/516/454/455 Dampers OPEN AND 114-XV-583/584 Dampers CLOSED (FILT-113/109 used by DFS) OR • 114-XV-413/414/094/095/515/516/415/416 Dampers CLOSED (All systems shutoff from common duct)
Device:	**DFS Filter Select (PFS-FILT-111) 114-HS-430B1**
Advisor PC Tag:	DFF111
CONR:	C112
Driver Word:	3473
Driver Type:	9 (manual mode only)
Auto Start:	N/A
Auto Stop:	N/A
Open I-LOCK:	The device is interlocked from opening unless all the following are satisfied: • Not 114-TSHH-430 Exhaust Temperature (180°F)

Table D.21. UMCDF Preliminary DFS PFS PLC Automatic Control Sequence, Advisor PC Screen: **DFF**	
Close I-LOCK:	The device is interlocked from closing unless one of the following are satisfied: • 114-XV-449 PFS Filter Bypass OPEN OR • 114-XV-413/414/442/443/487/488 Dampers OPEN (FILT-112/113 used by DFS) OR • 114-XV-413/414/442/443/094/095/438/439 Dampers OPEN AND 114-XV-131/132 Dampers CLOSED (FILT-112/110 used by DFS) OR • 114-XV-413/414/442/443/515/516/454/455 Dampers OPEN AND 114-XV-583/584 Dampers CLOSED (FILT-112/109 used by DFS) OR • 114-XV-413/414/442/443/415/416/436/437 Dampers OPEN AND 114-XV-410/409 Dampers CLOSED (FILT-112/209 used by DFS) OR • 114-XV-413/414/487/488/094/095/438/439 Dampers OPEN AND 114-XV-131/132 Dampers CLOSED (FILT-113/110 used by DFS) OR • 114-XV-413/414/487/488/515/516/454/455 Dampers OPEN AND 114-XV-583/584 Dampers CLOSED (FILT-113/109 used by DFS) OR • 114-XV-413/414/487/488/415/416/436/437 Dampers OPEN AND 114-XV-410/409 Dampers CLOSED (FILT-113/209 used by DFS)
Device:	**DFS Filter Select (PFS-FILT-112) 114-HS-430B2**
Advisor PC Tag:	DFF112
CONR:	C112
Driver Word:	3474
Driver Type:	9 (manual mode only)
Auto Start:	N/A
Auto Stop:	N/A
Open I-LOCK:	The device is interlocked from opening unless all the following are satisfied: • Not 114-TSHH-430 Exhaust Temperature (180°F)
Close I-LOCK:	The device is interlocked from closing unless one of the following are satisfied: • 114-XV-449 PFS Filter Bypass OPEN OR • 114-XV-413/414/440/441/487/488 Dampers OPEN (FILT-111/113 used by DFS) OR • 114-XV-413/414/440/441/094/095/438/439 Dampers OPEN AND 114-XV-131/132 Dampers CLOSED (FILT-111/110 used by DFS) OR • 114-XV-413/414/440/441/515/516/454/455 Dampers OPEN AND 114-XV-583/584 Dampers CLOSED (FILT-111/109 used by DFS) OR • 114-XV-413/414/440/441/415/416/436/437 Dampers OPEN AND 114-XV-410/409 Dampers CLOSED (FILT-111/209 used by DFS) OR • 114-XV-413/414/487/488/094/095/438/439 Dampers OPEN AND 114-XV-131/132 Dampers CLOSED (FILT-113/110 used by DFS) OR • 114-XV-413/414/487/488/515/516/454/455 Dampers OPEN AND 114-XV-583/584 Dampers CLOSED (FILT-113/109 used by DFS) OR • 114-XV-413/414/487/488/415/416/436/437 Dampers OPEN AND 114-XV-410/409 Dampers CLOSED (FILT-113/209 used by DFS)

Table D.21. UMCDF Preliminary DFS PFS PLC Automatic Control Sequence, Advisor PC Screen: **DFF**

Device:	**DFS Filter Bypass 114-HS-430A**
Advisor PC Tag:	DFFBYPS
CONR:	C112
Driver Word:	3475
Driver Type:	9 (manual mode only)
Auto Start:	N/A
Auto Stop:	N/A
Open I-LOCK:	There are no Interlocks that inhibit the Bypass damper from being opened.
Close I-LOCK:	The device is interlocked from closing unless one of the following are satisfied: • 114-XV-440/441/442/443 Dampers OPEN (FILT-111/112 used by DFS) OR • 114-XV-413/414/440/441/487/488 Dampers OPEN (FILT-111/113 used by DFS) OR • 114-XV-413/414/440/441/094/095/438/439 Dampers OPEN AND 114-XV-131/132 Dampers CLOSED (FILT-111/110 used by DFS) OR • 114-XV-413/414/440/441/515/516/454/455 Dampers OPEN AND 114-XV-583/584 Dampers CLOSED (FILT-111/109 used by DFS) OR • 114-XV-413/414/440/441/415/416/436/437 Dampers OPEN AND 114-XV-410/409 Dampers CLOSED (FILT-111/209 used by DFS) OR • 114-XV-413/414/442/443/487/488 Dampers OPEN (FILT-112/113 used by DFS) OR • 114-XV-413/414/442/443/094/095/438/439 Dampers OPEN AND 114-XV-131/132 Dampers CLOSED (FILT-112/110 used by DFS) OR • 114-XV-413/414/442/443/515/516/454/455 Dampers OPEN AND 114-XV-583/584 Dampers CLOSED (FILT-112/109 used by DFS) OR • 114-XV-413/414/442/443/415/416/436/437 Dampers OPEN AND 114-XV-410/409 Dampers CLOSED (FILT-112/209 used by DFS) OR • 114-XV-413/414/487/488/094/095/438/439 Dampers OPEN AND 114-XV-131/132 Dampers CLOSED (FILT-113/110 used by DFS) OR • 114-XV-413/414/487/488/515/516/454/455 Dampers OPEN AND 114-XV-583/584 Dampers CLOSED (FILT-113/109 used by DFS) OR • 114-XV-413/414/487/488/415/416/436/437 Dampers OPEN AND 114-XV-410/409 Dampers CLOSED (FILT-113/209 used by DFS)

Table D.22. UMCDF Preliminary DFS PFS PLC Automatic Control Sequence, Advisor PC Screen: **DC1**

Device:	**PFS-COOL-115A CLEAN LIQUOR COOLER FAN A, 114-HS-621**
Advisor PC Tag:	X114HS621
CONR:	C112
Driver Word:	2860
Driver Type:	1
Auto Start:	The fan will automatically START if the following conditions are satisfied: • Operator puts device in 'AUTO' and all I-Locks are satisfied.
Auto Stop:	The fan will automatically STOP if the following conditions are satisfied: • Any of the I-Locks are not satisfied.
I-Lock:	The device is interlocked from starting unless all of the following are satisfied: • No LO Temp alarm (114-TIT-608). • No HI HI Vibration alarm (114-XSHH-612). • No HI Speed alarm (114-SI-614).
Device:	**PFS-COOL-115A CLEAN LIQUOR COOLER FAN B, 114-HS-620**
Advisor PC Tag:	X114HS620
CONR:	C112
Driver Word:	2861
Driver Type:	1
Auto Start:	The fan will automatically START if the following conditions are satisfied: • Operator puts device in 'AUTO' and all I-Locks are satisfied.
Auto Stop:	The fan will automatically STOP if the following conditions are satisfied: • Any of the I-Locks are not satisfied.
I-Lock:	The device is interlocked from starting unless all of the following are satisfied: • No LO Temp alarm (114-TIT-508). • No HI HI Vibration alarm (114-XSHH-610). • No HI Speed alarm (114-SI-613).
Device:	**PFS-COOL-115B CLEAN LIQUOR COOLER FAN A, 114-HS-596**
Advisor PC Tag:	X114HS596
CONR:	C112
Driver Word:	2862
Driver Type:	1
Auto Start:	The fan will automatically START if the following conditions are satisfied: • Operator puts device in 'AUTO' and all I-Locks are satisfied.
Auto Stop:	The fan will automatically STOP if the following conditions are satisfied: • Any of the I-Locks are not satisfied.
I-Lock:	The device is interlocked from starting unless all of the following are satisfied: • No LO Temp alarm (114-TIT-578). • No HI HI Vibration alarm (114-XSHH-592). • No HI Speed alarm (114-SI-594).

Table D.22. UMCDF Preliminary DFS PFS PLC Automatic Control Sequence, Advisor PC Screen: **DC1**

Device:	**PFS-COOL-115B CLEAN LIQUOR COOLER FAN B, 114-HS-595**
Advisor PC Tag:	X114HS595
CONR:	C112
Driver Word:	2863
Driver Type:	1
Auto Start:	The fan will automatically START if the following conditions are satisfied: • Operator puts device in 'AUTO' and all I-Locks are satisfied.
Auto Stop:	The fan will automatically STOP if the following conditions are satisfied: • Any of the I-Locks are not satisfied.
I-Lock:	The device is interlocked from starting unless all of the following are satisfied: • No LO Temp alarm (114-TIT-578). • No HI HI Vibration alarm (114-XSHH-580). • No HI Speed alarm (114-SI-593).

Table D.23. UMCDF Preliminary DFS PFS PLC Automatic Control Sequence, Advisor PC Screen: **DC2**

Device:	**PFS-COOL-115C CLEAN LIQUOR COOLER FAN A, 114-HS-568**
Advisor PC Tag:	X114HS568
CONR:	C112
Driver Word:	3060
Driver Type:	1
Auto Start:	The fan will automatically START if the following conditions are satisfied: • Operator puts device in 'AUTO' and all I-Locks are satisfied.
Auto Stop:	The fan will automatically STOP if the following conditions are satisfied: • Any of the I-Locks are not satisfied.
I-Lock:	The device is interlocked from starting unless all of the following are satisfied: • No LO Temp alarm (114-TIT-559). • No HI HI Vibration alarm (114-XSHH-564). • No HI Speed alarm (114-SI-566).
Device:	**PFS-COOL-115C CLEAN LIQUOR COOLER FAN B, 114-HS-567**
Advisor PC Tag:	X114HS567
CONR:	C112
Driver Word:	3061
Driver Type:	1
Auto Start:	The fan will automatically START if the following conditions are satisfied: • Operator puts device in 'AUTO' and all I-Locks are satisfied.
Auto Stop:	The fan will automatically STOP if the following conditions are satisfied: • Any of the I-Locks are not satisfied.
I-Lock:	The device is interlocked from starting unless all of the following are satisfied: • No LO Temp alarm (114-TIT-559). • No HI HI Vibration alarm (114-XSHH-561). • No HI Speed alarm (114-SI-565).
Device:	**PFS-COOL-115D CLEAN LIQUOR COOLER FAN A, 114-HS-163**
Advisor PC Tag:	X114HS163
CONR:	C112
Driver Word:	3062
Driver Type:	1
Auto Start:	The fan will automatically START if the following conditions are satisfied: • Operator puts device in 'AUTO' and all I-Locks are satisfied.
Auto Stop:	The fan will automatically STOP if the following conditions are satisfied: • Any of the I-Locks are not satisfied.
I-Lock:	The device is interlocked from starting unless all of the following are satisfied: • No LO Temp alarm (114-TIT-155). • No HI HI Vibration alarm (114-XSHH-159). • No HI Speed alarm (114-SI-161).

Table D.23. UMCDF Preliminary DFS PFS PLC Automatic Control Sequence, Advisor PC Screen: **DC2**

Device:	**PFS-COOL-115D CLEAN LIQUOR COOLER FAN B, 114-HS-162**
Advisor PC Tag:	X114HS162
CONR:	C112
Driver Word:	3063
Driver Type:	1
Auto Start:	The fan will automatically START if the following conditions are satisfied: • Operator puts device in 'AUTO' and all I-Locks are satisfied.
Auto Stop:	The fan will automatically STOP if the following conditions are satisfied: • Any of the I-Locks are not satisfied.
I-Lock:	The device is interlocked from starting unless all of the following are satisfied: • No LO Temp alarm (114-TIT-155). • No HI HI Vibration alarm (114-XSHH-157). • No HI Speed alarm (114-SI-160).

Table D.24. UMCDF Preliminary MPF PFS PLC Automatic Control Sequence, Advisor PC Screen: **MFF**

Device:	**PFS-FILT-110 Bypass Damper, 114-XV-093**
Advisor PC Tag:	X114XV093
CONR:	C113
Driver Word:	5061
Driver Type:	9
Auto Open:	The damper will automatically OPEN if the following conditions are satisfied: • Operator selects "BYPASS" icon on MFF screen AND initiates Start. OR • 114-TSHH-097 Reheater Exhaust temperature Alarm. (180°F)
Auto Close:	The damper will automatically CLOSE if the following conditions are satisfied: • Operator selects "BYPASS" icon on MFF screen AND initiates Stop.
Open I-Lock:	The device is interlocked from opening unless all the following are satisfied: • No I-Locks to inhibit the opening of the bypass damper.
Close I-Lock:	The device is interlocked from closing unless one of the following combinations are satisfied: • NOT 114-TSHH-097 Exhaust temperature of Reheater (180°F) AND • 114-XV-131/132/438/439 Dampers are OPEN (Path to FILT-110) OR • 114-XV-131/132/094/095/487/488 Dampers are OPEN (Path to FILT-113) OR • 114-XV-131/132/094/095/515/516/454/455 Dampers are OPEN AND 114-XV-583/584 Dampers are CLOSED (Path to FILT-109) OR • 114-XV-131/132/094/095/415/416/436/437 Dampers are OPEN AND 114-XV-410/409 Dampers are CLOSED (Path to FILT-209)
Device:	**PFS-FILT-113 Spare Inlet Damper, 114-XV-094**
Advisor PC Tag:	X114XV094
CONR:	C113
Driver Word:	5062
Driver Type:	9
Auto Open:	The damper will automatically OPEN if the following conditions are satisfied: • Operator selects "FILT-113" icon on MFF screen AND initiates Start OR • Operator selects "FILT-110" icon on DFF screens AND initiates Start.
Auto Close:	The damper will automatically CLOSE if the following conditions are satisfied: • Operator selects "FILT-113" icon on MFF screen AND initiates Stop. OR • Operator selects "FILT-110" icon on DFF screens AND initiates Stop. OR • 114-TSHH-097 Reheater Exhaust temperature Alarm. (180°F)

Table D.24. UMCDF Preliminary MPF PFS PLC Automatic Control Sequence, Advisor PC Screen: **MFF**	
Open I-LOCK:	The device is interlocked from opening unless all the following are satisfied: • 114-XV-131/132 Dampers CLOSED OR • 114-XV-131/132 Dampers OPEN AND • 114-XV-515/516 Dampers CLOSED or 114-XV-583/584 Dampers CLOSED AND • 114-XV-415/416 Dampers CLOSED or 114-XV-410/409 Dampers CLOSED AND • 114-XV-413/414 Dampers CLOSED
Close I-LOCK:	The device is interlocked from closing unless one of the following combinations are satisfied: • 114-XV-413/414 Dampers CLOSED (DFS isolated from common duct) OR • 114-XV-413/414/449 Dampers OPEN (DFS Bypass) OR • 114-XV-413/414/440/441/442/443 Dampers OPEN (FILT-111/112 used by DFS) OR • 114-XV-413/414/440/441/487/488 Dampers OPEN (FILT-111/113 used by DFS) OR • 114-XV-413/414/440/441/515/516/454/455 Dampers OPEN AND 114-XV-583/584 Dampers CLOSED (FILT-111/109 used by DFS) OR • 114-XV-413/414/440/441/415/416/436/437 Dampers OPEN AND 114-XV-410/409 Dampers CLOSED (FILT-111/209 used by DFS) OR • 114-XV-413/414/442/443/487/488 Dampers OPEN (FILT-112/113 used by DFS) OR • 114-XV-413/414/442/443/515/516/454/455 Dampers OPEN AND 114-XV-583/584 Dampers CLOSED (FILT-112/109 used by DFS) OR • 114-XV-413/414/442/443/415/416/436/437 Dampers OPEN AND 114-XV-410/409 Dampers CLOSED (FILT-112/209 used by DFS) OR • 114-XV-413/414/487/488/515/516/454/455 Dampers OPEN AND 114-XV-583/584 Dampers CLOSED (FILT-113/109 used by DFS) OR • 114-XV-413/414/487/488/415/416/436/437 Dampers OPEN AND 114-XV-410/409 Dampers CLOSED (FILT-113/209 used by DFS) AND • 114-XV-131/132/438/439 Dampers OPEN (FILT-110 used by MPF) OR • 114-XV-093 Damper OPEN (Bypass for MPF) AND • 114-XV-515/516 Dampers CLOSED (LIC#1 isolated from common duct) OR • 114-XV-583/584/515/516/487/488 Dampers OPEN (FILT-113 used by LIC#1) OR • 114-XV-583/584/515/516/454/455 Dampers OPEN AND 114-XV-583/584 Dampers CLOSED (FILT-109 used by LIC#1) OR • 114-XV-583/584/515/516/415/416/436/437 Dampers OPEN AND 114-XV-410/409 Dampers CLOSED (FILT-209 used by LIC#1) OR • 114-XV-515/516/550 Dampers OPEN (Bypass for LIC#1)

Table D.24. UMCDF Preliminary MPF PFS PLC Automatic Control Sequence, Advisor PC Screen: **MFF**	
	AND • 114-XV-415/416 Dampers CLOSED (LIC#2 isolated from common duct) OR • 114-XV-410/409/415/416/487/488 Dampers OPEN (FILT-113 used by LIC#2) OR • 114-XV-410/409/415/416/515/516/454/455 Dampers OPEN AND 114-XV-583/584 Dampers CLOSED (FILT-109 used by LIC#2) OR • 114-XV-410/409/415/416/436/437 Dampers OPEN (FILT-209 used by LIC#2) OR • 114-XV-415/416/450 Dampers OPEN (LIC#2 in bypass) OR • 114-XV-413/414/131/132/515/516/415/416 Dampers CLOSED (All systems shutoff from common duct)
Device:	**PFS-FILT-113 Spare Outlet Damper (114-XV-095)**
Advisor PC Tag:	X114XV095
CONR:	C113
Driver Word:	5063
Driver Type:	9
Auto Open:	The damper will automatically OPEN if the following conditions are satisfied: • Operator selects “FILT-113” icon on MFF screen AND initiates Start OR • Operator selects “FILT-110” icon on DFF screens AND initiates Start.
Auto Close:	The damper will automatically CLOSE if the following conditions are satisfied: • Operator selects “FILT-113” icon on MFF screen AND initiates Stop. OR • Operator selects “FILT-110” icon on DFF screens AND initiates Stop. OR • 114-TSHH-097 Reheater Exhaust temperature Alarm. (180°F)
Open I-LOCK:	The device is interlocked from opening unless all the following are satisfied: • 114-XV-131/132 Dampers CLOSED OR • 114-XV-131/132 Dampers OPEN AND • 114-XV-515/516 Dampers CLOSED or 114-XV-583/584 Dampers CLOSED AND • 114-XV-415/416 Dampers CLOSED or 114-XV-410/409 Dampers CLOSED AND • 114-XV-413/414 Dampers CLOSED
Close I-LOCK:	The device is interlocked from closing unless one of the following combinations are satisfied: • 114-XV-413/414 Dampers CLOSED (DFS isolated from common duct) OR • 114-XV-413/414/449 Dampers OPEN (DFS Bypass) OR • 114-XV-413/414/440/441/442/443 Dampers OPEN (FILT-111/112 used by DFS) OR • 114-XV-413/414/440/441/487/488 Dampers OPEN (FILT-111/113

Table D.24. UMCDF Preliminary MPF PFS PLC Automatic Control Sequence, Advisor PC Screen: **MFF**	
	used by DFS) OR • 114-XV-413/414/440/441/515/516/454/455 Dampers OPEN AND 114-XV-583/584 Dampers CLOSED (FILT-111/109 used by DFS) OR • 114-XV-413/414/440/441/415/416/436/437 Dampers OPEN AND 114-XV-410/409 Dampers CLOSED (FILT-111/209 used by DFS) OR • 114-XV-413/414/442/443/487/488 Dampers OPEN (FILT-112/113 used by DFS) OR • 114-XV-413/414/442/443/515/516/454/455 Dampers OPEN AND 114-XV-583/584 Dampers CLOSED (FILT-112/109 used by DFS) OR • 114-XV-413/414/442/443/415/416/436/437 Dampers OPEN AND 114-XV-410/409 Dampers CLOSED (FILT-112/209 used by DFS) OR • 114-XV-413/414/487/488/515/516/454/455 Dampers OPEN AND 114-XV-583/584 Dampers CLOSED (FILT-113/109 used by DFS) OR • 114-XV-413/414/487/488/415/416/436/437 Dampers OPEN AND 114-XV-410/409 Dampers CLOSED (FILT-113/209 used by DFS) AND • 114-XV-094/095 Dampers CLOSED (MPF isolated from Common duct) OR • 114-XV-131/132/438/439 Dampers OPEN (FILT-110 used by MPF) OR • 114-XV-093 Damper OPEN (Bypass for MPF) AND • 114-XV-515/516 Dampers CLOSED (LIC#1 isolated from common duct) OR • 114-XV-583/584/515/516/487/488 Dampers OPEN (FILT-113 used by LIC#1) OR • 114-XV-583/584/515/516/454/455 Dampers OPEN AND 114-XV-583/584 Dampers CLOSED (FILT-109 used by LIC#1) OR • 114-XV-583/584/515/516/415/416/436/437 Dampers OPEN AND 114-XV-410/409 Dampers CLOSED (FILT-209 used by LIC#1) OR • 114-XV-515/516/550 Dampers OPEN (Bypass for LIC#1) AND • 114-XV-415/416 Dampers CLOSED (LIC#2 isolated from common duct) OR • 114-XV-410/409/415/416/487/488 Dampers OPEN (FILT-113 used by LIC#2) OR • 114-XV-410/409/415/416/515/516/454/455 Dampers OPEN AND 114-XV-583/584 Dampers CLOSED (FILT-109 used by LIC#2) OR • 114-XV-410/409/415/416/436/437 Dampers OPEN (FILT-209 used by LIC#2) OR • 114-XV-415/416/450 Dampers OPEN (LIC#2 in bypass)
Device:	**PFS-FILT-110 MPF PFS Filter Inlet Damper, 114-XV-438**
Advisor PC Tag:	X114XV438
CONR:	C113
Driver Word:	5064
Driver Type:	9

Table D.24. UMCDF Preliminary MPF PFS PLC Automatic Control Sequence, Advisor PC Screen: **MFF**	
Auto Open:	The damper will automatically open if the following conditions are satisfied: • Operator selects “FILT-110” icon on MFF or DFF screen AND initiates Start.
Auto Close:	The damper will automatically close if the following conditions are satisfied: • Operator selects “FILT-110” icon on MFF or DFF screen AND initiates Stop.
Open I-LOCK:	The device is interlocked from opening unless all the following are satisfied: • Not 114-TSHH-097 MPF Reheater Exhaust (180°F)
Close I-LOCK:	The device is interlocked from closing unless one of the following are satisfied: • 114-XV-093 PFS Filter Bypass OPEN OR • 114-XV-131/132/094/095 Dampers CLOSED (MPF flow path isolated) OR • 114-XV-131/132/094/095/487/488 Damper OPEN (FILT-113 used by MPF) OR • 114-XV-131/132/094/095/515/516/454/455 Damper OPEN AND 114-XV-583/584 Dampers CLOSED (FILT-109 used by MPF) OR • 114-XV-131/132/094/095/415/416/436/437 Damper OPEN AND 114-XV-410/409 Dampers CLOSED (FILT-209 used by MPF)
Device:	**PFS-FILT-110 MPF PFS Filter Outlet Damper, 114-XV-439**
Advisor PC Tag:	X114XV439
CONR:	C113
Driver Word:	5065
Driver Type:	9
Auto Open:	The damper will automatically open if the following conditions are satisfied: • Operator selects “FILT-110” icon MFF or DFF screen AND initiates Start.
Auto Close	The damper will automatically close if the following conditions are satisfied: • Operator selects “FILT-110” icon MFF or DFF screen AND initiates Stop.
Open I-LOCK:	The device is interlocked from opening unless all the following are satisfied: • Not 114-TSHH-097 MPF Reheater Exhaust (180°F)

Table D.24. UMCDF Preliminary MPF PFS PLC Automatic Control Sequence, Advisor PC Screen: **MFF**	
Close I-LOCK:	The device is interlocked from closing unless all the following are satisfied: • 114-XV-093 PFS Filter Bypass OPEN OR • 114-XV-131/132/094/095 Dampers CLOSED (MPF flow path isolated) OR • 114-XV-131/132/094/095/487/488 Damper OPEN (FILT-113 used by MPF) OR • 114-XV-131/132/094/095/515/516/454/455 Damper OPEN AND 114-XV-583/584 Dampers CLOSED (FILT-109 used by MPF) OR • 114-XV-131/132/094/095/415/416/436/437 Damper OPEN AND 114-XV-410/409 Dampers CLOSED (FILT-209 used by MPF)
Device:	**PFS-FILT-113 Spare PFS Filter Inlet Damper, 114-XV-487**
Advisor PC Tag:	X114XV487
CONR:	C113
Driver Word:	5066
Driver Type:	9
Auto Open:	• Operator selects “FILT-113” icon from DFF, MFF, L1F or L2F Screen AND initiates Start.
Auto Close:	• Operator selects “FILT-113” icon from DFF, MFF, L1F or L2F Screen AND initiates Stop.
Open I-LOCK:	The device is interlocked from opening unless one the following are satisfied: • 114-XV-413/414 DFS to Spare Filter Dampers OPEN OR • 114-XV-094/095 MPF to Spare Filter Dampers OPEN OR • 114-XV-515/516 LIC1 to Spare Filter Dampers OPEN OR • 114-XV-415/416 LIC2 to Spare Filter Dampers OPEN
Close I-LOCK:	The device is interlocked from closing unless one of the following are satisfied: • 114-XV-413/414 Dampers CLOSED (DFS Isolation from Common Duct) OR • 114-XV-449/413/414 Dampers OPEN (DFS on Bypass) OR • 114-XV-440/441/442/443/413/414 Dampers OPEN (FILT-111/112 used by DFS) OR • 114-XV-440/441/413/414/094/095/438/439 Dampers OPEN AND 114-XV-131/132 Dampers CLOSED (FILT-111/110 used by DFS) OR • 114-XV-442/443/413/414/094/095/438/439 Dampers OPEN AND 114-XV-131/132 Dampers CLOSED (FILT-112/110 used by DFS) OR • 114-XV-440/441/413/414/515/516/454/455 Dampers OPEN AND 114-XV-583/584 Dampers CLOSED (FILT-111/109 used by DFS) OR • 114-XV-442/443/413/414/515/516/454/455 Dampers OPEN AND 114-XV-583/584 Dampers CLOSED (FILT-112/109 used by DFS) OR • 114-XV-440/441/413/414/415/416/436/437 Dampers OPEN AND 114-XV-410/409 Dampers CLOSED (FILT-111/209 used by DFS) OR • 114-XV-442/443/413/414/415/416/436/437 Dampers OPEN AND 114-XV-410/409 Dampers CLOSED (FILT-112/209 used by DFS) AND • 114-XV-094/095 Dampers CLOSED (MPF Isolation from Common

Table D.24. UMCDF Preliminary MPF PFS PLC Automatic Control Sequence, Advisor PC Screen: **MFF**	
	Duct) OR • 114-XV-094/095/131/132/093 Dampers OPEN (MPF on common duct AND in BYPASS) OR • 114-XV-094/095/131/132/438/439 Dampers OPEN (FILT-110 used by MPF) OR • 114-XV-094/095/131/132/515/516/454/455 Dampers OPEN AND 114-XV-583/584 Dampers CLOSED (FILT-109 used by MPF) OR • 114-XV-094/095/131/132/415/416/436/437 Dampers OPEN AND 114-XV-410/409 Dampers CLOSED (FILT-209 used by MPF) AND • 114-XV-515/516 Dampers CLOSED (LIC#1 Isolation from Common Duct) OR • 114-XV-515/516/583/584/550 Dampers OPEN (LIC#1 on common duct AND in BYPASS) OR • 114-XV-515/516/583/584/454/455 Dampers OPEN (FILT-109 used by LIC#1) OR • 114-XV-515/516/583/584/094/095/438/439 Dampers OPEN AND 114-XV-131/132 Dampers CLOSED (FILT-110 used by LIC#1) OR • 114-XV-515/516/583/584/415/416/436/437 Dampers OPEN AND 114-XV-410/409 Dampers CLOSED (FILT-209 used by LIC#1) • AND • 114-XV-415/416 Dampers CLOSED (LIC#2 Isolation from Common Duct) OR • 114-XV-415/416/410/409/450 Dampers OPEN (LIC#2 on common duct AND in BYPASS) OR • 114-XV-415/416/410/409/436/437 Dampers OPEN (FILT-209 used by LIC#2) OR • 114-XV-415/416/410/409/094/095/438/439 Dampers OPEN AND 114-XV-131/132 Dampers CLOSED (FILT-110 used by LIC#2) OR • 114-XV-415/416/410/409/515/516/454/455 Dampers OPEN AND 114-XV-583/584 Dampers CLOSED (FILT-109 used by LIC#2)
Device:	**PFS-FILT-113 Spare PFS Filter Outlet Damper, 114-XV-488**
Advisor PC Tag:	X114XV488
CONR:	C113
Driver Word:	5067
Driver Type:	9
Auto Open:	• Operator selects “FILT-113” icon from DFF, MFF, L1F or L2F Screen AND initiates Start.
Auto Close:	• Operator selects “FILT-113” icon from DFF, MFF, L1F or L2F Screen AND initiates Stop.
Open I-LOCK:	The device is interlocked from opening unless one the following are satisfied: • 114-XV-413/414 DFS to Spare Filter Dampers OPEN OR • 114-XV-094/095 MPF to Spare Filter Dampers OPEN OR • 114-XV-515/516 LIC1 to Spare Filter Dampers OPEN OR • 114-XV-415/416 LIC2 to Spare Filter Dampers OPEN

Table D.24. UMCDF Preliminary MPF PFS PLC Automatic Control Sequence, Advisor PC Screen: **MFF**	
Close I-LOCK:	The device is interlocked from closing unless one of the following are satisfied: • 114-XV-413/414 Dampers CLOSED (DFS Isolation from all systems) OR • 114-XV-449/413/414 Dampers OPEN (DFS on Bypass) OR • 114-XV-440/441/442/443/413/414 Dampers OPEN (FILT-111/112 used by DFS) OR • 114-XV-440/441/413/414/094/095/438/439 Dampers OPEN AND 114-XV-131/132 Dampers CLOSED (FILT-111/110 used by DFS) OR • 114-XV-442/443/413/414/094/095/438/439 Dampers OPEN AND 114-XV-131/132 Dampers CLOSED (FILT-112/110 used by DFS) OR • 114-XV-440/441/413/414/515/516/454/455 Dampers OPEN AND 114-XV-583/584 Dampers CLOSED (FILT-111/109 used by DFS) OR • 114-XV-442/443/413/414/515/516/454/455 Dampers OPEN AND 114-XV-583/584 Dampers CLOSED (FILT-112/109 used by DFS) OR • 114-XV-440/441/413/414/415/416/436/437 Dampers OPEN AND 114-XV-410/409 Dampers CLOSED (FILT-111/209 used by DFS) OR • 114-XV-442/443/413/414/415/416/436/437 Dampers OPEN AND 114-XV-410/409 Dampers CLOSED (FILT-112/209 used by DFS) AND • 114-XV-094/095 Dampers CLOSED (MPF Isolation from Common Duct) OR 114-XV-094/095/131/132/093 Dampers OPEN (MPF on common duct AND in BYPASS) OR • 114-XV-094/095/131/132/438/439 Dampers OPEN (FILT-110 used by MPF) OR • 114-XV-094/095/131/132/515/516/454/455 Dampers OPEN AND 114-XV-583/584 Dampers CLOSED (FILT-109 used by MPF) OR • 114-XV-094/095/131/132/415/416/436/437 Dampers OPEN AND 114-XV-410/409 Dampers CLOSED (FILT-209 used by MPF) AND • 114-XV-515/516 Dampers CLOSED (LIC#1 Isolation from Common Duct) OR • 114-XV-515/516/583/584/550 Dampers OPEN (LIC#1 on common duct AND in BYPASS) OR • 114-XV-515/516/583/584/454/455 Dampers OPEN (FILT-109 used by LIC#1) OR • 114-XV-515/516/583/584/094/095/438/439 Dampers OPEN AND 114-XV-131/132 Dampers CLOSED (FILT-110 used by LIC#1) OR • 114-XV-515/516/583/584/415/416/436/437 Dampers OPEN AND 114-XV-410/409 Dampers CLOSED (FILT-209 used by LIC#1) AND • 114-XV-415/416 Dampers CLOSED (LIC#2 Isolation from Common Duct) OR • 114-XV-415/416/410/409/450 Dampers OPEN (LIC#2 on common duct AND in BYPASS) OR • 114-XV-415/416/410/409/436/437 Dampers OPEN (FILT-209 used by LIC#2) OR

Table D.24. UMCDF Preliminary MPF PFS PLC Automatic Control Sequence, Advisor PC Screen: **MFF**	
	• 114-XV-415/416/410/409/094/095/438/439 Dampers OPEN AND 114-XV-131/132 Dampers CLOSED (FILT-110 used by LIC#2) OR • 114-XV-415/416/410/409/515/516/454/455 Dampers OPEN AND 114-XV-583/584 Dampers CLOSED (FILT-109 used by LIC#2)
Device:	**PFS-FILT-110 MPF PFS Carbon Filter Inlet Damper, 114-XV-131**
Advisor PC Tag:	X114XV131
CONR:	C113
Driver Word:	5068
Driver Type:	9
Auto Open:	The damper will automatically open if the following condition is satisfied: • Operator selects "FILT-110" or "FILT-113" icon from MFF Screen AND initiates Start.
Auto Close:	The damper will automatically close if the following condition is satisfied: • Operator selects "FILT-110" or "FILT-113" icon from MFF Screen AND initiates Stop.
Open I-LOCK:	The device is interlocked from opening unless all the following are satisfied: • Not 114-TSHH-097 Reheater Exhaust Temperature (180°F)
Close I-LOCK:	The device is interlocked from closing unless all the following are satisfied: • 114-XV-093 MPF PFS bypass damper OPEN
Device:	**PFS-FILT-110 MPF Carbon Filter Outlet Damper, 114-XV-132**
Advisor PC Tag:	X114XV132
CONR:	C113
Driver Word:	5069
Driver Type:	9
Auto Open:	The damper will automatically open if the following condition is satisfied: • Operator selects "FILT-110" or "FILT-113" icon from MFF Screen AND initiates Start.
Auto Close:	The damper will automatically close if the following condition is satisfied: • Operator selects "FILT-110" or "FILT-113" icon from MFF Screen AND initiates Stop.
Open I-LOCK:	The device is interlocked from opening unless all the following are satisfied: • Not 114-TSHH-097 Reheater Exhaust Temperature (180°F)
Close I-LOCK:	The device is interlocked from closing unless all the following are satisfied: • 114-XV-093 MPF PFS bypass damper OPEN
Device:	**PFS-BURN-102 MPF PFS Reheater Burner, 114-BURN-102**
Advisor PC Tag:	X114HS115
CONR:	C113
Driver Word:	5070
Driver Type:	4 (manual mode only)
Auto Start:	N/A

Table D.24. UMCDF Preliminary MPF PFS PLC Automatic Control Sequence, Advisor PC Screen: **MFF**	
I-Lock:	The following conditions must be satisfied to allow the burner to operate: • At least one of the MPF ID Fans running. AND • 114-BSLL-098 MPF Reheater burner lockout *(Note: tag # for AN/PB is 114-XA-127)*.
Device:	**MPF Spare Filter Select (PFS-FILT-113), 114-HS-097C**
Advisor PC Tag:	MFF113
CONR:	C113
Driver Word:	5071
Driver Type:	9 (manual mode only)
Auto Start:	N/A
Auto Stop:	N/A
Open I-LOCK:	The device is interlocked from opening unless all the following are satisfied: • Not 114-TSHH-097 Temperature (180°F) AND • 114-XV-413/414 Dampers CLOSED AND • 114-XV-515/516 Damper CLOSED OR 114-XV-583/584 Dampers CLOSED AND • 114-XV-415/416 Damper CLOSED OR 114-XV-410/409 Dampers CLOSED
Close I-LOCK:	The device is interlocked from closing unless one of the following are satisfied: • 114-XV-093 MPF Filter Bypass OPEN OR • 114-XV-131/132/438/439 Dampers OPEN (FILT-110 used by MPF) OR • 114-XV-131/132/094/.095/515/516/454/455 Dampers OPEN AND 114-XV-583/584 Dampers CLOSED (FILT-109 used by MPF) OR • 114-XV-131/132/094/.095/415/416/436/437 Dampers OPEN AND 114-XV-410/409 Dampers CLOSED (FILT-209 used by MPF)
Device:	**MPF Filter Select (PFS-FILT-110), 114-HS-097B**
Advisor PC Tag:	MFF110
CONR:	C113
Driver Word:	5072
Driver Type:	9 (manual mode only)
Auto Start:	N/A
Auto Stop:	N/A
Open I-LOCK:	The device is interlocked from opening unless all the following are satisfied: • Not 114-TSHH-097 Temperature (180°F)

Table D.24. UMCDF Preliminary MPF PFS PLC Automatic Control Sequence, Advisor PC Screen: **MFF**	
Close I-LOCK:	The device is interlocked from closing unless the one of the following are satisfied: • 114-XV-093 PFS Filter Bypass OPEN OR • 114-XV-131/132/094/095/487/488 Dampers OPEN (FILT-113 used by MPF) OR • 114-XV-131/132/094/.095/515/516/454/455 Dampers OPEN AND 114-XV-583/584 Dampers CLOSED (FILT-109 used by MPF) OR • 114-XV-131/132/094/.095/415/416/436/437 Dampers OPEN AND 114-XV-410/409 Dampers CLOSED (FILT-209 used by MPF)
Device:	**MPF Filter Bypass, 114-HS-097A**
Advisor PC Tag:	MFFBYPS
CONR:	C113
Driver Word:	5073
Driver Type:	9 (manual mode only)
Auto Start:	N/A
Auto Stop:	N/A
Open I-LOCK:	There are no Interlocks that inhibit the Bypass damper from being opened.
Close I-LOCK:	The device is interlocked from closing unless one of the following are satisfied: • 114-XV-131/132/438/439 Dampers OPEN (FILT-110 used by MPF) OR • 114-XV-131/132/094/095/487/488 Dampers OPEN (FILT-113 used by MPF) OR • 114-XV-131/132/094/095/515/516/454/455 Dampers OPEN AND 114-XV-583/584 Dampers CLOSED (FILT-109 used by MPF) OR • 114-XV-131/132/094/095/415/416/436/437 Dampers OPEN AND 114-XV-410/409 Dampers CLOSED (FILT-209 used by MPF)

Table D.25. UMCDF Preliminary MPF PFS PLC Automatic Control Sequence, Advisor PC Screen: **MFC**

Device:	**PFS-COOL-114A CLEAN LIQUOR COOLER FAN A, 114-HS-548**
Advisor PC Tag:	X114HS548
CONR:	C113
Driver Word:	860
Driver Type:	1
Auto Start:	The fan will automatically START if the following conditions are satisfied: • Operator puts device in 'AUTO' and all I-Locks are satisfied.
Auto Stop:	The fan will automatically STOP if the following conditions are satisfied: • Any of the I-Locks are not satisfied.
I-Lock:	The device is interlocked from starting unless all of the following are satisfied: • No LO Temp alarm (114-TIT-539). • No HI HI Vibration alarm (114-XSHH-544). • No HI Speed alarm (114-SI-546).
Device:	**PFS-COOL-114A CLEAN LIQUOR COOLER FAN B, 114-HS-547**
Advisor PC Tag:	X114HS547
CONR:	C113
Driver Word:	861
Driver Type:	1
Auto Start:	The fan will automatically START if the following conditions are satisfied: • Operator puts device in 'AUTO' and all I-Locks are satisfied.
Auto Stop:	The fan will automatically STOP if the following conditions are satisfied: • Any of the I-Locks are not satisfied.
I-Lock:	The device is interlocked from starting unless all of the following are satisfied: • No LO Temp alarm (114-TIT-539). • No HI HI Vibration alarm (114-XSHH-542). • No HI Speed alarm (114-SI-545).
Device:	**PFS-COOL-114B CLEAN LIQUOR COOLER FAN A, 114-HS-530**
Advisor PC Tag:	X114HS530
CONR:	C113
Driver Word:	862
Driver Type:	1
Auto Start:	The fan will automatically START if the following conditions are satisfied: • Operator puts device in 'AUTO' and all I-Locks are satisfied.
Auto Stop:	The fan will automatically STOP if the following conditions are satisfied: • Any of the I-Locks are not satisfied.
I-Lock:	The device is interlocked from starting unless all of the following are satisfied: • No LO Temp alarm (114-TIT-522). • No HI HI Vibration alarm (114-XSHH-526). • No HI Speed alarm (114-SI-528).

Table D.25. UMCDF Preliminary MPF PFS PLC Automatic Control Sequence, Advisor PC Screen: **MFC**

Device:	**PFS-COOL-114B CLEAN LIQUOR COOLER FAN B, 114-HS-529**
Advisor PC Tag:	X114HS529
CONR:	C113
Driver Word:	863
Driver Type:	1
Auto Start:	The fan will automatically START if the following conditions are satisfied: • Operator puts device in 'AUTO' and all I-Locks are satisfied.
Auto Stop:	The fan will automatically STOP if the following conditions are satisfied: • Any of the I-Locks are not satisfied.
I-Lock:	The device is interlocked from starting unless all of the following are satisfied: • No LO Temp alarm (114-TIT-522). • No HI HI Vibration alarm (114-XSHH-524). • No HI Speed alarm (114-SI-527).

Table D.26. UMCDF Preliminary LIC 1 [LIC 2] PFS PLC Automatic Control Sequence, Advisor PC Screen: **L1F [L2F]**

Device:	**PFS-FILT-109 [PFS-FILT-209] Bypass Damper 114-XV-550 [114-XV-450]**
Advisor PC Tag:	X114XV550 [X114XV450]
CONR:	C114 [C119]
Driver Word:	3261
Driver Type:	9
Auto Open:	The damper will automatically OPEN if the following conditions are satisfied: • Operator Selects “BYPASS” icon on L1F [L2F] screen and initiates START. OR • 114-TSHH-533 [114-TSHH-433] Exhaust temperature from reheater (180°F)
Auto Close:	The damper will automatically CLOSE if the following conditions are satisfied: • Operator Selects “BYPASS” icon on L1F [L2F] screen and initiates STOP.
Open I-Lock:	The device is interlocked from opening unless all the following are satisfied: • No I-Locks to inhibit the opening of the bypass damper.
Close I-Lock:	The device is interlocked from closing unless none of the following are satisfied: • NOT 114-TSHH-533 [114-TSHH-433] Exhaust temperature from Reheater (180°F) AND • 114-XV-583/584/454/455 [114-XV-410/409/436/437] Dampers OPEN (PFS-FILT-109 [PFS-FILT-209] used by LIC #1 [LIC #2]) OR • 114-XV-583/584/515/516/487/488 [114-XV-410/409/415/416/487/488]Dampers OPEN (PFS-FILT-113 used by LIC #1 [LIC #2]) OR • 114-XV-583/584/515/516/094/095/438/439 [114-XV-410/409/415/416/094/095/438/439] Dampers OPEN AND 114-XV-131/132 Dampers CLOSED (PFS-FILT-110 used by LIC #1 [LIC #2]) OR • 114-XV-583/584/515/516/415/416/436/437 [114-XV-410/409/415/416/515/516/454/455] Dampers OPEN AND 114-XV-410/409 [114-XV-583/584] Dampers CLOSED (PFS-FILT-209 [PFS-FILT-109] used by LIC #1 [LIC #2])
Device:	**PFS-FILT-113 Spare Inlet Damper 114-XV-515 [114-XV-415]**
Advisor PC Tag:	X114XV515 [X114XV415]
CONR:	C114 [C119]
Driver Word:	3262
Driver Type:	9

Table D.26. UMCDF Preliminary LIC 1 [LIC 2] PFS PLC Automatic Control Sequence, Advisor PC Screen: **L1F [L2F]**	
Auto Open:	The damper will automatically OPEN if the following conditions are satisfied: • Operator selects "FILT-113" icon on L1F [L2F] screen and initiates START. OR • Operator selects "FILT-109 [FILT-209]" icon on DFF screens and initiates START.
Auto Close:	The damper will automatically CLOSE if the following conditions are satisfied: • Operator selects "FILT-113" icon on L1F [L2F] screen and initiates STOP. OR • Operator selects "FILT-109 [FILT-209]" icon on DFF screens and initiates STOP. OR • 114-TSHH-533 [114-TSHH-433] Exhaust temperature from reheater (180°F)
Open I-LOCK:	114-XV-515 is interlocked from opening unless all the following are satisfied: • 114-XV-094/095 Dampers CLOSED or 114-XV-131/132 Dampers CLOSED (MPF Isolated) AND • 114-XV-415/416 Dampers CLOSED or 114-XV-410/409 Dampers CLOSED (LIC#2 isolated) AND • 114-XV-413/414 Dampers CLOSED or 114-XV-583/584 Dampers CLOSED (DFS isolated or LIC#1 isolated) 114-XV-415 is interlocked from opening unless all the following are satisfied: • 114-XV-410/409 Dampers CLOSED OR • 114-XV-410/409 Dampers OPEN AND • 114-XV-094/095 Dampers CLOSED or 114-XV-131/132 Dampers CLOSED AND • 114-XV-515/516 Dampers CLOSED or 114-XV-583/584 Dampers CLOSED AND 114-XV-413/414 Dampers CLOSED
Close I-LOCK:	The device is interlocked from closing unless one of the following is satisfied: • 114-XV-413/414 Dampers CLOSED (DFS isolated from common duct) OR • 114-XV-413/414/449 Dampers OPEN (DFS Bypass) OR • 114-XV-413/414/440/441/442/443 Dampers OPEN (FILT-111/112 used by DFS) OR • 114-XV-413/414/440/441/487/488 Dampers OPEN (FILT-111/113 used by DFS) OR • 114-XV-413/414/440/441/094/095/438/439 Dampers OPEN AND 114-XV-131/132 Dampers CLOSED (FILT-111/110 used by DFS) OR

Table D.26. UMCDF Preliminary LIC 1 [LIC 2] PFS PLC Automatic Control Sequence, Advisor PC Screen: **L1F [L2F]**
• 114-XV-413/414/440/441/415/416/436/437 [114-XV-413/414/440/441/515/516/454/455] Dampers OPEN AND 114-XV-410/409 [114-XV-583/584]Dampers CLOSED (FILT-111/209 [FILT-111/109] used by DFS) OR • 114-XV-413/414/442/443/487/488 Dampers OPEN (FILT-112/113 used by DFS) OR • 114-XV-413/414/442/443/094/095/438/439 Dampers OPEN AND 114-XV-131/132 Dampers CLOSED (FILT-112/110 used by DFS) OR • 114-XV-413/414/442/443/415/416/436/437 [114-XV-413/414/442/443/515/516/454/455]Dampers OPEN AND 114-XV-410/409 [114-XV-583/584]Dampers CLOSED (FILT-112/209 [FILT-112/109] used by DFS) OR • 114-XV-413/414/487/488/094/095/438/439 Dampers OPEN AND 114-XV-131/132 Dampers CLOSED (FILT-113/110 used by DFS) OR • 114-XV-413/414/487/488/415/416/436/437 [114-XV-413/414/487/488/515/516/454/455] Dampers OPEN AND 114-XV-410/409 [114-XV-583/584] Dampers CLOSED (FILT-113/209 [FILT-113/109] used by DFS) AND • 114-XV-094/095 Dampers CLOSED (MPF isolated from common duct) OR • 114-XV-131/132/094/095/438/439 Dampers OPEN (FILT-110 used by MPF) OR • 114-XV-094/095/093 Damper OPEN (Bypass for MPF) OR • 114-XV-583/584/094/095/487/488 Dampers OPEN (FILT-113 used by MPF) OR • 114-XV-583/584/094/095/415/416/436/437 [114-XV-583/584/094/095/515/516/454/455] Dampers OPEN AND 114-XV-410/409 [114-XV-583/584] Dampers CLOSED (FILT-209 [FILT-109] used by MPF) AND • 114-XV-415/416 [114-XV-515/516] Dampers CLOSED (LIC#2 [LIC#1] isolated from common duct) OR • 114-XV-410/409/415/416/487/488 [114-XV-583/584/515/516/487/488] Dampers OPEN (FILT-113 used by LIC#2 [LIC#1) OR • 114-XV-410/409/415/416/436/437 [114-XV-515/516/583/584/454/455] Dampers OPEN (FILT-209 [FILT-109] used by LIC#2 [LIC#1]) OR • 114-XV-415/416/450 [114-XV-550] Dampers OPEN (LIC#2 [LIC#1] in BYPASS) OR • 114-XV-410/409/415/416/094/095/438/439 [114-XV-583/584/515/516/094/095/438/439] Dampers OPEN AND 114-XV-131/132 Dampers CLOSED (FILT-110 used by LIC#2 [LIC#1]) AND • 114-XV-515/516 [114-XV-415/416] Dampers CLOSED (LIC#1 [LIC#2] isolated from common duct) OR

Table D.26. UMCDF Preliminary LIC 1 [LIC 2] PFS PLC Automatic Control Sequence, Advisor PC Screen: **L1F [L2F]**	
	• 114-XV-515/516/583/584/454/455 [114-XV-410/409/436/437] Dampers OPEN (FILT-109 [FILT-209] used by LIC#1 [LIC#2]) OR • 114-XV-550 [114-XV-450] Damper OPEN (LIC #1 [LIC#2] in Bypass)
Device:	**PFS-FILT-113 Spare Outlet Damper 114-XV-516 [14-XV-416]**
Advisor PC Tag:	X114XV516 [X114XV416]
CONR:	C114 [C119]
Driver Word:	3263
Driver Type:	9
Auto Open:	The damper will automatically OPEN if the following conditions are satisfied: • Operator selects “FILT-113” icon on L1F [L2F] screen and initiates START. OR • Operator selects “FILT-109 [FILT-209]” icon on DFF screens and initiates START.
Auto Close:	The damper will automatically CLOSE if the following conditions are satisfied: • Operator selects “FILT-113” icon on L1F [L2F] screen and initiates STOP. OR • Operator selects “FILT-109 [FILT-209]” icon on DFF screens and initiates STOP. OR • 114-TSHH-533 [114-TSHH-433] Exhaust temperature from Reheater (180°F)
Open I-LOCK for 114-XV-516 (LIC 1):	114-XV-516 is interlocked from opening unless the following are satisfied: • 114-XV-583/584 Dampers CLOSED OR • 114-XV-583/584 Dampers OPEN and • 114-XV-094/095 Dampers CLOSED or 114-XV-131/132 Dampers CLOSED and • 114-XV-415/416 Dampers CLOSED or 114-XV-410/409 Dampers CLOSED and • 114-XV-413/414 Dampers CLOSED
Open I-LOCK for 114-XV-416 (LIC 2):	114-XV-416 is interlocked from opening unless the following are satisfied: • 114-XV-410/409 Dampers CLOSED OR • 114-XV-410/409 Dampers OPEN and • 114-XV-094/095 Dampers CLOSED or 114-XV-131/132 Dampers CLOSED and • 114-XV-515/516 Dampers CLOSED or 114-XV-583/584 Dampers CLOSED and • 114-XV-413/414 Dampers CLOSED

Table D.26. UMCDF Preliminary LIC 1 [LIC 2] PFS PLC Automatic Control Sequence, Advisor PC Screen: **L1F [L2F]**	
Close I-LOCK:	The device is interlocked from closing unless one of the following is satisfied: • 114-XV-413/414 Dampers CLOSED (DFS isolated from common duct) OR • 114-XV-413/414/449 Dampers OPEN (DFS Bypass) OR • 114-XV-413/414/440/441/442/443 Dampers OPEN (FILT-111/112 used by DFS) OR • 114-XV-413/414/440/441/487/488 Dampers OPEN (FILT-111/113 used by DFS) OR • 114-XV-413/414/440/441/094/095/438/439 Dampers OPEN AND 114-XV-131/132 Dampers CLOSED (FILT-111/110 used by DFS) OR • 114-XV-413/414/440/441/415/416/436/437 [114-XV-413/414/440/441/515/516/454/455] Dampers OPEN AND 114-XV-410/409 [114-XV-583/584]Dampers CLOSED (FILT-111/209 [FILT-111/109] used by DFS) OR • 114-XV-413/414/442/443/487/488 Dampers OPEN (FILT-112/113 used by DFS) OR • 114-XV-413/414/442/443/094/095/438/439 Dampers OPEN AND 114-XV-131/132 Dampers CLOSED (FILT-112/110 used by DFS) OR • 114-XV-413/414/442/443/415/416/436/437 [114-XV-413/414/442/443/515/516/454/455]Dampers OPEN AND 114-XV-410/409 [114-XV-583/584]Dampers CLOSED (FILT-112/209 [FILT-112/109] used by DFS) OR • 114-XV-413/414/487/488/094/095/438/439 Dampers OPEN AND 114-XV-131/132 Dampers CLOSED (FILT-113/110 used by DFS) OR • 114-XV-413/414/487/488/415/416/436/437 [114-XV-413/414/487/488/515/516/454/455] Dampers OPEN AND 114-XV-410/409 [114-XV-583/584] Dampers CLOSED (FILT-113/209 [FILT-113/109] used by DFS) AND • 114-XV-094/095 Dampers CLOSED (MPF isolated from common duct) OR • 114-XV-131/132/094/095/438/439 Dampers OPEN (FILT-110 used by MPF) OR • 114-XV-094/095/093 Damper OPEN (Bypass for MPF) OR • 114-XV-583/584/094/095/487/488 Dampers OPEN (FILT-113 used by MPF) OR • 114-XV-583/584/094/095/415/416/436/437 [114-XV-583/584/094/095/515/516/454/455] Dampers OPEN AND 114-XV-410/409 [114-XV-583/584] Dampers CLOSED (FILT-209 [FILT-109] used by MPF) AND • 114-XV-415/416 [114-XV-515/516] Dampers CLOSED (LIC#2 [LIC#1] isolated from common duct) OR • 114-XV-410/409/415/416/487/488 [114-XV-583/584/515/516/487/488] Dampers OPEN (FILT-113 used by LIC#2 [LIC#1) OR

Table D.26. UMCDF Preliminary LIC 1 [LIC 2] PFS PLC Automatic Control Sequence, Advisor PC Screen: **L1F [L2F]**

	• 114-XV-410/409/415/416/436/437 [114-XV-515/516/583/584/454/455] Dampers OPEN (FILT-209 [FILT-109] used by LIC#2 [LIC#1]) OR • 114-XV-415/416/450 [114-XV-550] Dampers OPEN (LIC#2 [LIC#1] in BYPASS) OR • 114-XV-410/409/415/416/094/095/438/439 [114-XV-583/584/515/516/094/095/438/439] Dampers OPEN AND 114-XV-131/132 Dampers CLOSED (FILT-110 used by LIC#2 [LIC#1]) AND • 114-XV-515/516 [114-XV-415/416] Dampers CLOSED (LIC#1 [LIC#2] isolated from common duct) OR • 114-XV-515/516/583/584/454/455 [114-XV-410/409/436/437] Dampers OPEN (FILT-109 [FILT-209] used by LIC#1 [LIC#2]) OR • 114-XV-550 [114-XV-450] Damper OPEN (LIC #1 [LIC#2] in Bypass)
Device:	**PFS-FILT-109 [PFS-FILT-209] LIC 1 [LIC 2] PFS Filter Inlet Damper 114-XV-454 [114-XV-436]**
Advisor PC Tag:	X114XV454 [X114XV436]
CONR:	C114 [C119]
Driver Word:	3264
Driver Type:	9
Auto Open:	The damper will automatically open if the following conditions are satisfied: • Operator selects “FILT-109 [FILT-209]” icon on L1F [L2F] or DFF screen and initiates START.
Auto Close:	The damper will automatically close if the following conditions are satisfied: • Operator selects “FILT-109 [FILT-209]” icon on L1F [L2F] or DFF screen and initiates STOP.
Open I-LOCK:	The device is interlocked from opening unless all the following are satisfied: • 114-TSHH-533 [114-TSHH-433] LIC 1 [LIC 2] reheater exhaust temperature (180°F)
Close I-LOCK for 114-XV-454 (LIC1):	The device is interlocked from closing unless one of the following is satisfied: • 114-XV-413/414 Dampers CLOSED (DFS isolated from common duct) OR • 114-XV-413/414/449 Dampers OPEN (DFS Bypass) OR • 114-XV-413/414/440/441/442/443 Dampers OPEN (FILT-111/112 used by DFS) OR • 114-XV-413/414/440/441/487/488 Dampers OPEN (FILT-111/113 used by DFS) OR • 114-XV-413/414/440/441/094/095/438/439 Dampers OPEN AND 114-XV-131/132 Dampers CLOSED (FILT-111/110 used by DFS) OR • 114-XV-413/414/440/441/415/416/436/437 Dampers OPEN AND 114-XV-410/409 Dampers CLOSED (FILT-111/209 used by DFS) OR

Table D.26. UMCDF Preliminary LIC 1 [LIC 2] PFS PLC Automatic Control Sequence, Advisor PC Screen: **L1F [L2F]**	
	• 114-XV-413/414/442/443/487/488 Dampers OPEN (FILT-112/113 used by DFS) OR • 114-XV-413/414/442/443//094/095/438/439 Dampers OPEN AND 114-XV-131/132 Dampers CLOSED (FILT-112/110 used by DFS) OR • 114-XV-413/414/442/443/415/416/436/437 Dampers OPEN AND 114-XV-410/409 Dampers CLOSED (FILT-112/209 used by DFS) OR • 114-XV-413/414/487/488//094/095/438/439 Dampers OPEN AND 114-XV-131/132 Dampers CLOSED (FILT-113/110 used by DFS) OR • 114-XV-413/414/487/488/415/416/436/437 Dampers OPEN AND 114-XV-410/409 Dampers CLOSED (FILT-113/209 used by DFS) AND • 114-XV-094/095 Dampers CLOSED (MPF isolated from common duct) OR • 114-XV-131/132/438/439 Dampers OPEN (FILT-110 used by MPF) OR • 114-XV-094/095/093 Damper OPEN (Bypass for MPF) OR • 114-XV-583/584/515/516/487/488 Dampers OPEN (FILT-113 used by MPF) OR • 114-XV-583/584/515/516/415/416/436/437 Dampers OPEN AND 114-XV-410/409 Dampers CLOSED (FILT-209 used by MPF) AND • 114-XV-515/516 Dampers CLOSED (LIC#1 isolated from common duct) OR • 114-XV-550 Dampers OPEN (Bypass for LIC#1) AND • 114-XV-415/416 Dampers CLOSED (LIC#2 isolated from common duct) OR • 114-XV-410/409/415/416/487/488 Dampers OPEN (FILT-113 used by LIC#2) OR • 114-XV-410/409/415/416/094/095/438/439 Dampers OPEN AND 114-XV-131/132 Dampers CLOSED (FILT-110 used by LIC#2) OR • 114-XV-410/409/415/416/436/437 Dampers OPEN (FILT-209 used by LIC#2) • 114-XV-415/416/450 Dampers OPEN (LIC#2 in bypass)
Close I-LOCK for 114-XV-436 (LIC2):	The device is interlocked from closing unless one of the following is satisfied: • 114-XV-413/414 Dampers CLOSED (DFS isolated from common duct) OR • 114-XV-413/414/449 Dampers OPEN (DFS Bypass) OR • 114-XV-413/414/440/441/442/443 Dampers OPEN (FILT-111/112 used by DFS) OR • 114-XV-413/414/440/441/487/488 Dampers OPEN (FILT-111/113 used by DFS) OR • 114-XV-413/414/440/441/094/095/438/439 Dampers OPEN AND 114-XV-131/132 Dampers CLOSED (FILT-111/110 used by DFS) OR • 114-XV-413/414/440/441/515/516/454/455 Dampers OPEN AND 114-

Table D.26. UMCDF Preliminary LIC 1 [LIC 2] PFS PLC Automatic Control Sequence, Advisor PC Screen: **L1F [L2F]**

XV-583/584 Dampers CLOSED (FILT-111/109 used by DFS) OR

- 114-XV-413/414/442/443/487/488 Dampers OPEN (FILT-112/113 used by DFS) OR
- 114-XV-413/414/442/443//094/095/438/439 Dampers OPEN AND 114-XV-131/132 Dampers CLOSED (FILT-112/110 used by DFS) OR
- 114-XV-413/414/442/443/515/516/454/455 Dampers OPEN AND 114-XV-583/584 Dampers CLOSED (FILT-112/109 used by DFS) OR
- 114-XV-413/414/487/488//094/095/438/439 Dampers OPEN AND 114-XV-131/132 Dampers CLOSED (FILT-113/110 used by DFS) OR
- 114-XV-413/414/487/488/515/516/454/455 Dampers OPEN AND 114-XV-583/584 Dampers CLOSED (FILT-113/109 used by DFS)

AND

- 114-XV-094/095 Dampers CLOSED (MPF isolated from common duct) OR
- 114-XV-131/132/438/439 Dampers OPEN (FILT-110 used by MPF) OR
- 114-XV-094/095/093 Damper OPEN (Bypass for MPF) OR
- 114-XV-583/584/515/516/487/488 Dampers OPEN (FILT-113 used by MPF) OR
- 114-XV-583/584/515/516/515/516/454/455 Dampers OPEN AND 114-XV-583/584 Dampers CLOSED (FILT-109 used by MPF)

AND

- 114-XV-515/516 Dampers CLOSED (LIC#1 isolated from common duct) OR
- 114-XV-515/516/550 Dampers OPEN (Bypass for LIC#1)
- 114-XV-583/584/515/516/487/488 Dampers OPEN (FILT-113 used by LIC#1) OR
- 114-XV-583/584/515/516/094/095/438/439 Dampers OPEN AND 114-XV-131/132 Dampers CLOSED (FILT-110 used by LIC#1) OR
- 114-XV-583/584/515/516/454/455 Dampers OPEN (FILT-109 used by LIC#1)

AND

- 114-XV-415/416 Dampers CLOSED (LIC#2 isolated from common duct) OR
- 114-XV-410/409/415/416/487/488 Dampers OPEN (FILT-113 used by LIC#2) OR
- 114-XV-410/409/415/416/094/095/438/439 Dampers OPEN AND 114-XV-131/132 Dampers CLOSED (FILT-110 used by LIC#2) OR
- 114-XV-410/409/515/516/454/455 Dampers OPEN AND 114-XV-583/584 Dampers CLOSED (FILT-109 used by LIC#2) OR 114-XV-415/416/450 Dampers OPEN (LIC#2 in bypass)

Device:	**PFS-FILT-109 [PFS-FILT-209] LIC 1 [LIC 2] PFS Filter Outlet Damper 114-XV-455 [114-XV-437]**
Advisor PC Tag:	X114XV455 [X114XV437]
CONR:	C114 [C119]
Driver Word:	3265

Table D.26. UMCDF Preliminary LIC 1 [LIC 2] PFS PLC Automatic Control Sequence, Advisor PC Screen: **L1F [L2F]**	
Driver Type:	9
Auto Open:	The damper will automatically open if the following conditions are satisfied: • Operator selects "FILT-109 [FILT-209]" icon on L1F [L2F] and DFF screen and initiates START.
Auto Close:	The damper will automatically close if the following conditions are satisfied: • Operator selects "FILT-109 [FILT-209]" icon on L1F [L2F] and DFF screen and initiates STOP.
Open I-LOCK:	The device is interlocked from opening unless all the following are satisfied: • 114-TSHH-533 [114-TSHH-433] LIC 1 [LIC 2] reheater exhaust temperature (180°F)
Close I-LOCK for 114-XV-455 (LIC1):	The device is interlocked from closing unless one of the following is satisfied: • 114-XV-413/414 Dampers CLOSED (DFS isolated from common duct) OR • 114-XV-413/414/449 Dampers OPEN (DFS Bypass) OR • 114-XV-413/414/440/441/442/443 Dampers OPEN (FILT-111/112 used by DFS) OR • 114-XV-413/414/440/441/487/488 Dampers OPEN (FILT-111/113 used by DFS) OR • 114-XV-413/414/440/441/094/095/438/439 Dampers OPEN AND 114-XV-131/132 Dampers CLOSED (FILT-111/110 used by DFS) OR • 114-XV-413/414/440/441/415/416/436/437 Dampers OPEN AND 114-XV-410/409 Dampers CLOSED (FILT-111/209 used by DFS) OR • 114-XV-413/414/442/443/487/488 Dampers OPEN (FILT-112/113 used by DFS) OR • 114-XV-413/414/442/443//094/095/438/439 Dampers OPEN AND 114-XV-131/132 Dampers CLOSED (FILT-112/110 used by DFS) OR • 114-XV-413/414/442/443/415/416/436/437 Dampers OPEN AND 114-XV-410/409 Dampers CLOSED (FILT-112/209 used by DFS) OR • 114-XV-413/414/487/488//094/095/438/439 Dampers OPEN AND 114-XV-131/132 Dampers CLOSED (FILT-113/110 used by DFS) OR • 114-XV-413/414/487/488/415/416/436/437 Dampers OPEN AND 114-XV-410/409 Dampers CLOSED (FILT-113/209 used by DFS) AND • 114-XV-094/095 Dampers CLOSED (MPF isolated from common duct) OR • 114-XV-131/132/438/439 Dampers OPEN (FILT-110 used by MPF) OR • 114-XV-094/095/093 Damper OPEN (Bypass for MPF) OR • 114-XV-583/584/515/516/487/488 Dampers OPEN (FILT-113 used by MPF) OR • 114-XV-583/584/515/516/415/416/436/437 Dampers OPEN AND 114-XV-410/409 Dampers CLOSED (FILT-209 used by MPF) AND

Table D.26. UMCDF Preliminary LIC 1 [LIC 2] PFS PLC Automatic Control Sequence, Advisor PC Screen: **L1F [L2F]**	
	• 114-XV-515/516 Dampers CLOSED (LIC#1 isolated from common duct) OR • 114-XV-550 Dampers OPEN (Bypass for LIC#1) AND • 114-XV-415/416 Dampers CLOSED (LIC#2 isolated from common duct) OR • 114-XV-410/409/415/416/487/488 Dampers OPEN (FILT-113 used by LIC#2) OR • 114-XV-410/409/415/416/094/095/438/439 Dampers OPEN AND 114-XV-131/132 Dampers CLOSED (FILT-110 used by LIC#2) OR • 114-XV-410/409/415/416/436/437 Dampers OPEN (FILT-209 used by LIC#2) OR • 114-XV-415/416/450 Dampers OPEN (LIC#2 in bypass)
Close I-LOCK for 114-XV-455 (LIC2):	The device is interlocked from closing unless one of the following is satisfied: • 114-XV-413/414 Dampers CLOSED (DFS isolated from common duct) OR • 114-XV-413/414/449 Dampers OPEN (DFS Bypass) OR • 114-XV-413/414/440/441/442/443 Dampers OPEN (FILT-111/112 used by DFS) OR • 114-XV-413/414/440/441/487/488 Dampers OPEN (FILT-111/113 used by DFS) OR • 114-XV-413/414/440/441/094/095/438/439 Dampers OPEN AND 114-XV-131/132 Dampers CLOSED (FILT-111/110 used by DFS) OR • 114-XV-413/414/440/441/515/516/454/455 Dampers OPEN AND 114-XV-583/584 Dampers CLOSED (FILT-111/109 used by DFS) OR • 114-XV-413/414/442/443/487/488 Dampers OPEN (FILT-112/113 used by DFS) OR • 114-XV-413/414/442/443//094/095/438/439 Dampers OPEN AND 114-XV-131/132 Dampers CLOSED (FILT-112/110 used by DFS) OR • 114-XV-413/414/442/443/515/516/454/455 Dampers OPEN AND 114-XV-583/584 Dampers CLOSED (FILT-112/109 used by DFS) OR • 114-XV-413/414/487/488//094/095/438/439 Dampers OPEN AND 114-XV-131/132 Dampers CLOSED (FILT-113/110 used by DFS) OR • 114-XV-413/414/487/488/515/516/454/455 Dampers OPEN AND 114-XV-583/584 Dampers CLOSED (FILT-113/109 used by DFS) AND • 114-XV-094/095 Dampers CLOSED (MPF isolated from common duct) OR • 114-XV-131/132/438/439 Dampers OPEN (FILT-110 used by MPF) OR • 114-XV-094/095/093 Damper OPEN (Bypass for MPF) OR • 114-XV-583/584/515/516/487/488 Dampers OPEN (FILT-113 used by MPF) OR • 114-XV-583/584/515/516/515/516/454/455 Dampers OPEN AND 114-XV-583/584 Dampers CLOSED (FILT-109 used by MPF)

Table D.26. UMCDF Preliminary LIC 1 [LIC 2] PFS PLC Automatic Control Sequence, Advisor PC Screen: **L1F [L2F]**	
	AND • 114-XV-515/516 Dampers CLOSED (LIC#1 isolated from common duct) OR • 114-XV-515/516/550 Dampers OPEN (Bypass for LIC#1) • 114-XV-583/584/515/516/487/488 Dampers OPEN (FILT-113 used by LIC#1) OR • 114-XV-583/584/515/516/094/095/438/439 Dampers OPEN AND 114-XV-131/132 Dampers CLOSED (FILT-110 used by LIC#1) OR • 114-XV-583/584/515/516/454/455 Dampers OPEN (FILT-109 used by LIC#1) AND • 114-XV-415/416 Dampers CLOSED (LIC#2 isolated from common duct) OR • 114-XV-410/409/415/416/487/488 Dampers OPEN (FILT-113 used by LIC#2) OR • 114-XV-410/409/415/416/094/095/438/439 Dampers OPEN AND 114-XV-131/132 Dampers CLOSED (FILT-110 used by LIC#2) OR • 114-XV-410/409/515/516/454/455 Dampers OPEN AND 114-XV-583/584 Dampers CLOSED (FILT-109 used by LIC#2) OR 114-XV-415/416/450 Dampers OPEN (LIC#2 in bypass)
Device:	**PFS-FILT-109 [PFS-FILT-209] LIC 1 [LIC 2] PFS Carbon Filter Inlet Damper 114-XV-583 [114-XV-410]**
Advisor PC Tag:	X114XV583 [X114XV410]
CONR:	C114 [C119]
Driver Word:	3266
Driver Type:	9
Auto Open:	The damper will automatically open if the following condition is satisfied: • Operator selects “FILT-113” or “FILT-109 [FILT-209]” icon from L1F [L2F] Screen and initiates START.
Auto Close:	The damper will automatically close if the following condition is satisfied: • Operator selects “FILT-113” or “FILT-109 [FILT-209]” icon from L1F [L2F] Screen and initiates STOP.
Open I-LOCK:	The device is interlocked from opening if any of the following are satisfied: • 114-TSHH-533 [114-TSHH-433] LIC 1 [LIC 2] Reheater Exhaust Temperature (180°F)
Close I-LOCK:	The device is interlocked from closing unless all the following are satisfied: • 114-XV-550 [114-XV-450] PFS-FILT-109 [PFS-FILT-209] bypass damper OPEN
Device:	**PFS-FILT-109 [PFS-FILT-209] LIC 1 [LIC 2] Carbon Filter Outlet Damper 114-XV-584 [114-XV-409]**
Advisor PC Tag:	X114XV584 [X114XV409]
CONR:	C114 [C119]
Driver Word:	3267
Driver Type:	9

Table D.26. UMCDF Preliminary LIC 1 [LIC 2] PFS PLC Automatic Control Sequence, Advisor PC Screen: **L1F [L2F]**	
Auto Open:	The damper will automatically open if the following condition is satisfied: • Operator selects "FILT-113" or "FILT-109 [FILT-209]" icon from L1F [L2F] Screen and initiates START.
Auto Close:	The damper will automatically close if the following condition is satisfied: • Operator selects "FILT-113" or "FILT-109 [FILT-209]" icon from L1F [L2F] Screen and initiates STOP.
Open I-LOCK:	The device is interlocked from opening if any of the following are satisfied: • 114-TSHH-533 [114-TSHH-433] LIC 1 [LIC 2] Reheater Exhaust Temperature (180°F)
Close I-LOCK:	The device is interlocked from closing unless all the following are satisfied: • 114-XV-550 [114-XV-450] PFS-FILT-109 [PFS-FILT-209] bypass damper OPEN
Device:	**PFS-BURN-101 [PFS-BURN-201] LIC 1 [LIC 2] PFS Reheater Burner 114-BURN-101 [114-BURN-201]**
Advisor PC Tag:	X114HS471 [X114HS761]
CONR:	C114 [C119]
Driver Word:	3268
Driver Type:	4 (manual mode only)
Auto Start:	N/A
I-Lock:	The following conditions must be satisfied to allow the burner to operate: • At least one of the LIC 1 [LIC 2] ID Fans running. • 114-BSLL-457 [114-BSLL-747] LIC 1 [LIC 2] reheater burner lockout *(Note: PB tag # is 114-XA-483 and AN tag # is 114-XA-783)*.
Device:	**LIC 1 [LIC 2] Spare Filter Select (PFS-FILT-113) 114-HS-533C [114-HS-433C]**
Advisor PC Tag:	L1F113 [L2F113]
CONR:	C114 [C119]
Driver Word:	3269
Driver Type:	9 (manual mode only)
Auto Start:	N/A
Auto Stop:	N/A
Open I-LOCK:	The device is interlocked from opening unless all the following are satisfied: • Not 114-TSHH-533 [114-TSHH-433] Temperature (180°F) • 114-XV-413/414 Dampers CLOSED • 114-XV-415/416 [114-XV-515/516] Damper CLOSED or 114-XV-410/409 [114-XV-583/584] Dampers CLOSED • 114-XV-094/095 Damper CLOSED or 114-XV-131/132 Dampers CLOSED
Close I-LOCK:	The device is interlocked from closing unless the following are satisfied: • 114-XV-550 [114-XV-450] PFS Filter Bypass OPEN • 114-XV-583/584/454/455 [114-XV-410/409/436/437] PFS-FILT-109 [PFS-FILT-209] Dampers OPEN

Table D.26. UMCDF Preliminary LIC 1 [LIC 2] PFS PLC Automatic Control Sequence, Advisor PC Screen: **L1F [L2F]**	
Device:	**LIC 1 [LIC 2] Filter Select (PFS-FILT-109 [PFS-FILT-209]) 114-HS-533E [114-HS-433E]**
Advisor PC Tag:	L1F109 [L2F209]
CONR:	C114 [C119]
Driver Word:	3270
Driver Type:	9 (manual mode only)
Auto Start:	N/A
Auto Stop:	N/A
Open I-LOCK:	The device is interlocked from opening unless all the following are satisfied: • Not 114-TSHH-533 [114-TSHH-433] Temperature (180°F) • 114-XV-413/414 Dampers CLOSED • 114-XV-515/516 [114-XV-415/416] Damper CLOSED or 114-XV-583/584 [114-XV-410/409] Dampers CLOSED • 114-XV-094/095 Damper CLOSED or 114-XV-131/132 Dampers CLOSED
Close I-LOCK:	The device is interlocked from closing unless the following are satisfied: • 114-XV-550 [114-XV-450] PFS Filter Bypass OPEN • 114-XV-583/584/515/516/487/488 [114-XV-410/409/415/416/487/488] PFS-FILT-113 Dampers OPEN (FILT-113 used by LIC#1 [LIC#2])
Device:	**LIC 1 [LIC 2] Filter Bypass 114-HS-533A [114-HS-433A]**
Advisor PC Tag:	L1FBYPS [L2FBYPS]
CONR:	C114 [C119]
Driver Word:	3271
Driver Type:	9 (manual mode only)
Auto Start:	N/A
Auto Stop:	N/A
Open I-LOCK:	There are no Interlocks that inhibit the bypass damper from being opened.
Close I-LOCK:	The device is interlocked from closing unless the following are satisfied: • 114-XV-583/584/454/455 [114-XV-410/409/436/437] PFS-FILT-109 [PFS-FILT-209] Dampers OPEN • 114-XV-583/584/515/516/487/488 [114-XV-410/409/415/416/487/488] PFS-FILT-113 Dampers OPEN

Table D.27. UMCDF Preliminary LIC 1 [LIC 2] PFS PLC Automatic Control Sequence, Advisor PC Screen: **L1C [L2C]**

Device:	**PFS-COOL-113A [PFS-COOL-213A] CLEAN LIQUOR COOLER FAN A, 114-HS-231 [114-HS-144]**
Advisor PC Tag:	X114HS231 [X114HS144]
CONR:	C114 [C119]
Driver Word:	3060
Driver Type:	1
Auto Start:	The fan will automatically START if the following conditions are satisfied: • Operator puts device in 'AUTO' and all I-Locks are satisfied.
Auto Stop:	The fan will automatically STOP if the following conditions are satisfied: • Any of the I-Locks are not satisfied.
I-Lock:	The device is interlocked from starting unless all of the following are satisfied: • No LO Temp alarm (114-TIT-240 [114-TIT-130]). • No HI HI Vibration alarm (114-XSHH-227 [114-XSHH-140]). • No HI Speed alarm (114-SI-229 [114-SI-142]).
Device:	**PFS-COOL-113A [PFS-COOL-213A] CLEAN LIQUOR COOLER FAN B, 114-HS-230 [114-HS-143]**
Advisor PC Tag:	X114HS230 [X114HS143]
CONR:	C114 [C119]
Driver Word:	3061
Driver Type:	1
Auto Start:	The fan will automatically START if the following conditions are satisfied: • Operator puts device in 'AUTO' and all I-Locks are satisfied.
Auto Stop:	The fan will automatically STOP if the following conditions are satisfied: • Any of the I-Locks are not satisfied.
I-Lock:	The device is interlocked from starting unless all of the following are satisfied: • No LO Temp alarm (114-TIT-240 [114-TIT-130]). • No HI HI Vibration alarm (114-XSHH-225 [114-XSHH-138]). • No HI Speed alarm (114-SI-228 [114-SI-141]).
Device:	**PFS-COOL-113B [PFS-COOL-213B] CLEAN LIQUOR COOLER FAN A, 114-HS-215 [114-HS-646]**
Advisor PC Tag:	X114HS215 [X114HS646]
CONR:	C114 [C119]
Driver Word:	3062
Driver Type:	1
Auto Start:	The fan will automatically START if the following conditions are satisfied: • Operator puts device in 'AUTO' and all I-Locks are satisfied.
Auto Stop:	The fan will automatically STOP if the following conditions are satisfied: • Any of the I-Locks are not satisfied.

Table D.27. UMCDF Preliminary LIC 1 [LIC 2] PFS PLC Automatic Control Sequence, Advisor PC Screen: **L1C [L2C]**	
I-Lock:	The device is interlocked from starting unless all of the following are satisfied: • No LO Temp alarm (114-TIT-207 [114-TIT-632]). • No HI HI Vibration alarm (114-XSHH-211 [114-XSHH-642]). • No HI Speed alarm (114-SI-213 [114-SI-644]).
Device:	**PFS-COOL-113B [PFS-COOL-213B] CLEAN LIQUOR COOLER FAN B, 114-HS-214 [114-HS-645]**
Advisor PC Tag:	X114HS214 [X114HS645]
CONR:	C114 [C119]
Driver Word:	3063
Driver Type:	1
Auto Start:	The fan will automatically START if the following conditions are satisfied: • Operator puts device in 'AUTO' and all I-Locks are satisfied.
Auto Stop:	The fan will automatically STOP if the following conditions are satisfied: • Any of the I-Locks are not satisfied.
I-Lock:	The device is interlocked from starting unless all of the following are satisfied: • No LO Temp alarm (114-TIT-207 [114-TIT-632]). • No HI HI Vibration alarm (114-XSHH-209 [114-XSHH-640). • No HI Speed alarm (114-SI-212 [114-SI-643]).

APPENDIX E

Operator Screens

Appendix E contains TOCDF Advisor PC screens associated with operation and control of the PAS, *ANCDF Advisor PC screens for the PAS and PFS*, and preliminary UMCDF PFS Advisor PC screens. The TOCDF PAS screens are based on the TOCDF control code as of *April 2001*. Since TOCDF will not have a PFS, there are no PFS Advisor PC screens in this appendix for TOCDF. *The ANCDF PAS/PFS screens are based on the April 2001 ANCDF control code.* The preliminary UMCDF PFS Advisor PC screens were generated by the EIC and represent the status of the UMCDF control system as of April 29,1999. Table E.1 provides an index to the PAS*/PFS* screens *that are included in this appendix.* As final PAS/PFS Advisor PC screens are generated for PBCDF and UMCDF, they will be *added to* this appendix.

Table E.1 PAS*/PFS* Advisor PC Screens

AN Fig #	*TE Fig #*	*UM Fig #*	Advisor PC Screen Name	Process Screen
E-1	*E-25*	*TBD*[a]	DFS PAS Quench	DFQ
E-2	*E-26*	*TBD*[a]	DFS PAS Venturi	DFV
E-3	*E-27*	*TBD*[a]	DFS PAS Scrubber	DFS
E-4	*E-28*	*TBD*[a]	DFS PAS *Mist Eliminator*	DFD
E-5	*E-29*	*TBD*[a]	DFS Induced Draft	DFI
NA	*E-30*	*NA*	DFS Emergency Induced Draft	DFE
E-6	*NA*	*E-50*	*DFS Clean Liquor Cooler 1*	*DC1*
E-7	*NA*	*E-51*	*DFS Clean Liquor Cooler 2*	*DC2*
E-8	*NA*	*E-52*	*DFS PAS Filter System*	*DFF*
NA	*E-31*	*TBD*[a]	LIC 1 PAS Quench	LQ1
NA	*E-32*	*TBD*[a]	LIC 1 PAS Venturi	LV1
NA	*E-33*	*TBD*[a]	LIC 1 PAS Scrubber	LS1
NA	*E-34*	*TBD*[a]	LIC 1 PAS *Mist Eliminator*	LD1
E-13	*E-35*	*TBD*[a]	LIC PAS Spare *Mist Eliminator*	LDS
NA	*E-36*	*TBD*[a]	LIC 1 Induced Draft	LI1
NA	*NA*	*E-53*	*LIC1 Clean Liquor Cooler*	*L1C*
NA	*NA*	*E-54*	*LIC1 PAS Filter System*	*L1F*
E-9	*E-37*	*TBD*[a]	LIC 2 PAS Quench	LQ2
E-10	*E-38*	*TBD*[a]	LIC 2 PAS Venturi	LV2
E-11	*E-39*	*TBD*[a]	LIC 2 PAS Scrubber	LS2
E-12	*E-40*	*TBD*[a]	LIC 2 PAS *Mist Eliminator*	LD2

Table E.1 (Cont'd)

AN Fig #	TE Fig #	UM Fig #	Advisor PC Screen Name	Process Screen
E-14	*E-41*	*TBD*[a]	LIC 2 Induced Draft	LI2
E-15	*NA*	*E-55*	*LIC2 Clean Liquor Cooler*	*L2C*
E-16	*NA*	*E-56*	*LIC2 PAS Filter System*	*L2F*
E-17	*E-42*	*TBD*[a]	MPF PAS Quench	MPQ
E-18	*E-43*	*TBD*[a]	MPF PAS Venturi	MPV
E-19	*E-44*	*TBD*[a]	MPF PAS Scrubber	MPS
E-20	*E-45*	*TBD*[a]	MPF PAS *Mist Eliminator*	MPD
E-21	*E-46*	*TBD*[a]	MPF/DFS PAS Spare *Mist Eliminator*	MDS
E-22	*E-47*	*TBD*[a]	MPF Induced Draft	MPI
NA	*E-48*	*NA*	MPF Emergency Induced Draft	MPE
E-23	*NA*	*E-57*	MPF Clean Liquor Cooler	MFC
E-24	*NA*	*E-58*	MPF PAS Filter System	MFF
TBD[a]	*E-49*	*TBD*[a]	*Recovered Water System*	*RWS*

[a] *These ANCDF and UMCDF screens were not available when this FAWB was prepared.*

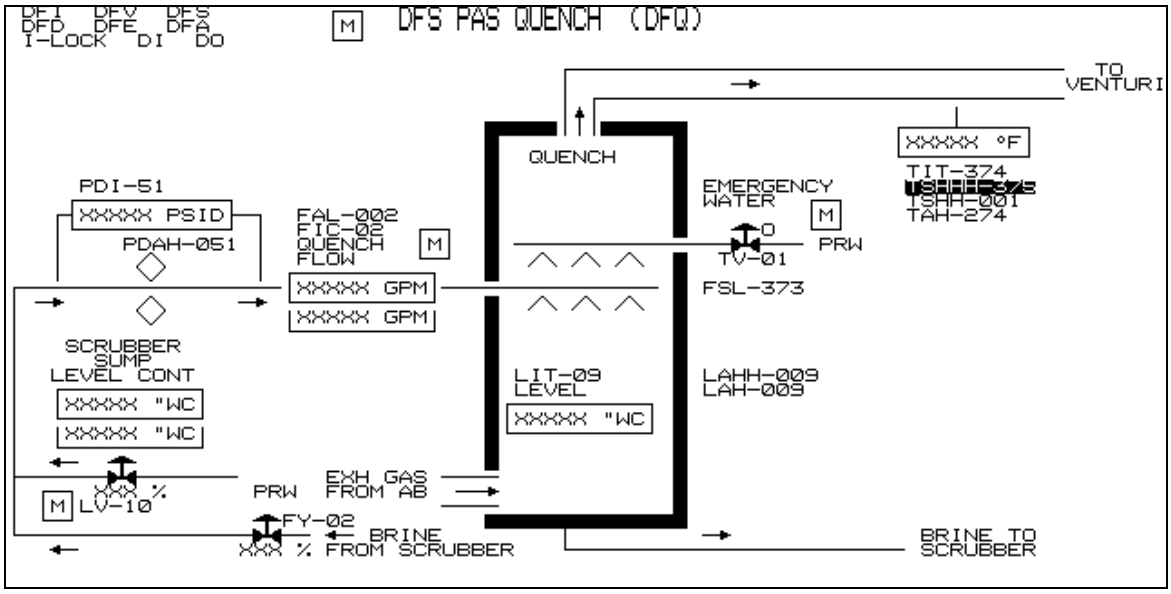

Figure E-1. ANCDF Advisor PC Screen DFS PAS Quench (DFQ)

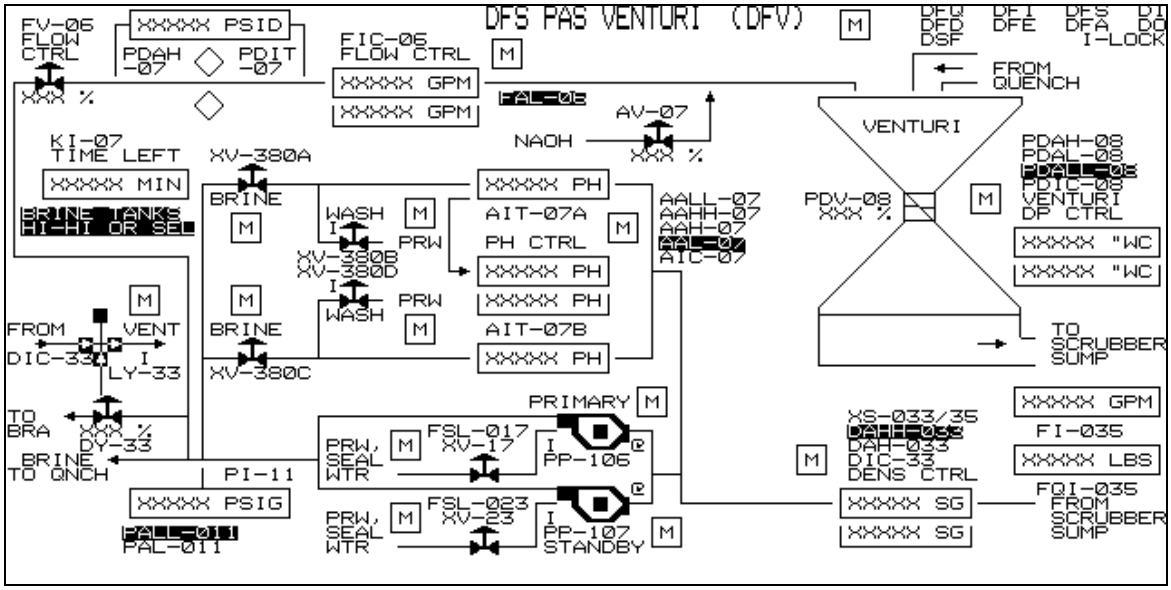

Figure E-2. ANCDF Advisor PC Screen DFS PAS Venturi (DFV)

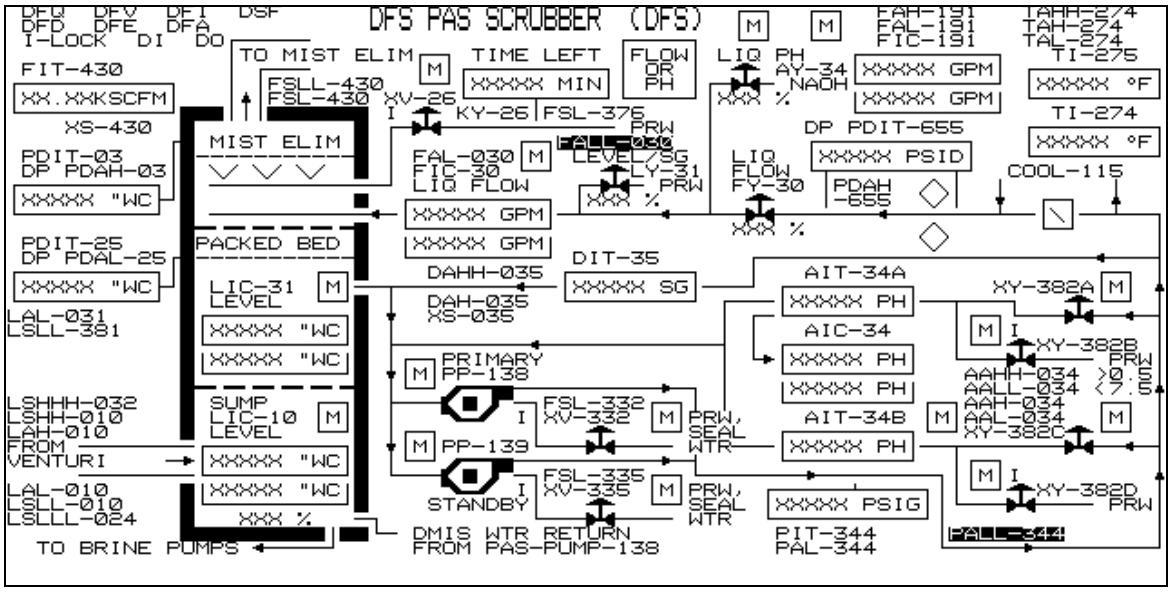

Figure E-3. ANCDF Advisor PC Screen DFS PAS Scrubber (DFS)

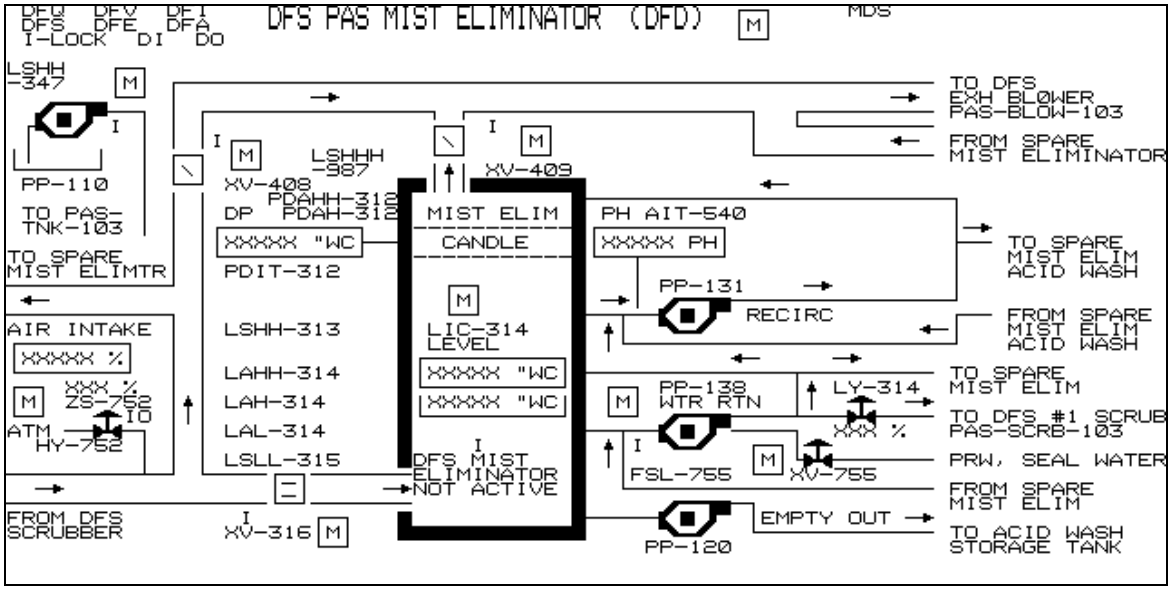

Figure E-4. ANCDF Advisor PC Screen DFS PAS Mist Eliminator (DFD)

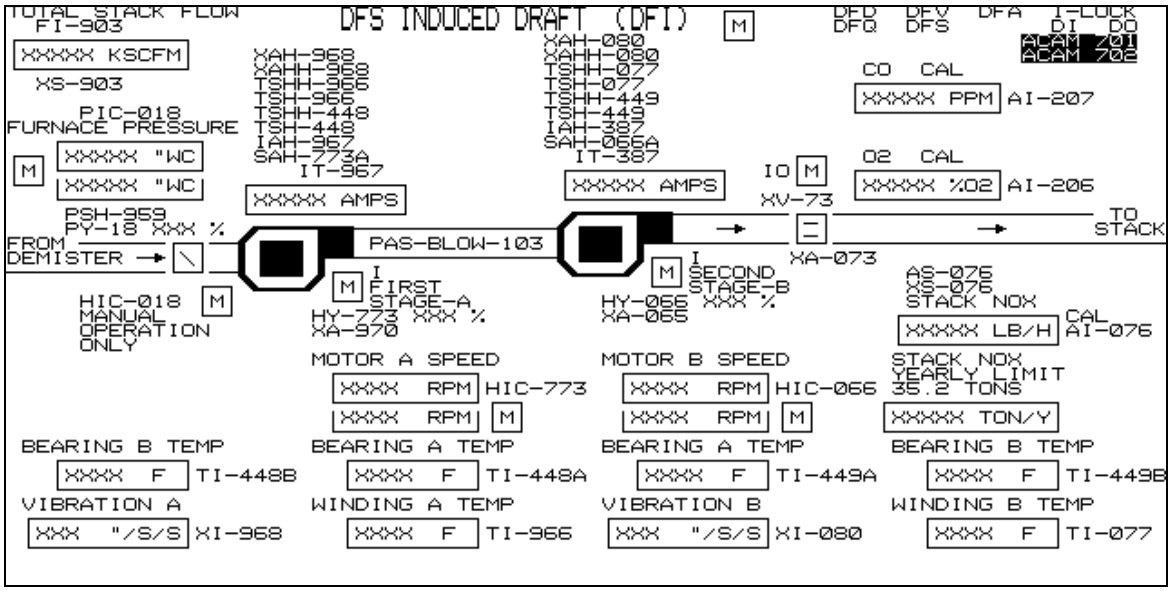

Figure E-5. ANCDF Advisor PC Screen DFS Induced Draft (DFI)

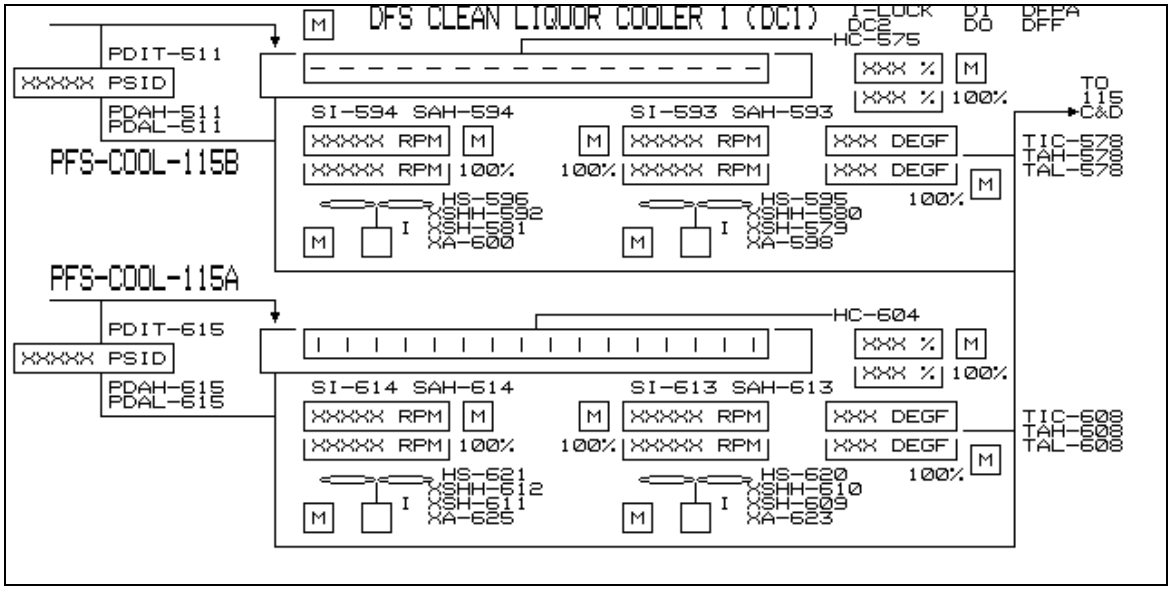

Figure E-6. ANCDF Advisor PC Screen DFS Clean Liquor Cooler 1 (DC1)

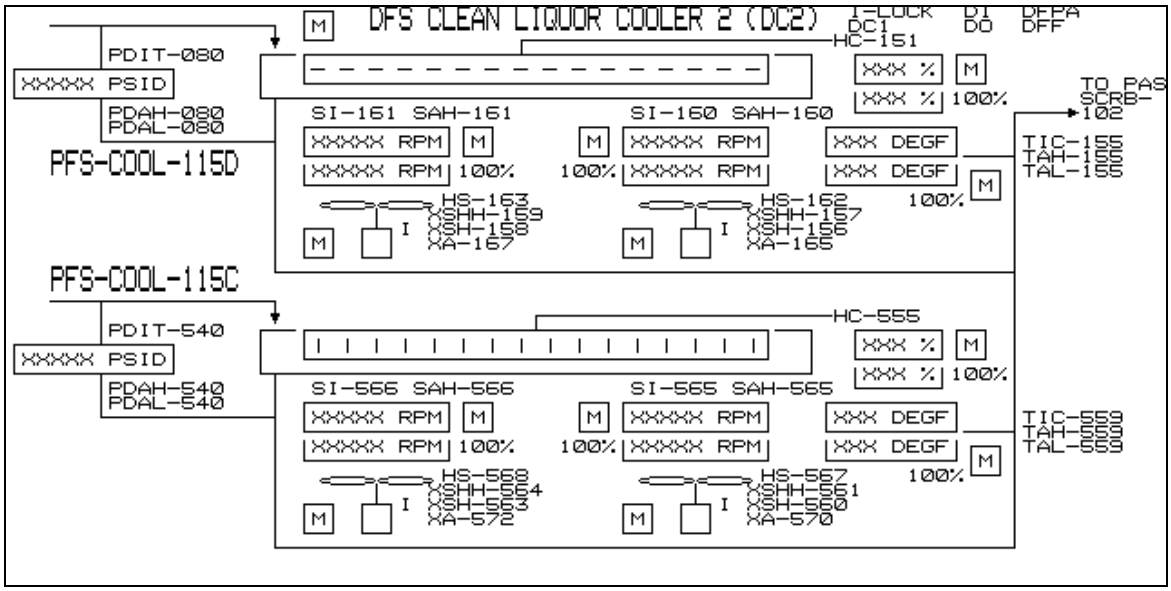

Figure E-7. ANCDF Advisor PC Screen DFS Clean Liquor Cooler 2 (DC2)

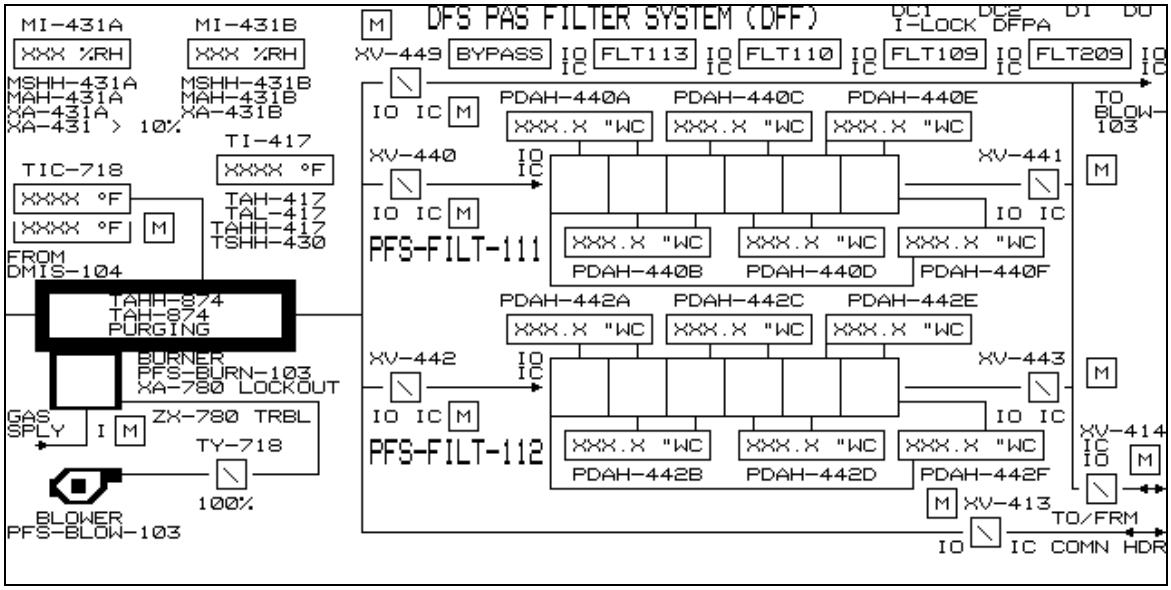

Figure E-8. ANCDF Advisor PC Screen DFS PAS Filter System (DFF)

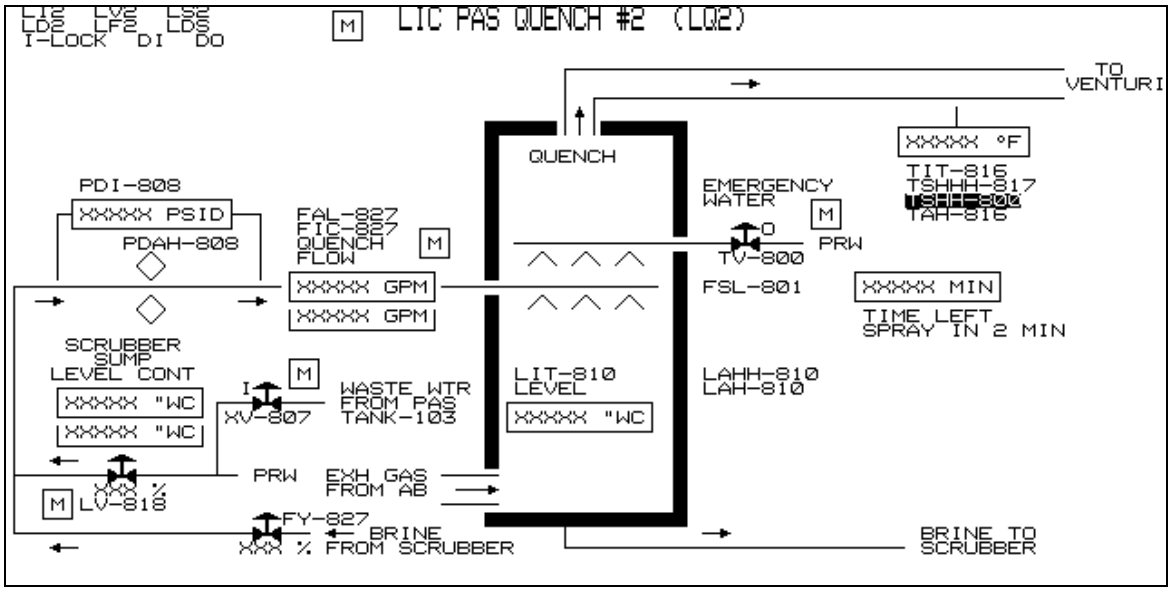

Figure E-9. ANCDF Advisor PC Screen LIC PAS Quench (LQ2)

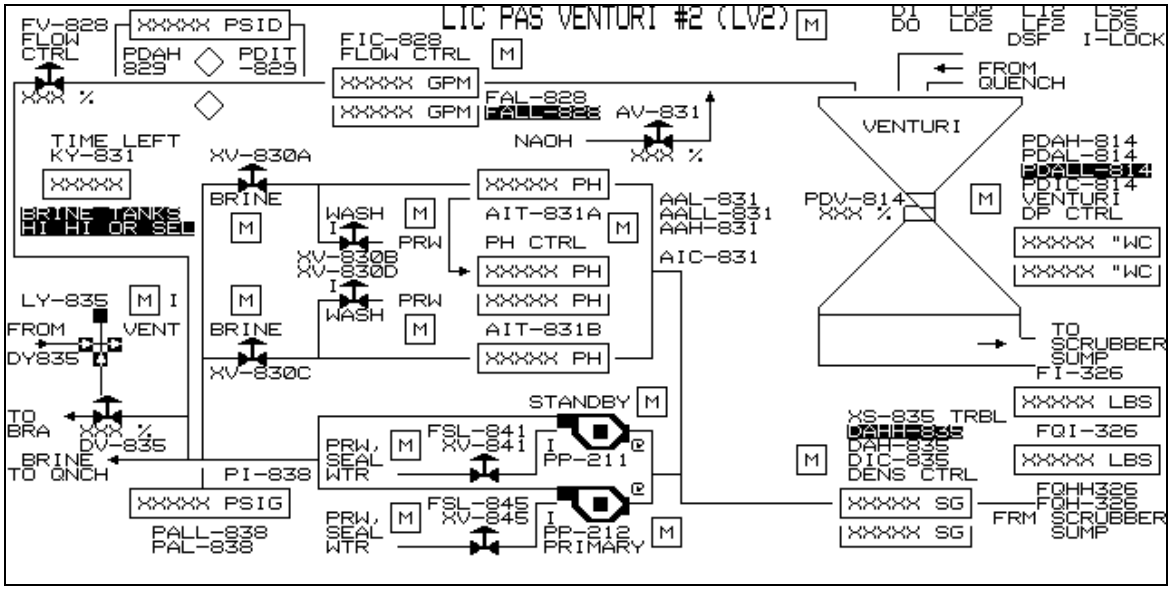

Figure E-10. ANCDF Advisor PC Screen LIC PAS Venturi (LV2)

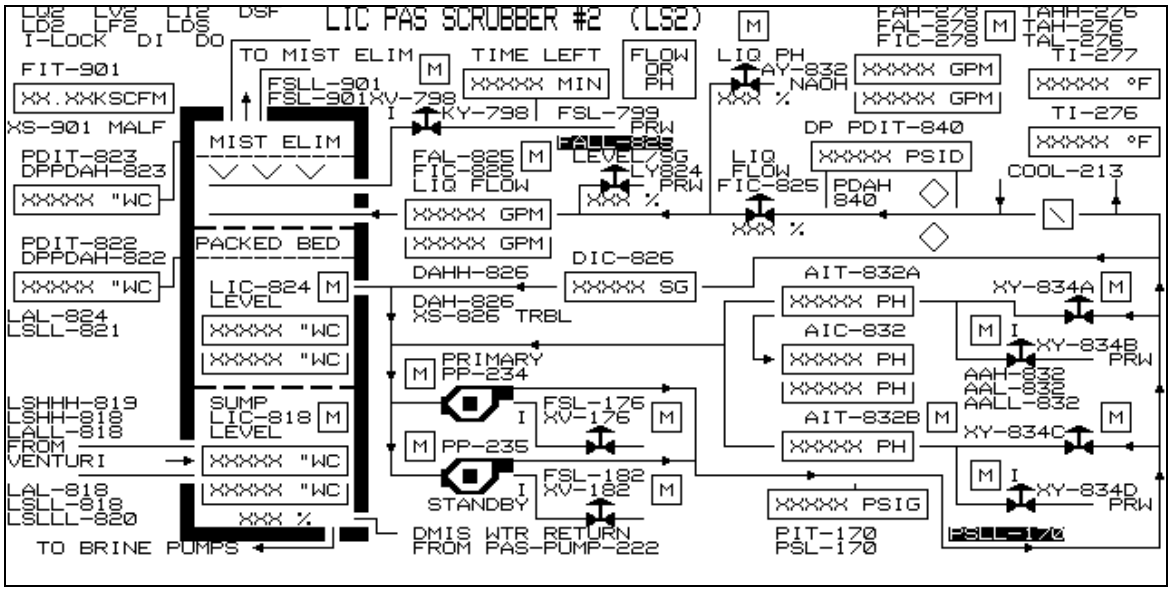

Figure E-11. ANCDF Advisor PC Screen LIC PAS Scrubber (LS2)

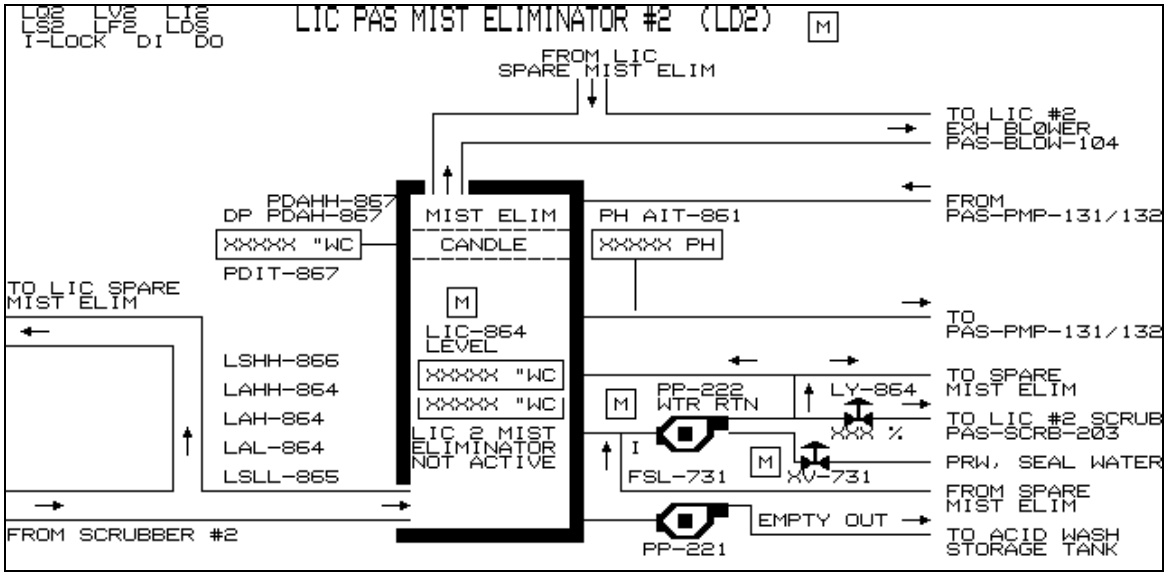

Figure E-12. ANCDF Advisor PC Screen LIC PAS Mist Eliminator (LD2)

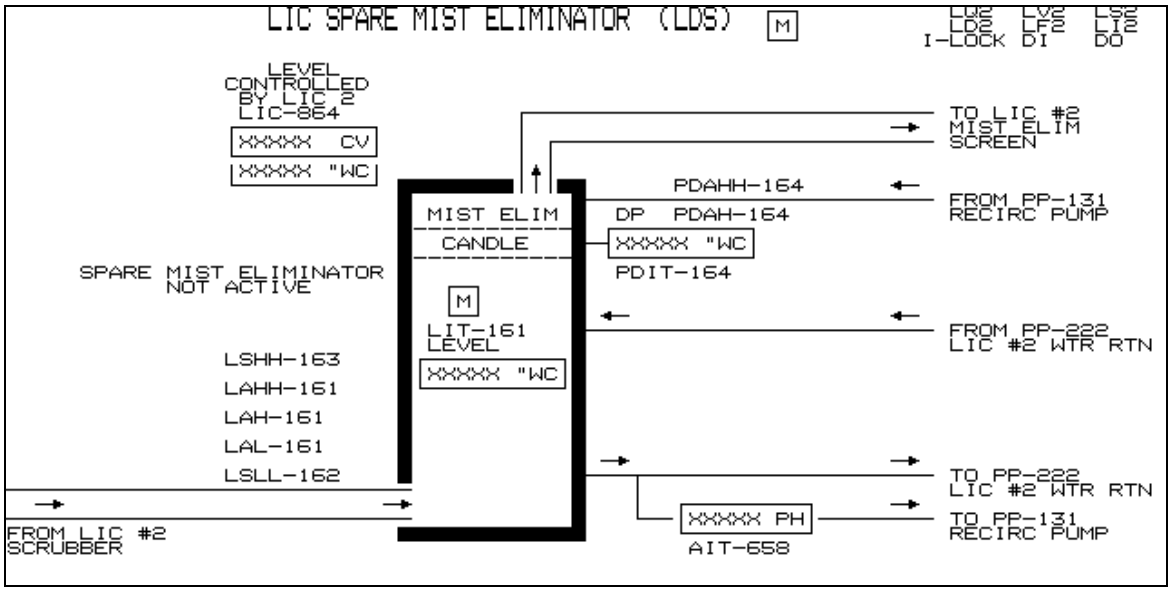

Figure E-13. ANCDF Advisor PC Screen LIC PAS Spare Mist Eliminator (LDS)

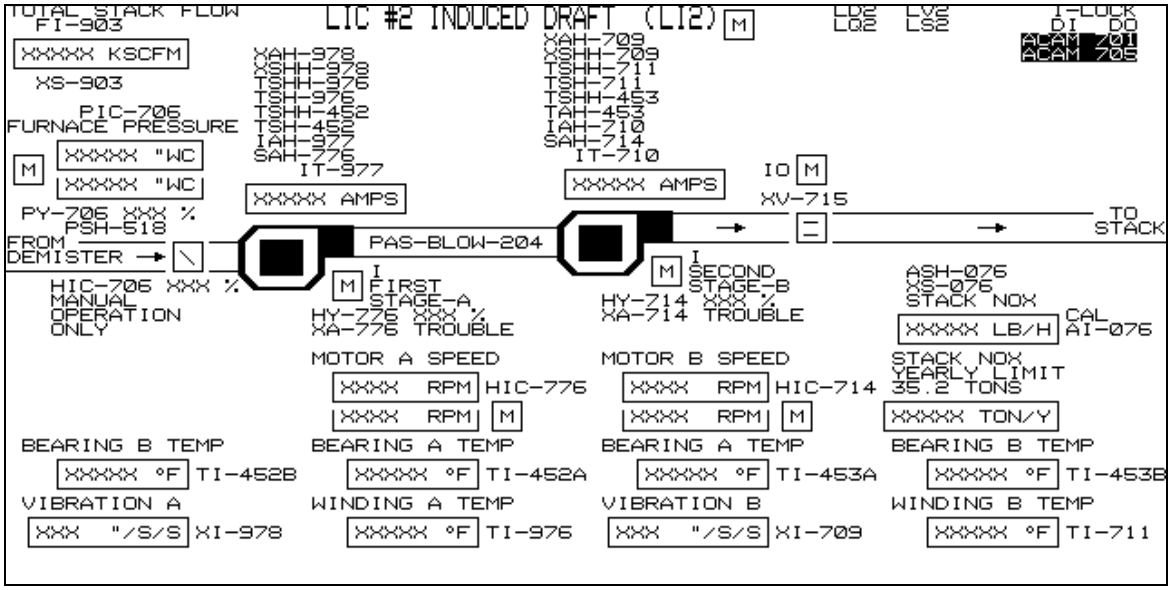

Figure E-14. ANCDF Advisor PC Screen LIC Induced Draft (LI2)

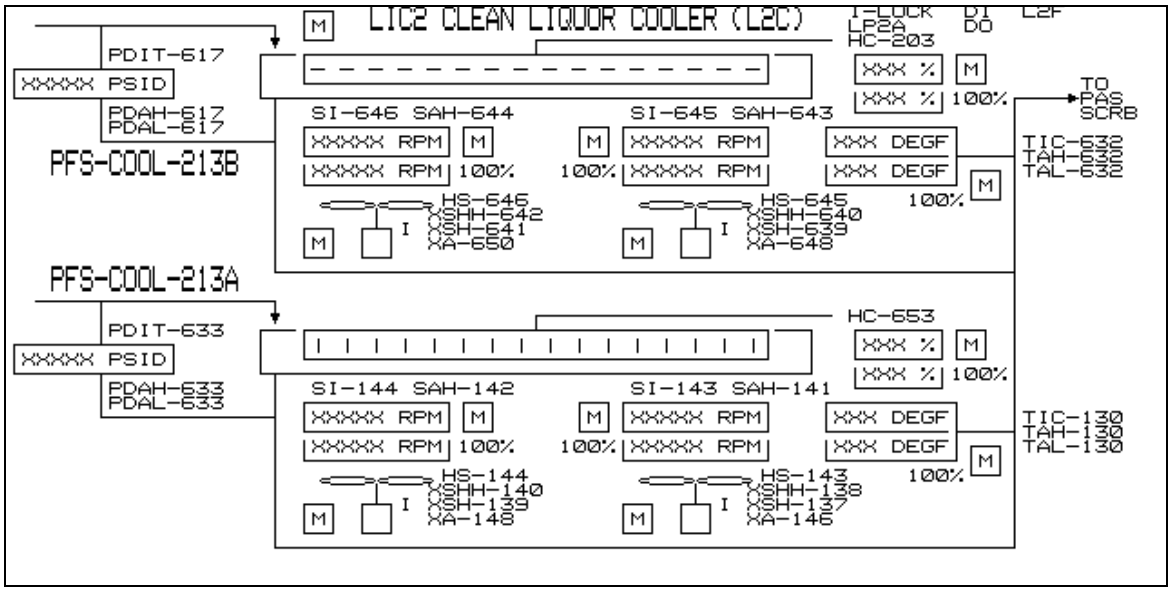

Figure E-15. ANCDF Preliminary Advisor PC Screen LIC Clean Liquor Cooler (L2C)

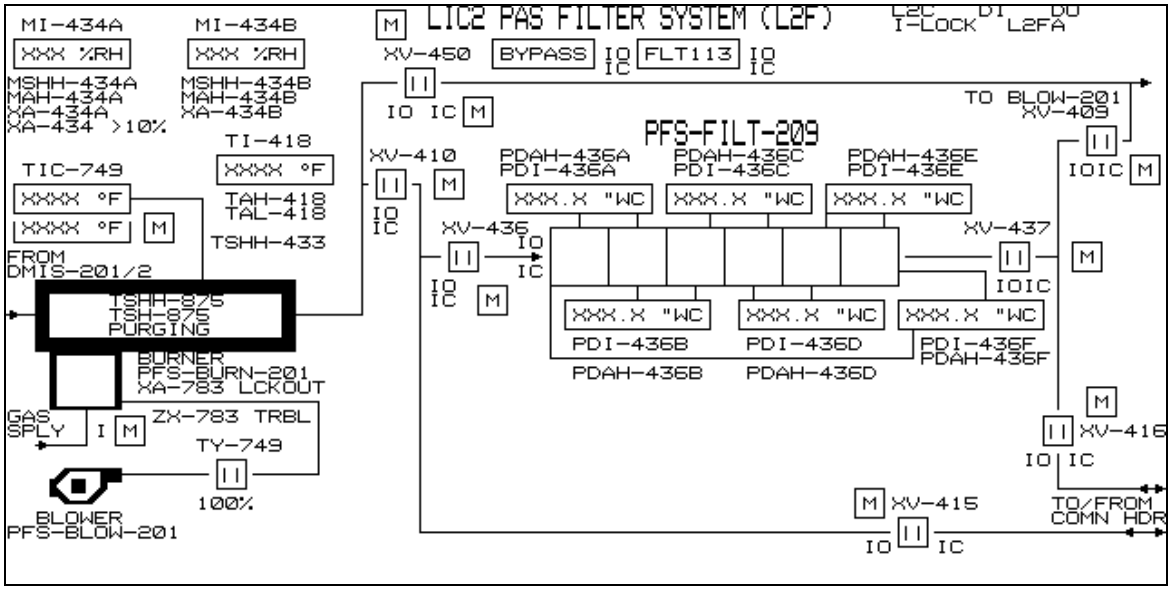

Figure E-16. ANCDF Preliminary Advisor PC Screen LIC PAS Filter System (L2F)

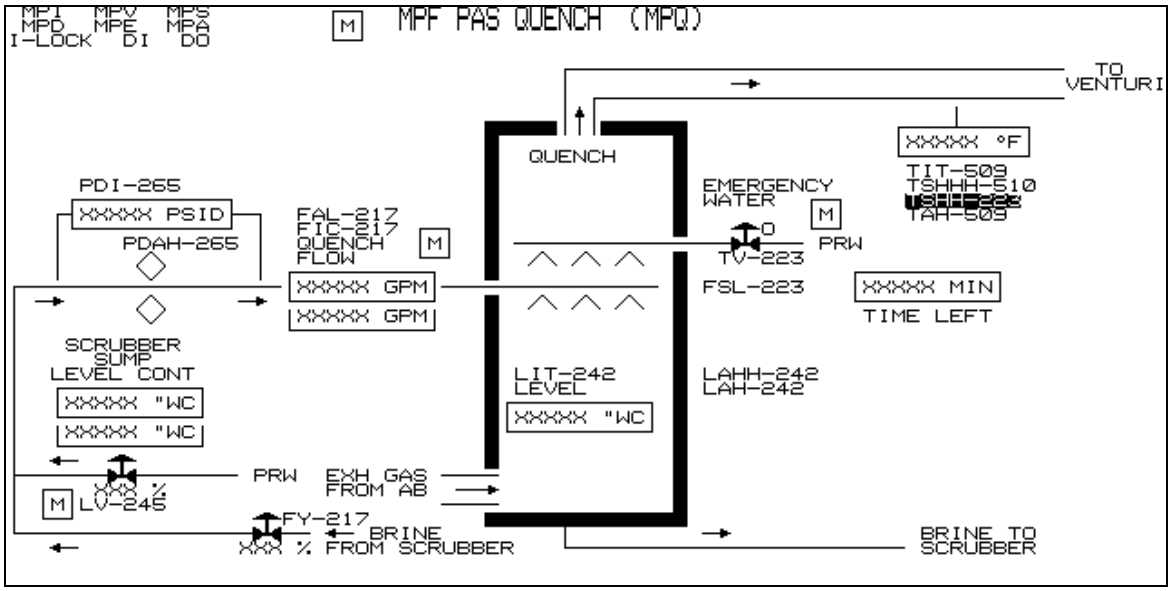

Figure E-17. ANCDF Advisor PC Screen MPF PAS Quench (MPQ)

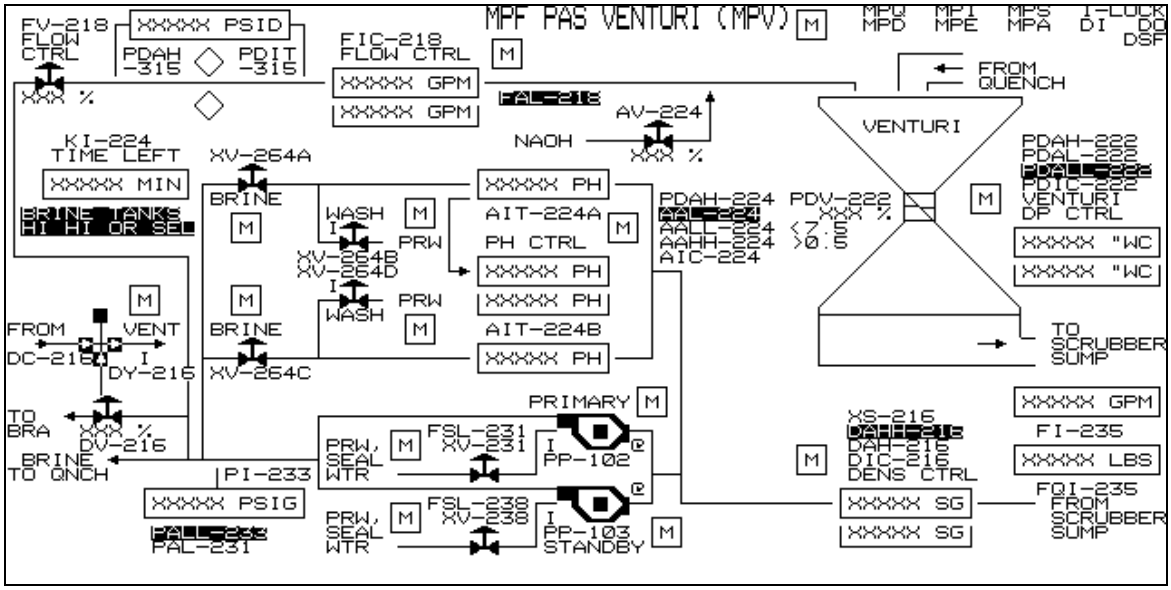

Figure E-18. ANCDF Advisor PC Screen MPF PAS Venturi (MPV)

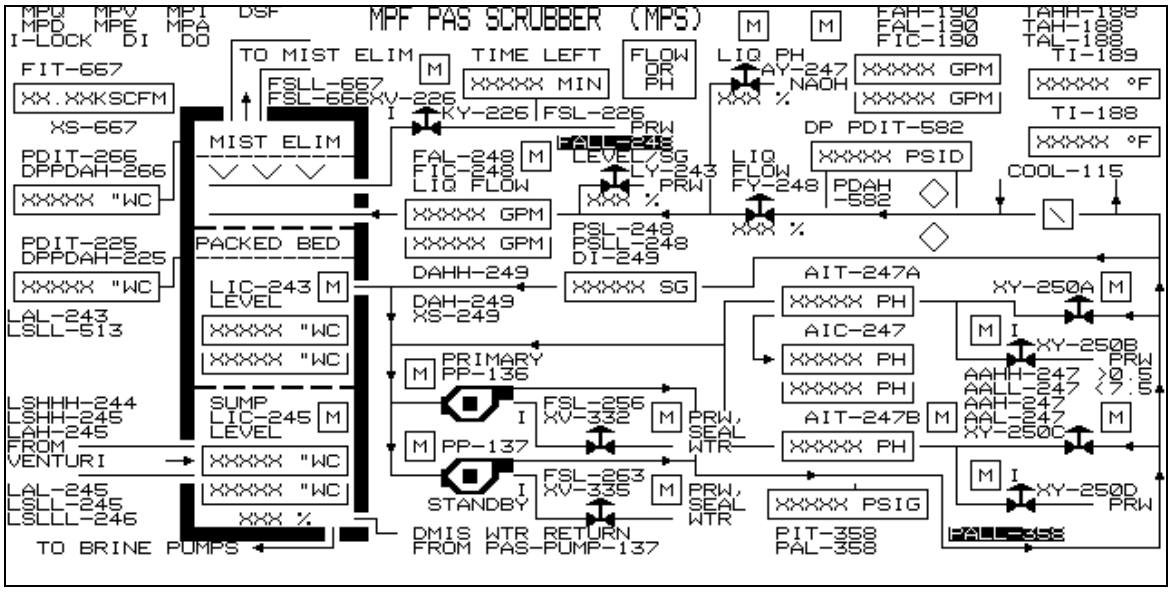

Figure E-19. ANCDF Advisor PC Screen MPF PAS Scrubber (MPS)

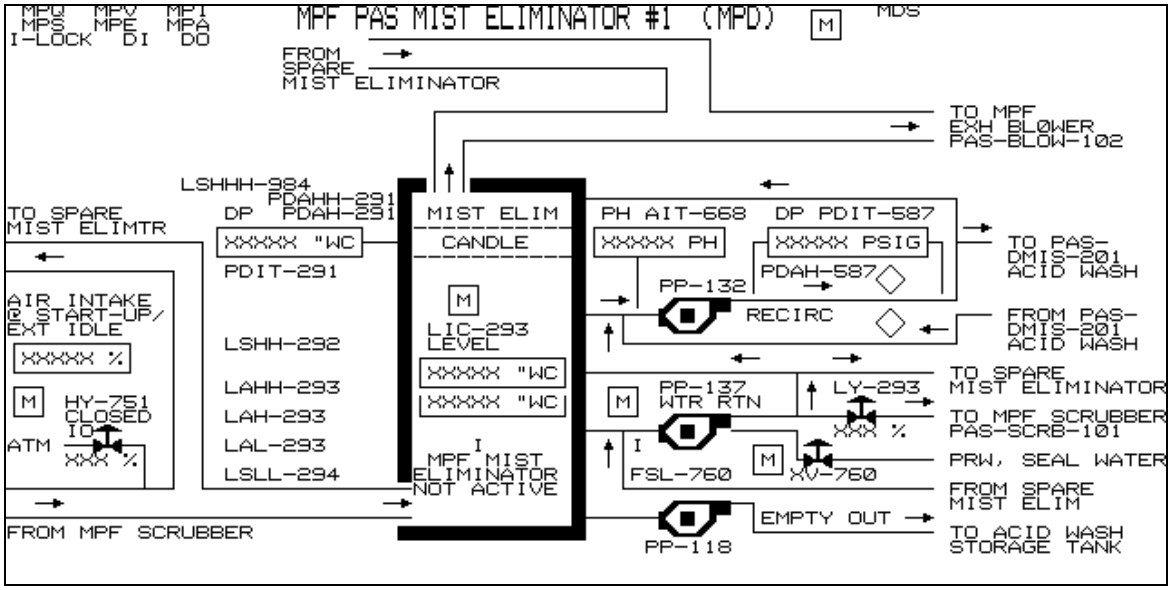

Figure E-20. ANCDF Advisor PC Screen MPF PAS Mist Eliminator (MPD)

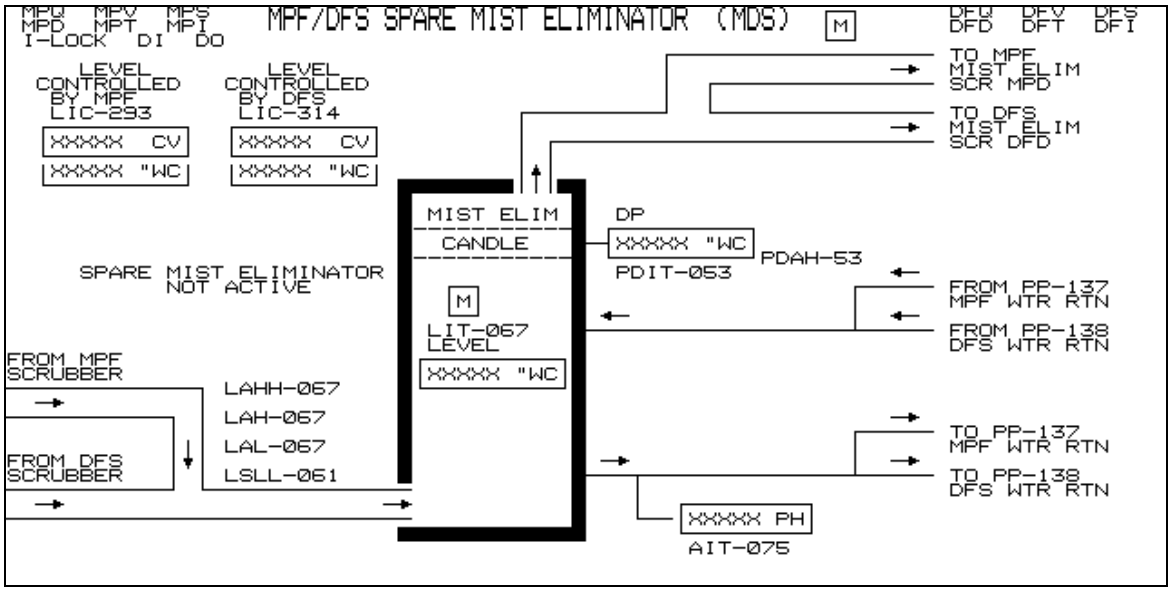

Figure E-21. ANCDF Advisor PC Screen MPF/DFS PAS Spare Mist Eliminator (MDS)

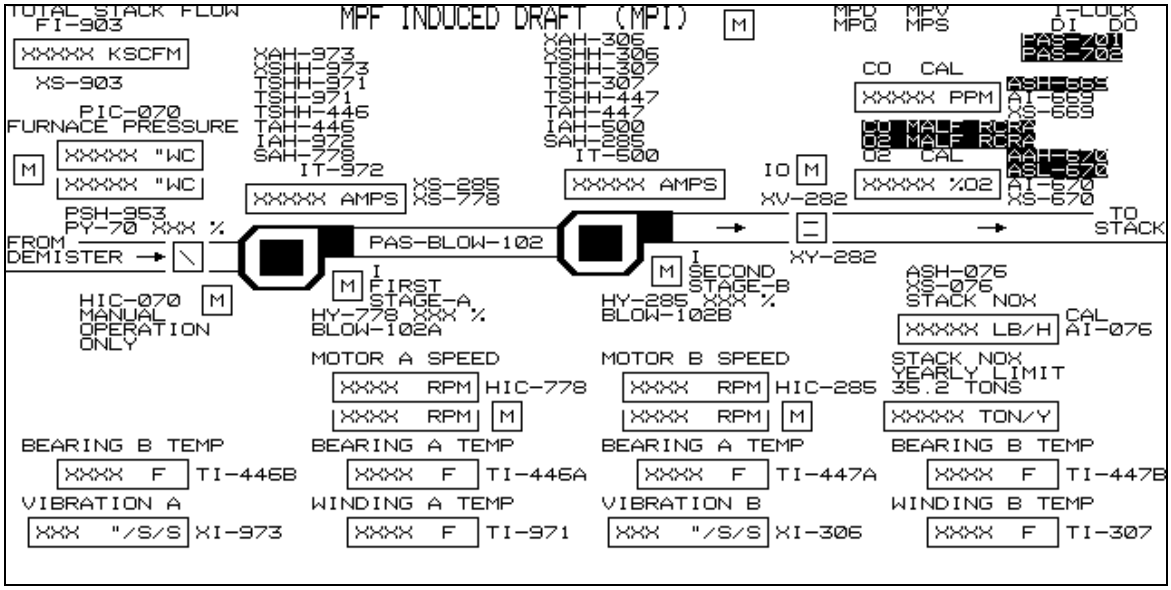

Figure E-22. ANCDF Advisor PC Screen MPF Induced Draft (MPI)

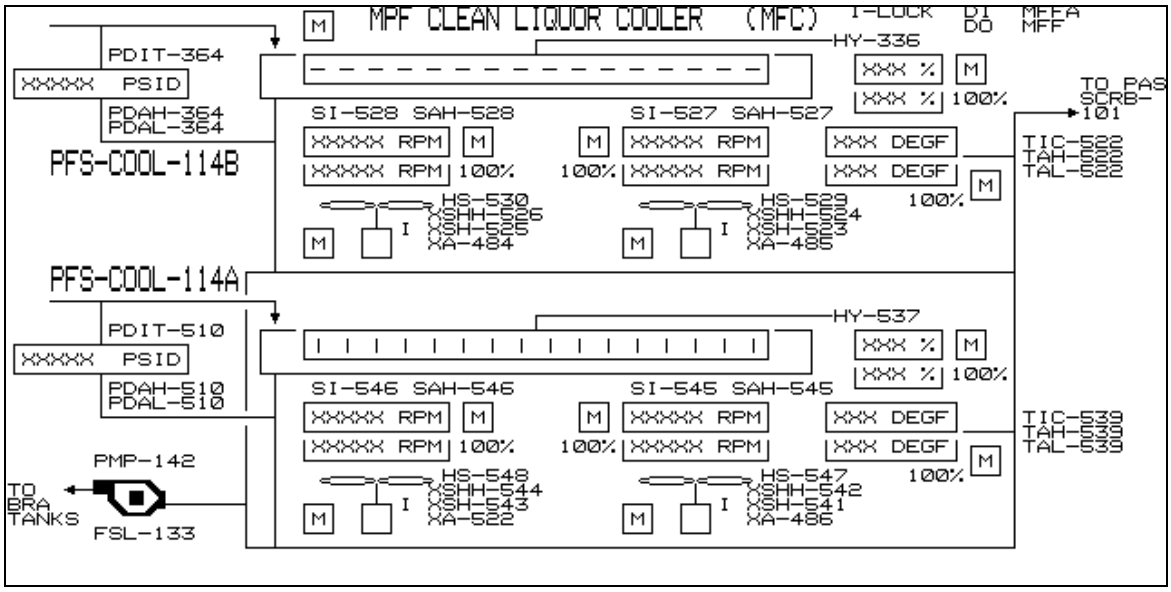

Figure E-23. ANCDF Preliminary Advisor PC Screen MPF Clean Liquor Cooler (MFC)

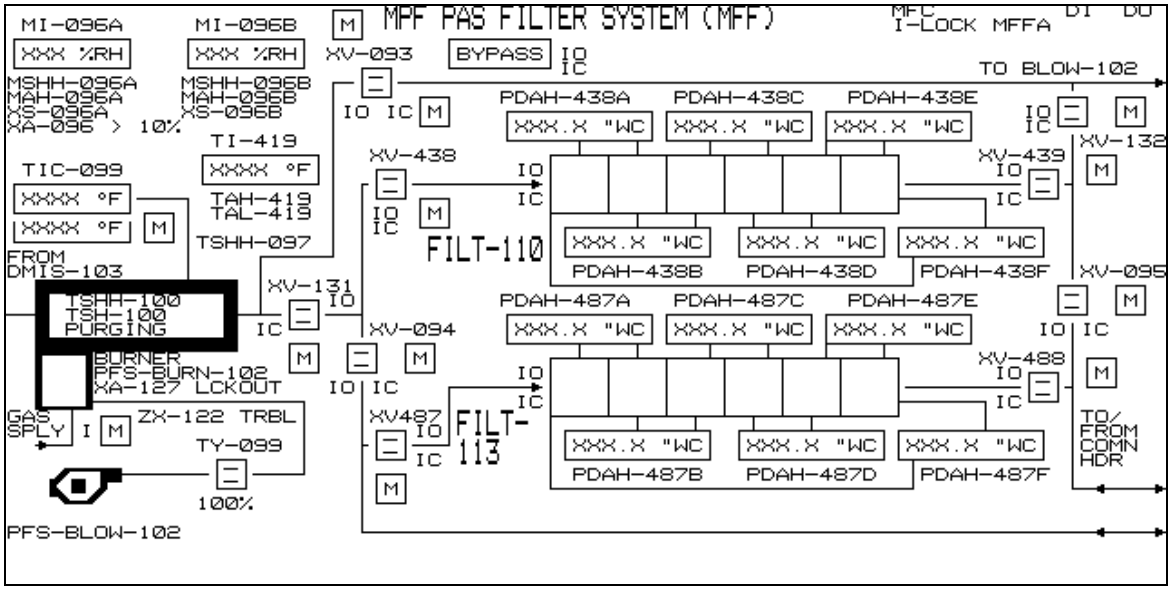

Figure E-24. ANCDF Preliminary Advisor PC Screen MPF PAS Filter System (MFF)

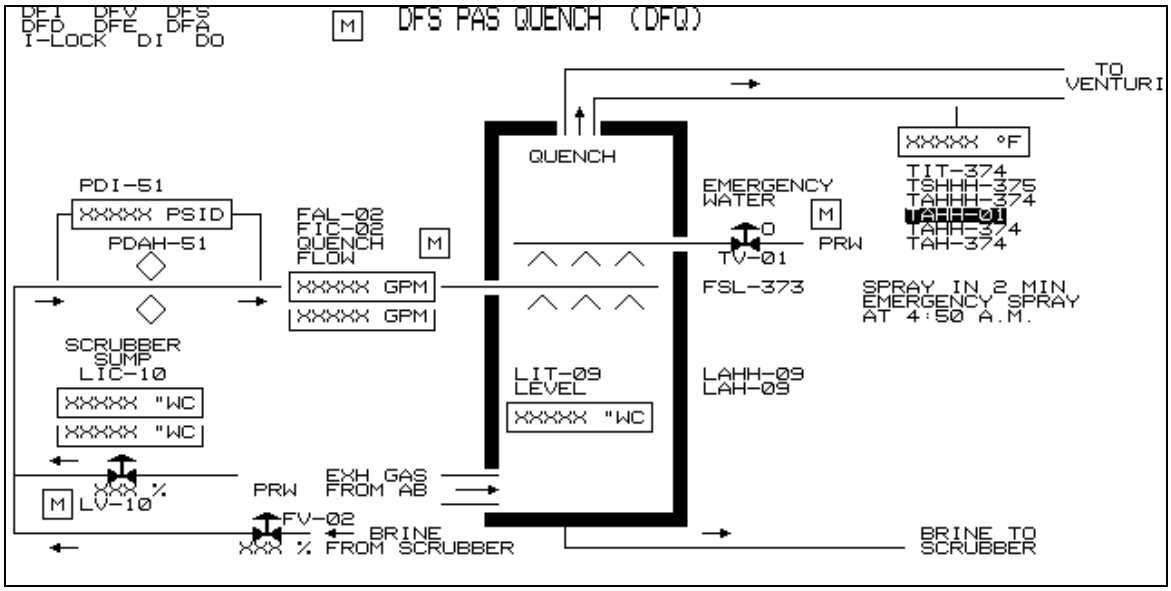

Figure E-*25*. TOCDF Advisor PC Screen DFS PAS Quench (DFQ)

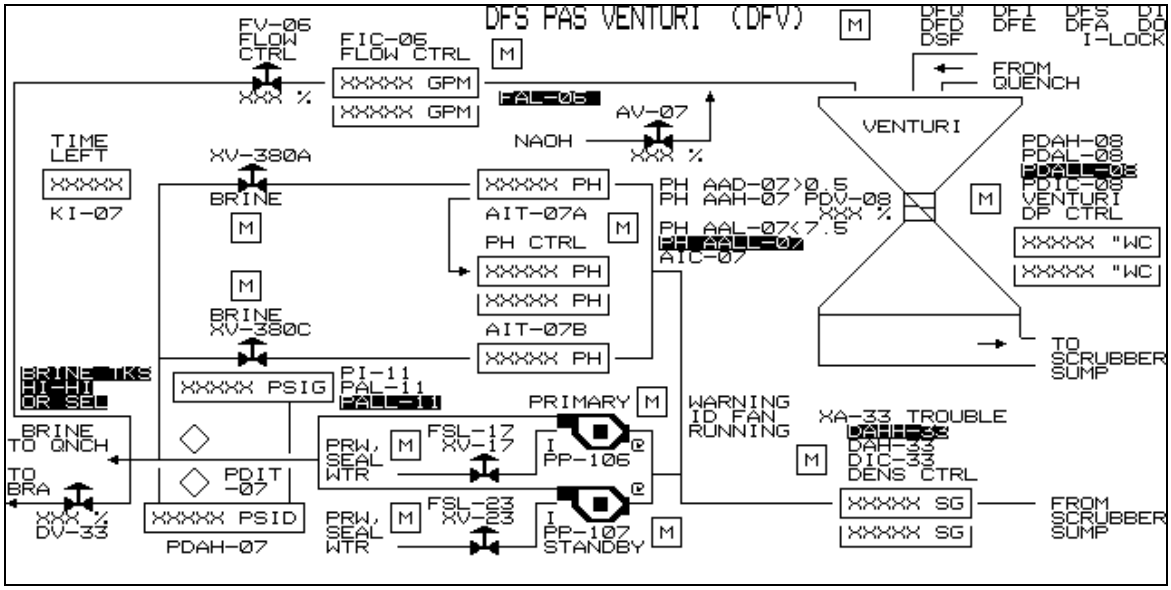

Figure E-*26*. TOCDF Advisor PC Screen DFS PAS Venturi (DFV)

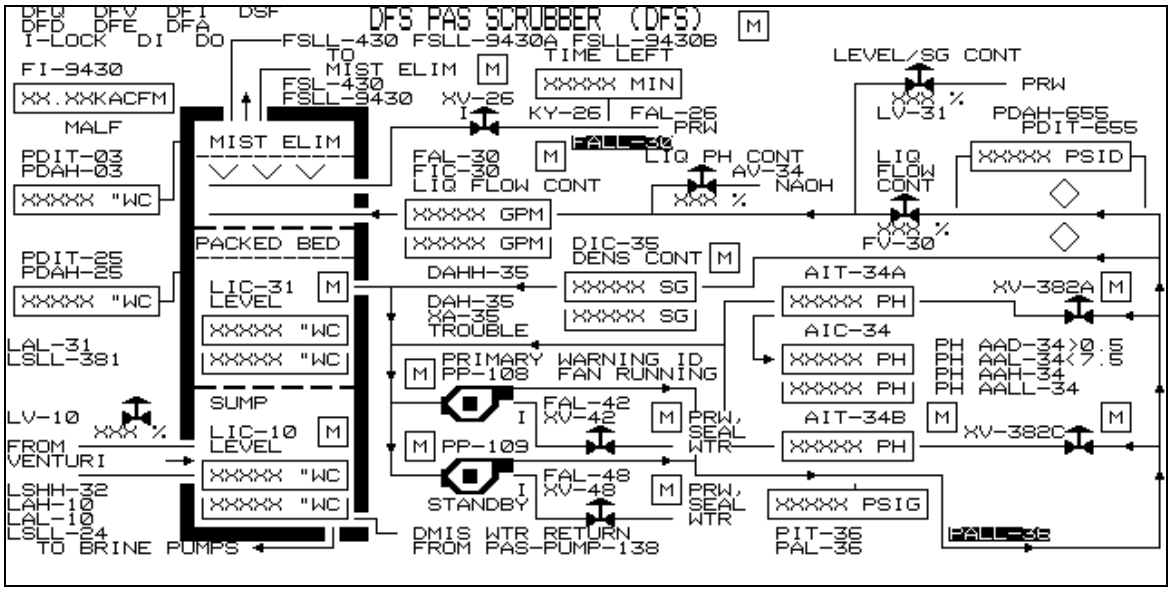

Figure E-*27*. TOCDF Advisor PC Screen DFS PAS Scrubber (DFS)

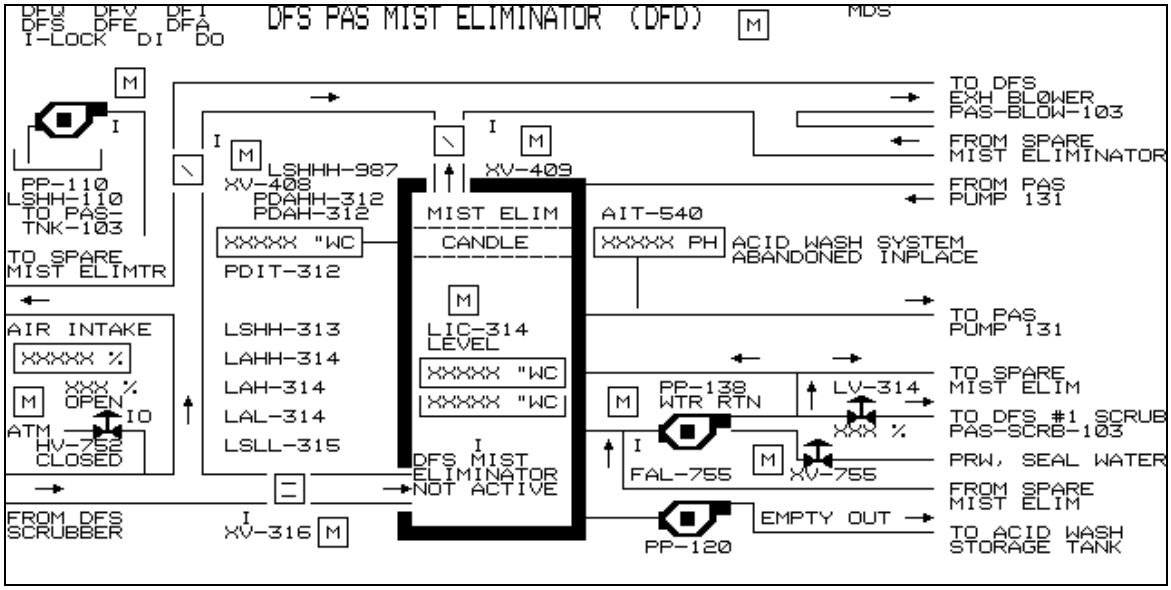

Figure E-*28*. TOCDF Advisor PC Screen DFS PAS *Mist Eliminator* (DFD)

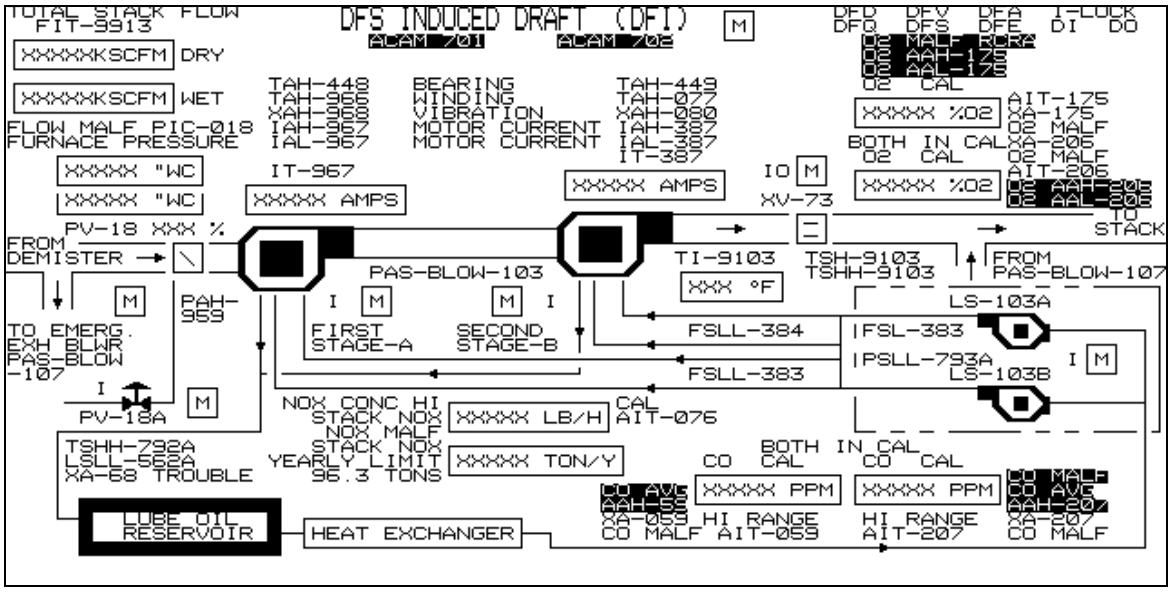

Figure E-*29*. TOCDF Advisor PC Screen DFS Induced Draft (DFI)

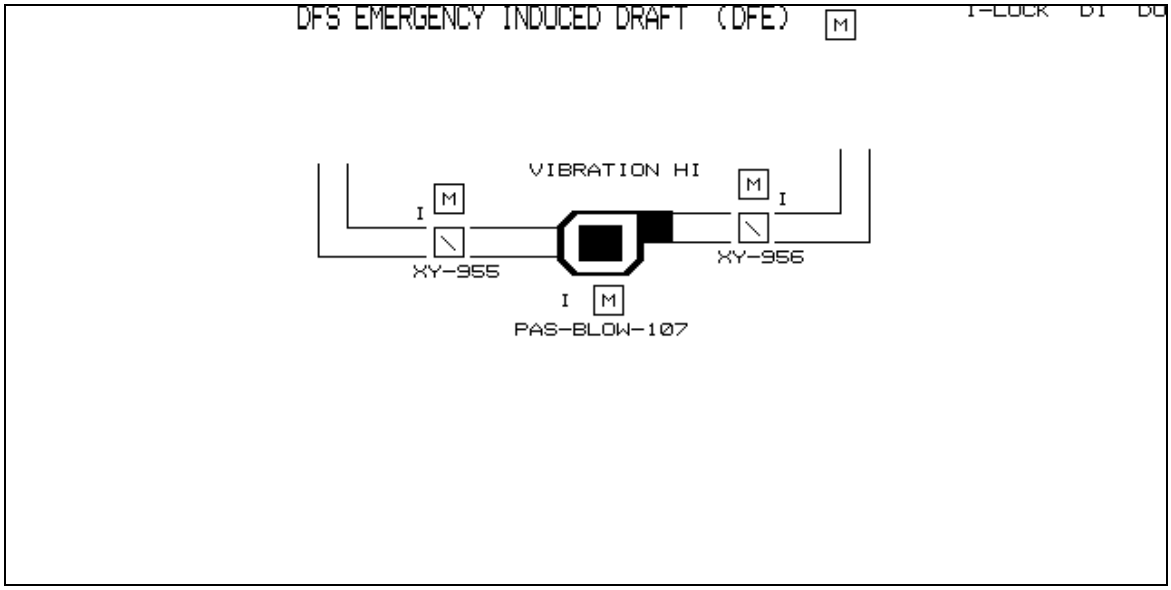

Figure E-*30*. TOCDF Advisor PC Screen DFS Emergency Induced Draft (DFE)

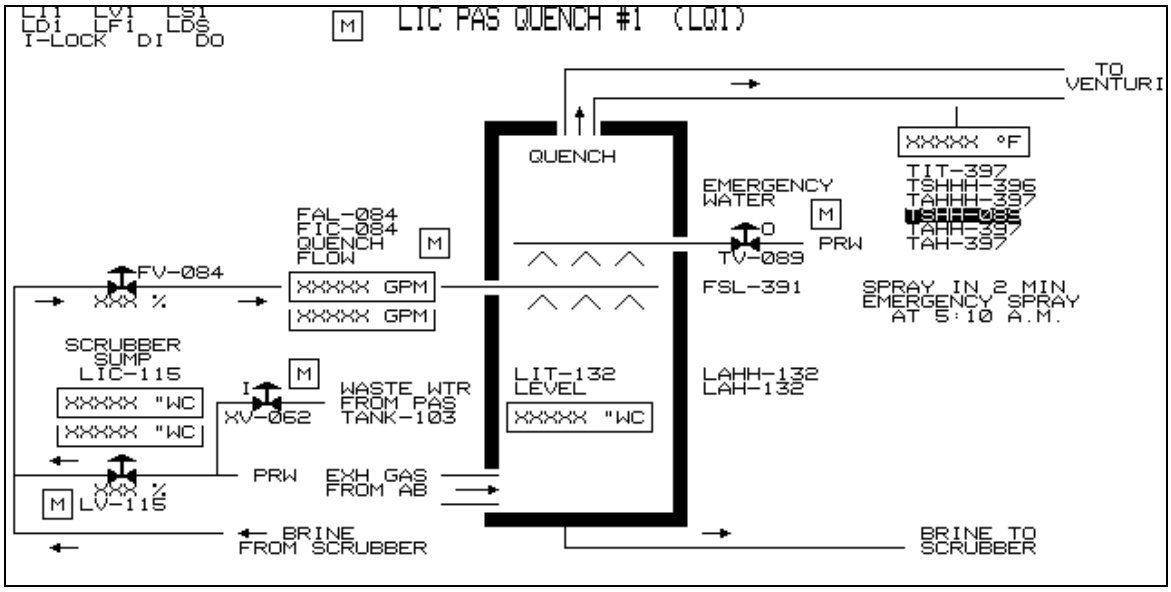

Figure E-*31*. TOCDF Advisor PC Screen LIC 1 PAS Quench (LQ1)

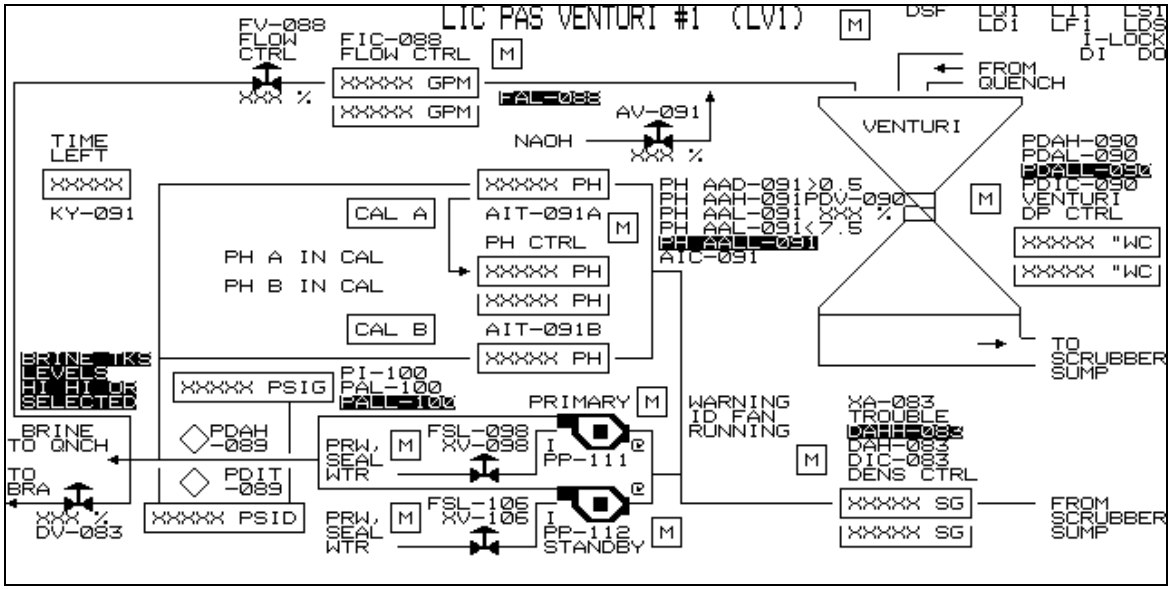

Figure E-*32*. TOCDF Advisor PC Screen LIC 1 PAS Venturi (LV1)

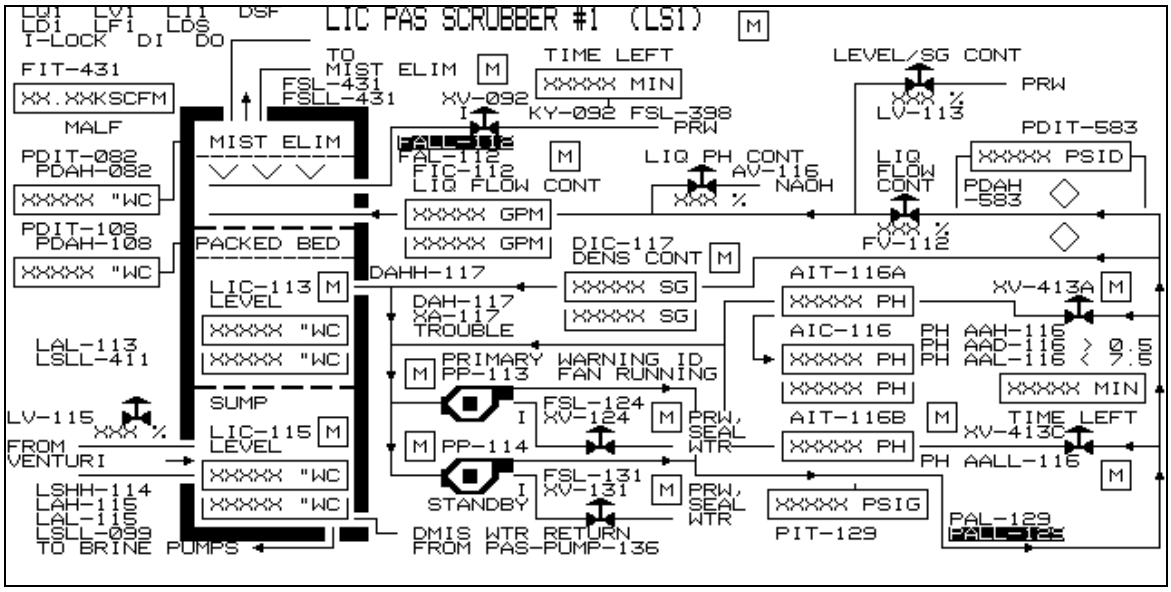

Figure E-*33*. TOCDF Advisor PC Screen LIC 1 PAS Scrubber (LS1)

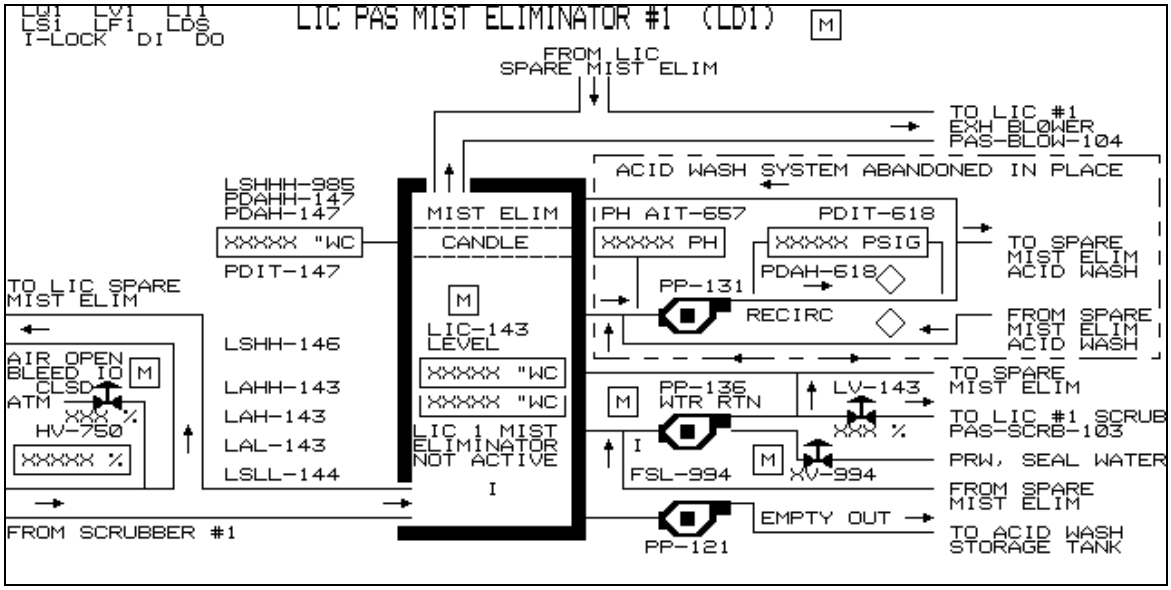

Figure E-*34*. TOCDF Advisor PC Screen LIC 1 PAS *Mist Eliminator* (LD1)

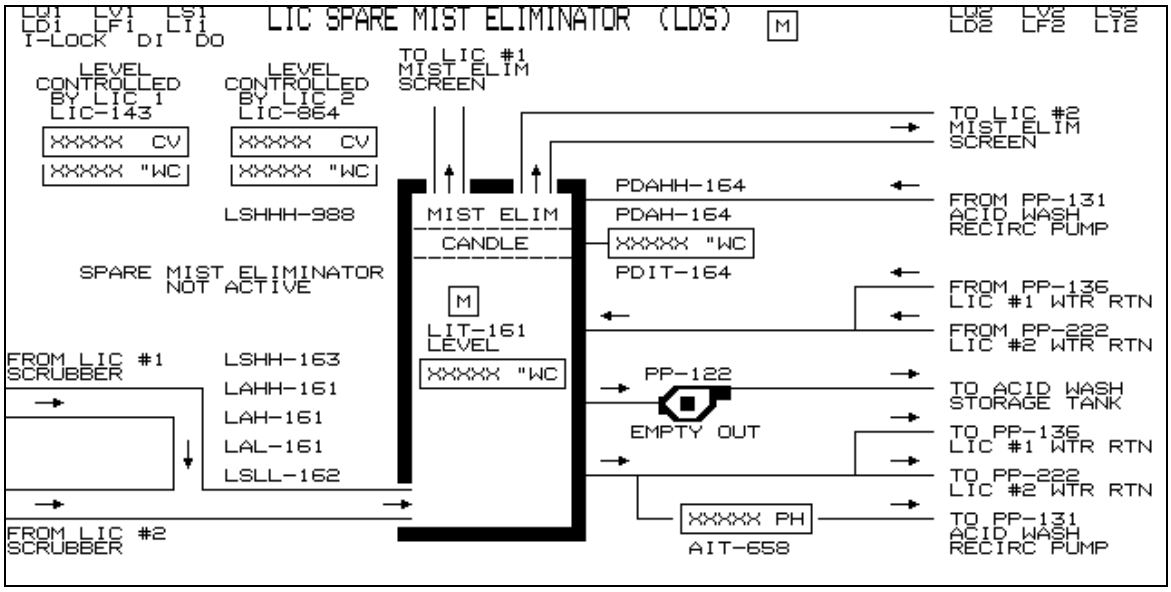

Figure E-*35*. TOCDF Advisor PC Screen LIC PAS Spare *Mist Eliminator* (LDS)

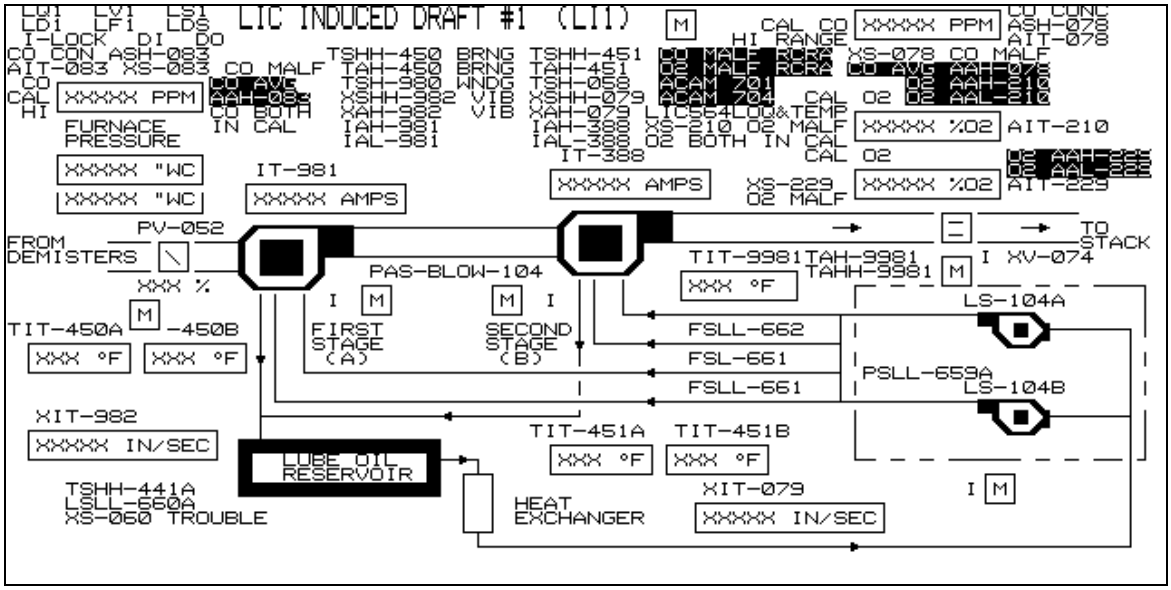

Figure E-*36*. TOCDF Advisor PC Screen LIC 1 Induced Draft (LI1)

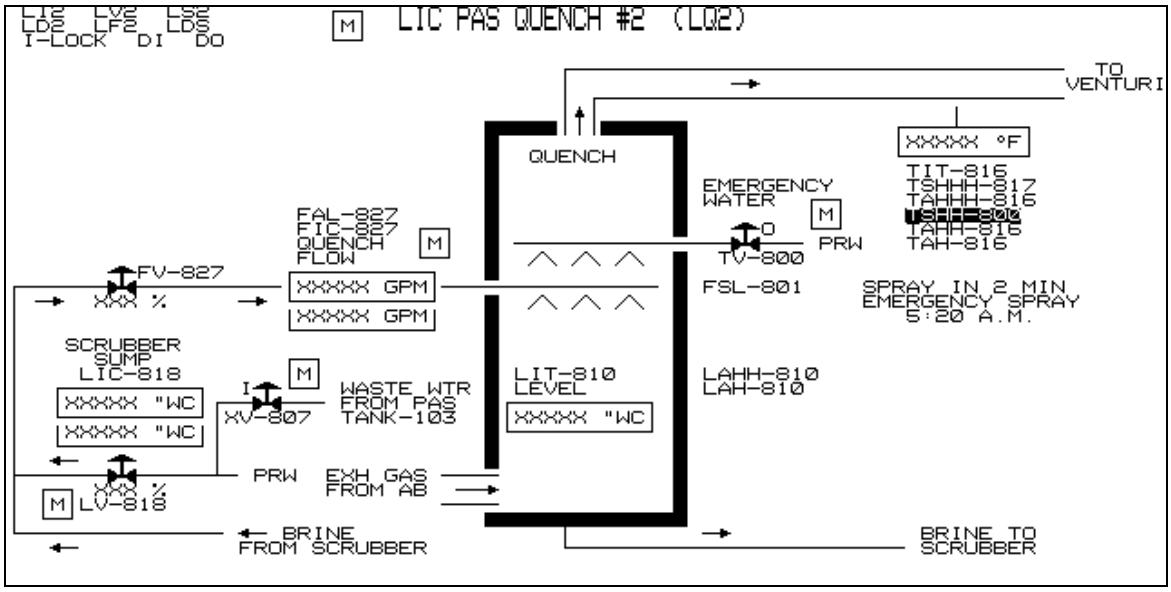

Figure E-*37*. TOCDF Advisor PC Screen LIC 2 PAS Quench (LQ2)

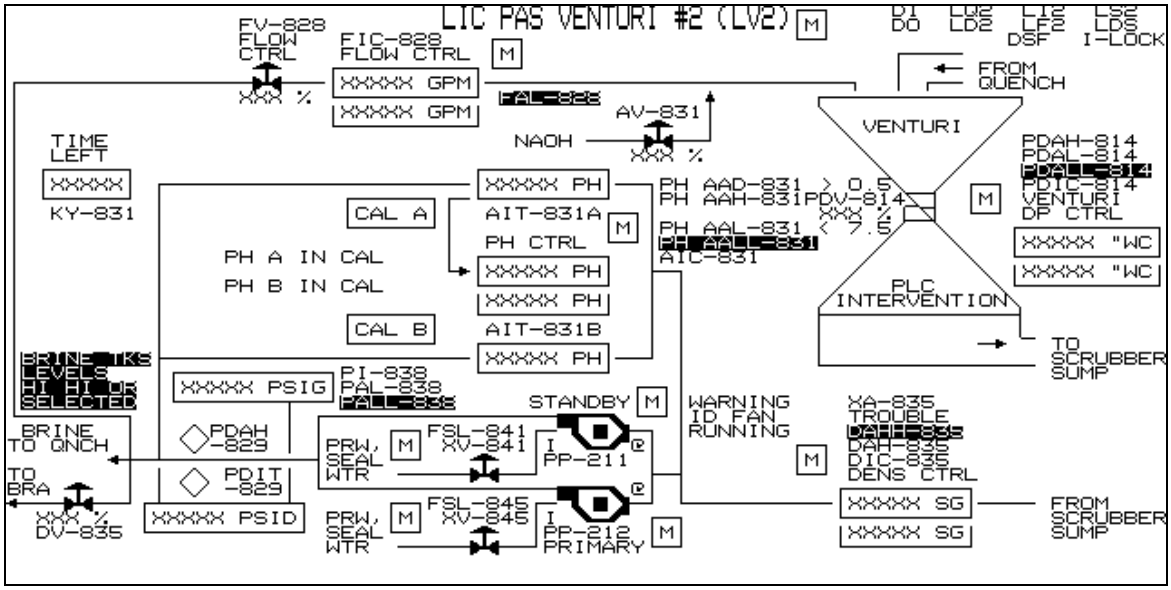

Figure E-*38*. TOCDF Advisor PC Screen LIC 2 PAS Venturi (LV2)

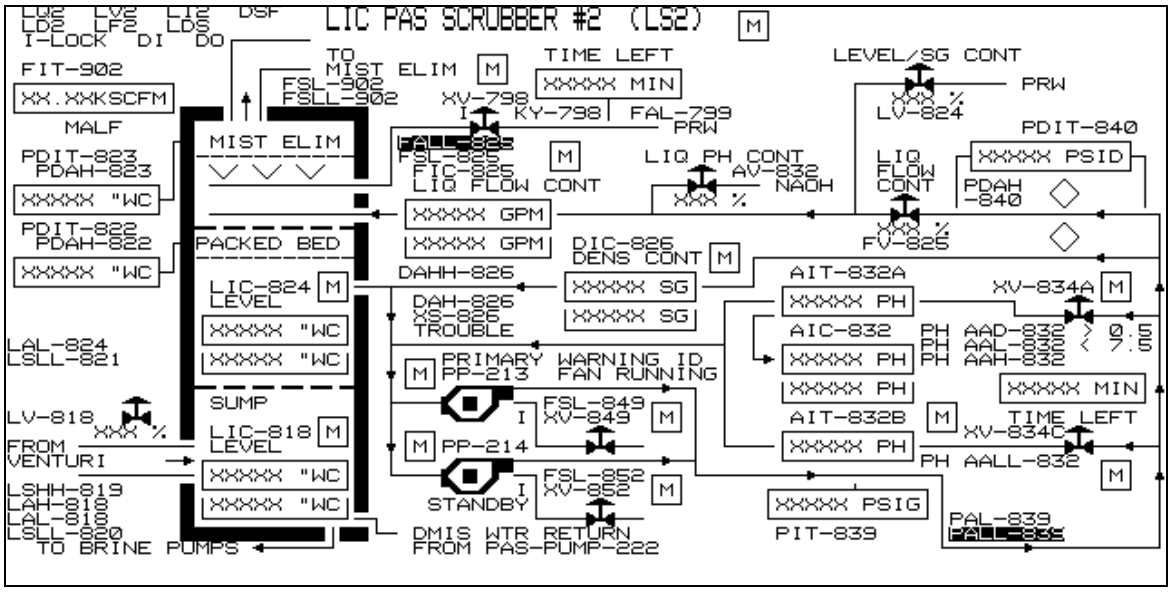

Figure E-*39*. TOCDF Advisor PC Screen LIC 2 PAS Scrubber (LS2)

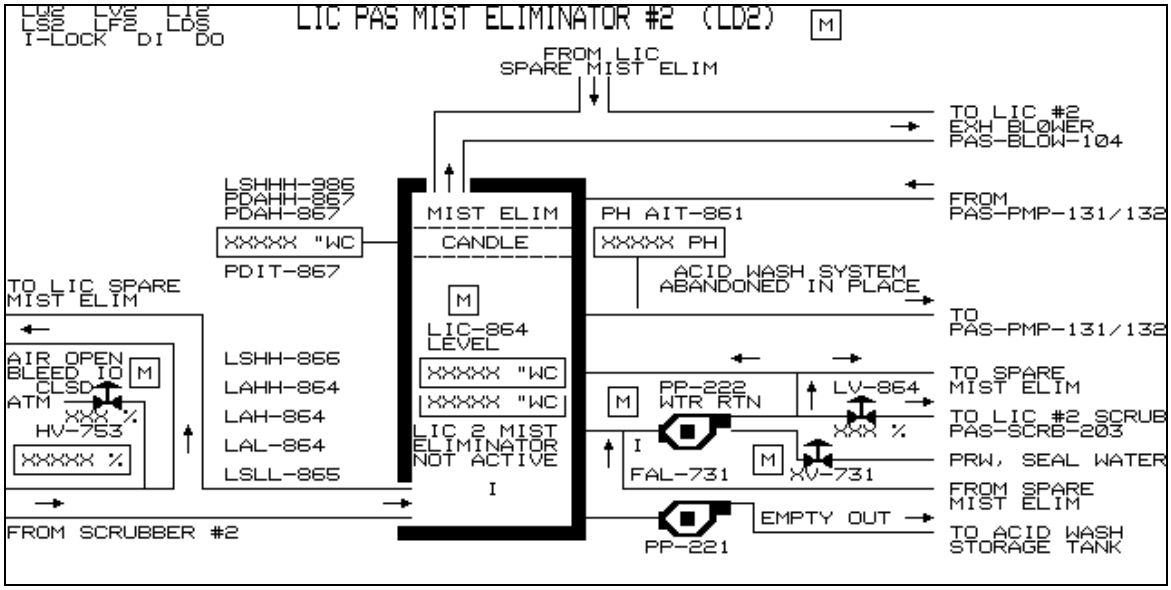

Figure E-*40*. TOCDF Advisor PC Screen LIC 2 PAS *Mist Eliminator* (LD2)

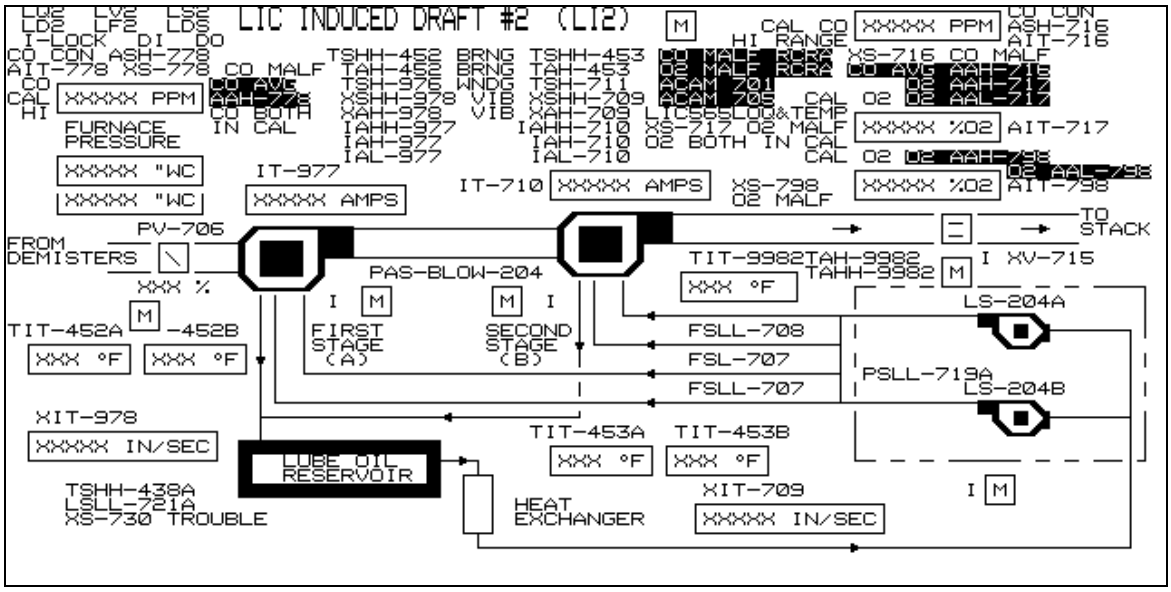

Figure E-*41*. TOCDF Advisor PC Screen LIC 2 Induced Draft (LI2)

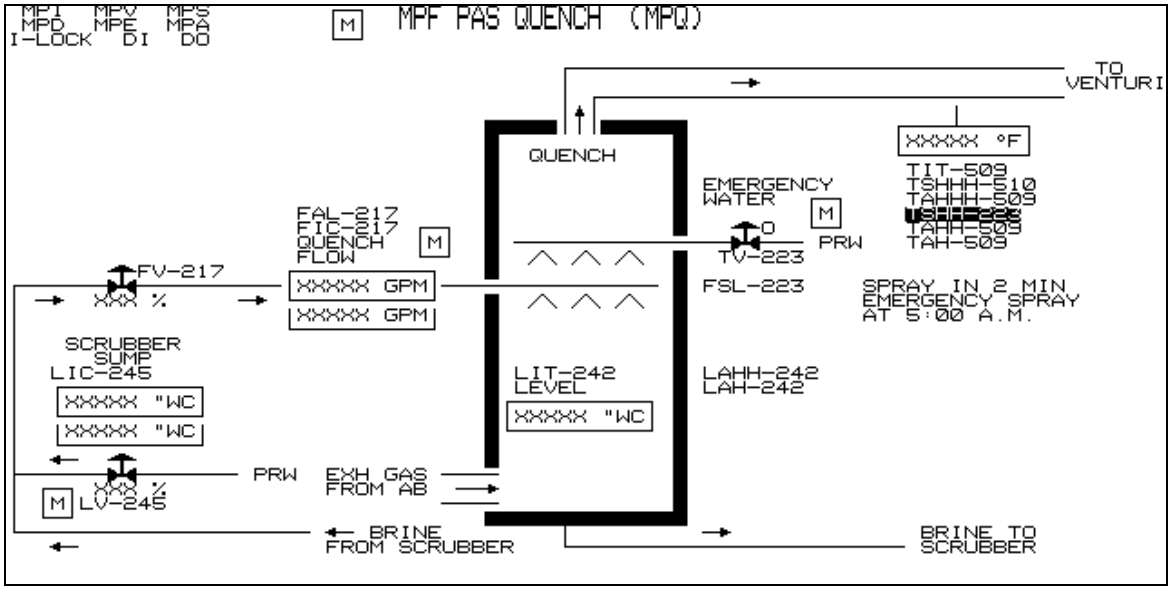

Figure E-*42*. TOCDF Advisor PC Screen MPF PAS Quench (MPQ)

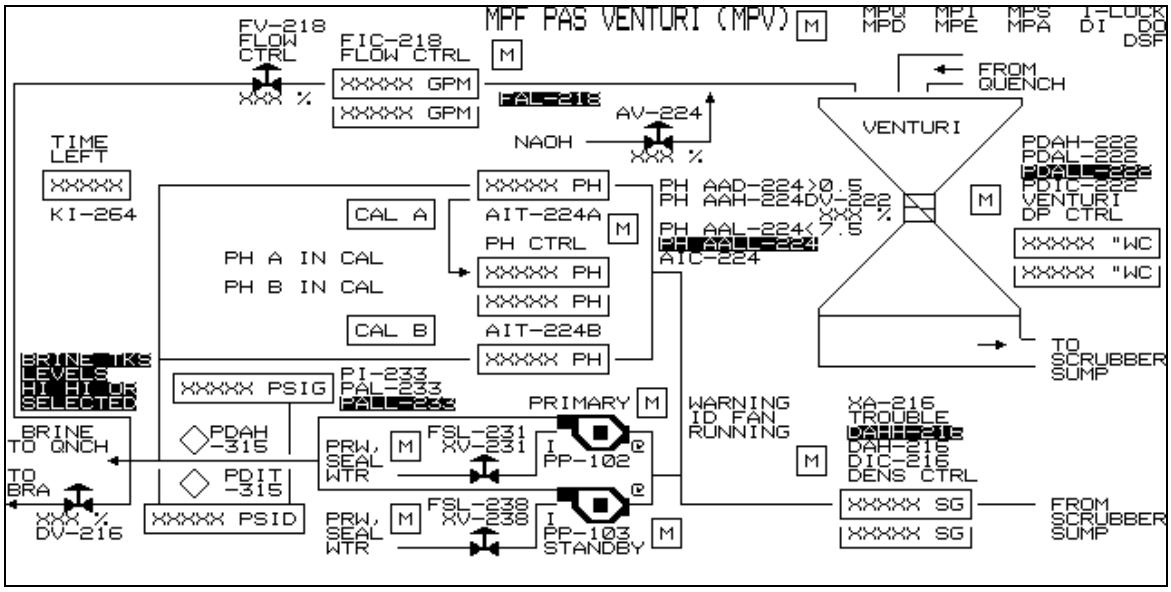

Figure E-*43*. TOCDF Advisor PC Screen MPF PAS Venturi (MPV)

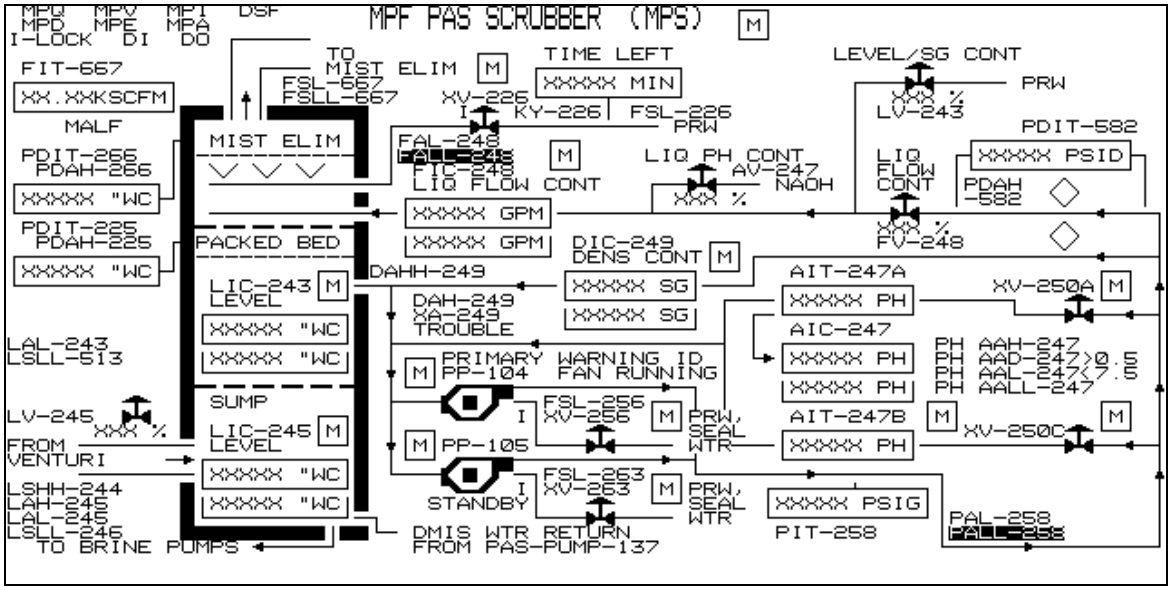

Figure E-*44*. TOCDF Advisor PC Screen MPF PAS Scrubber (MPS)

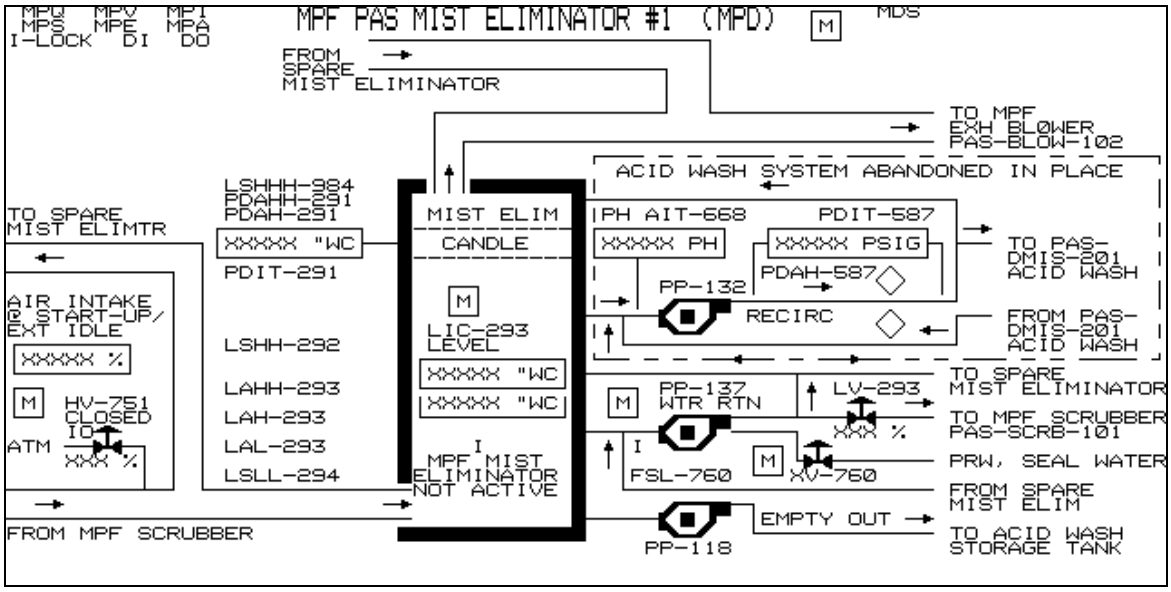

Figure E-*45*. TOCDF Advisor PC Screen MPF PAS *Mist Eliminator* (MPD)

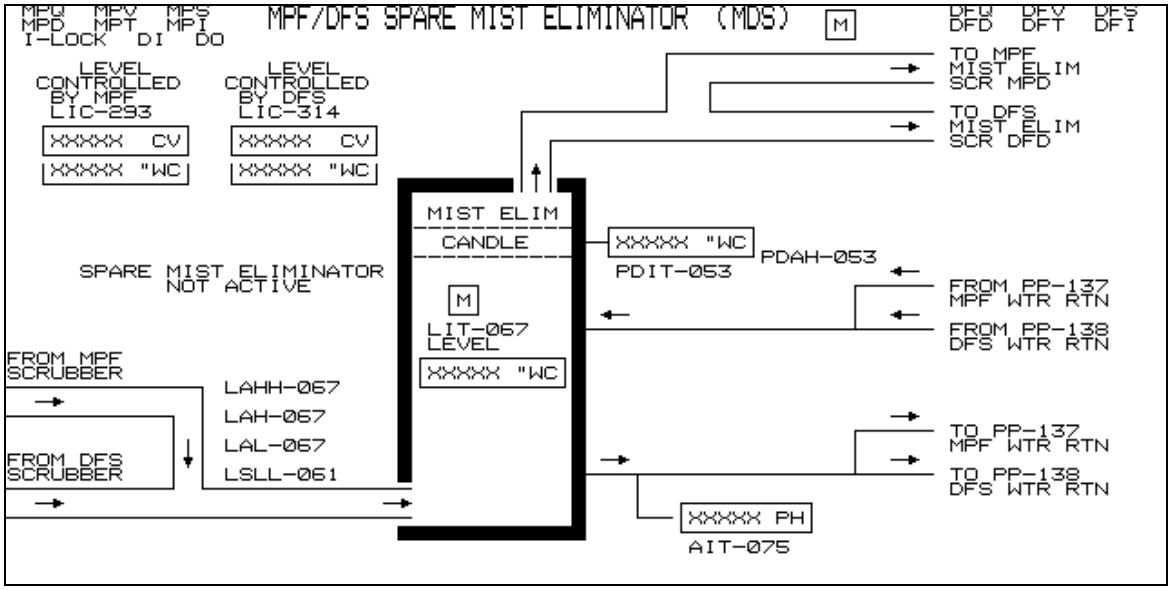

Figure E-*46*. TOCDF Advisor PC Screen MPF/DFS PAS Spare *Mist Eliminator* (MDS)

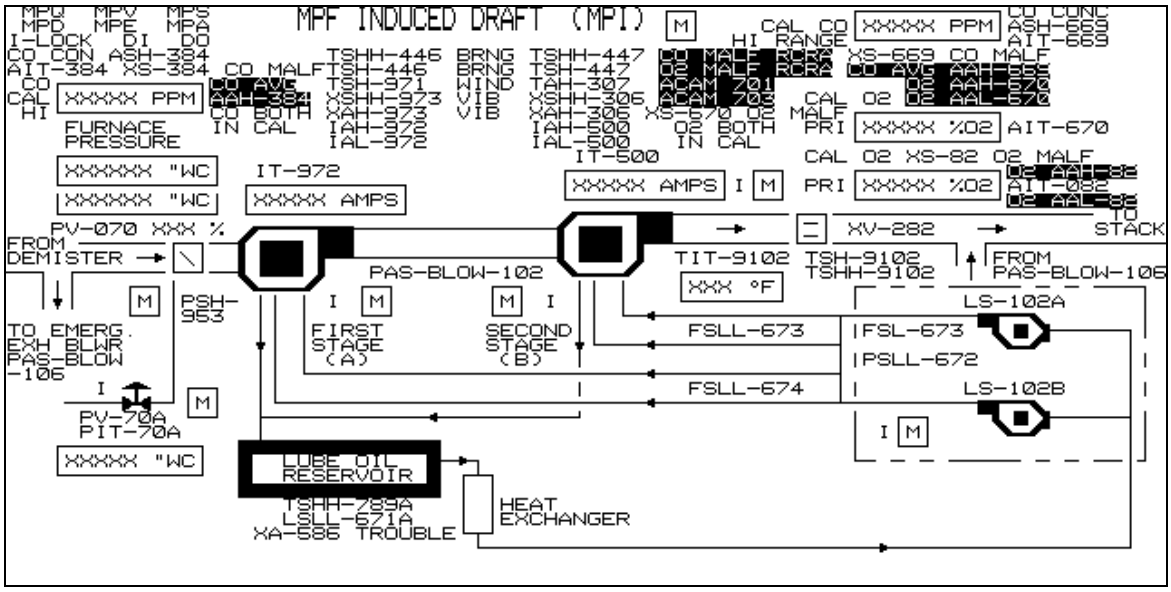

Figure E-*47*. TOCDF Advisor PC Screen MPF Induced Draft (MPI)

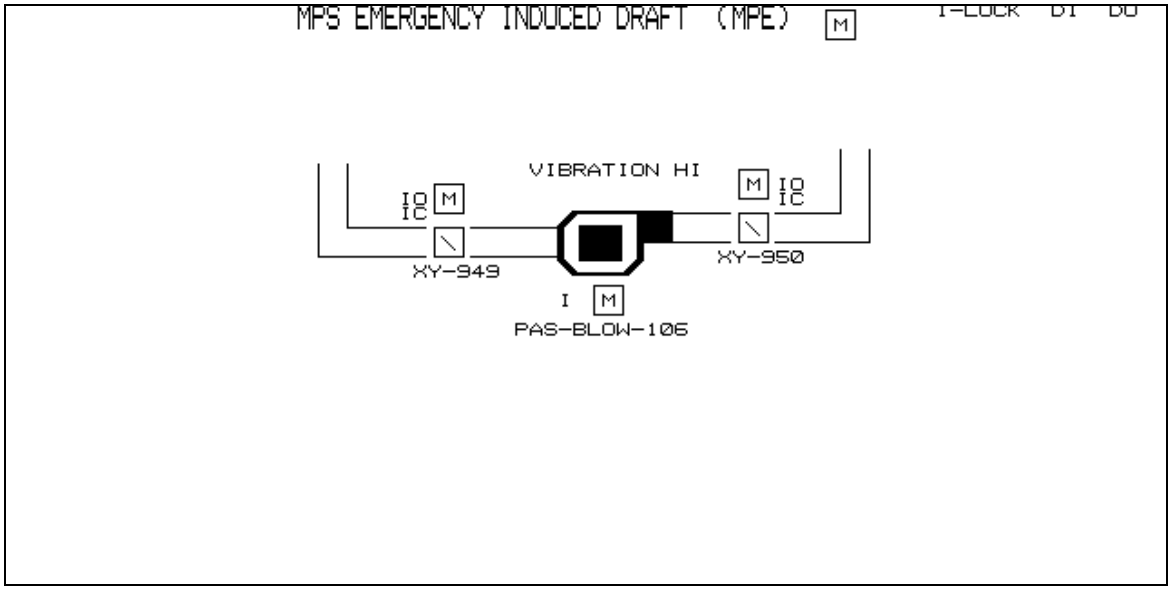

Figure E-*48*. TOCDF Advisor PC Screen MPF Emergency Induced Draft Fan (MPE)

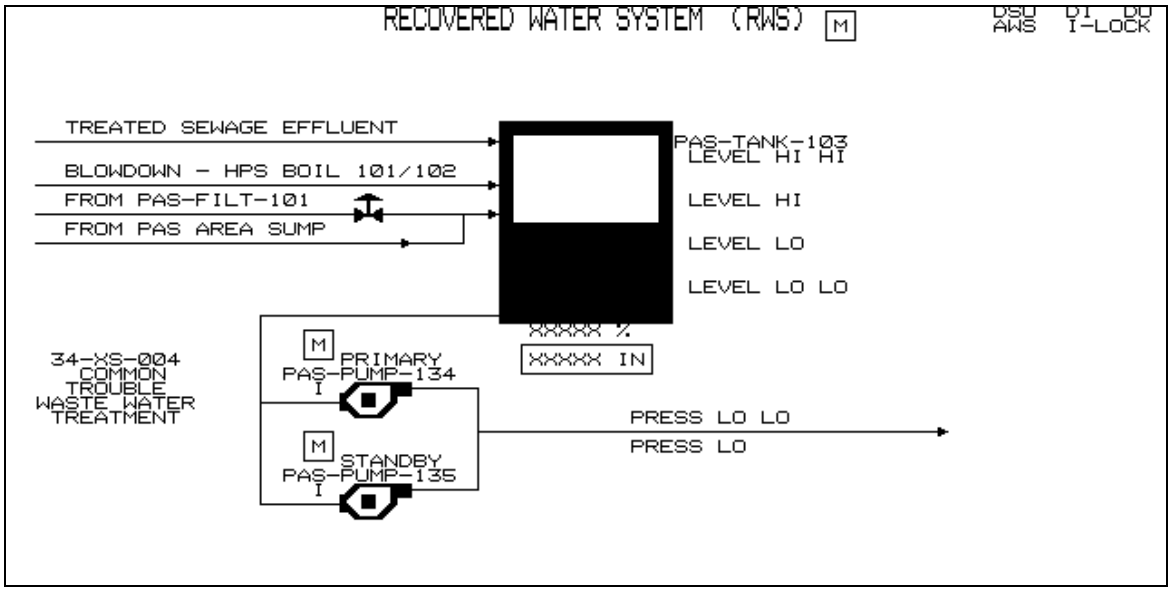

Figure E-49. TOCDF Advisor PC Screen Recovered Water System (RWS)

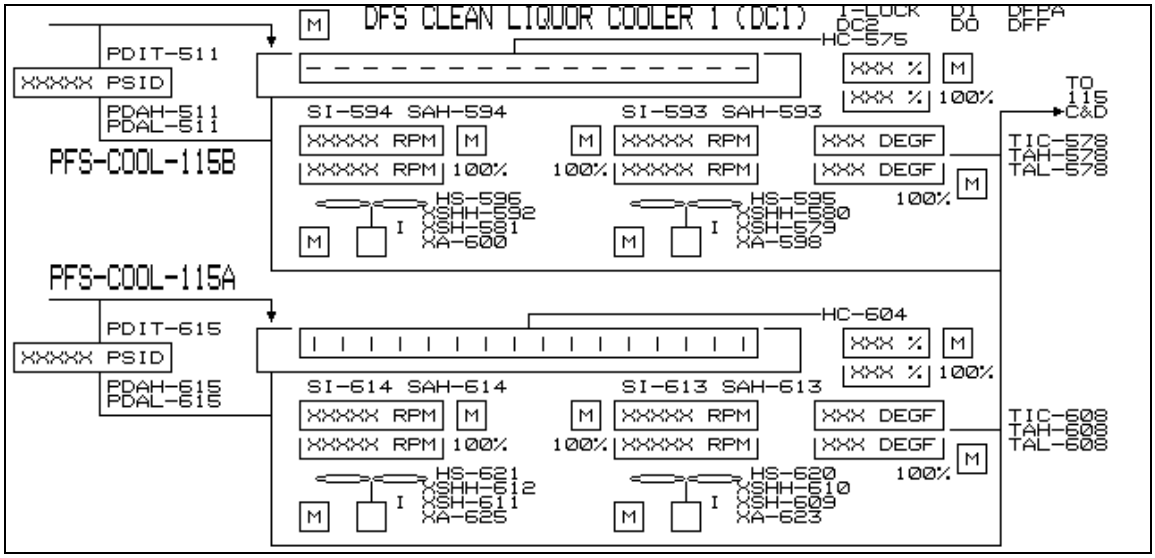

Figure E-*50*. UMCDF Advisor PC Screen DFS Clean Liquor Cooler 1 (DC1)

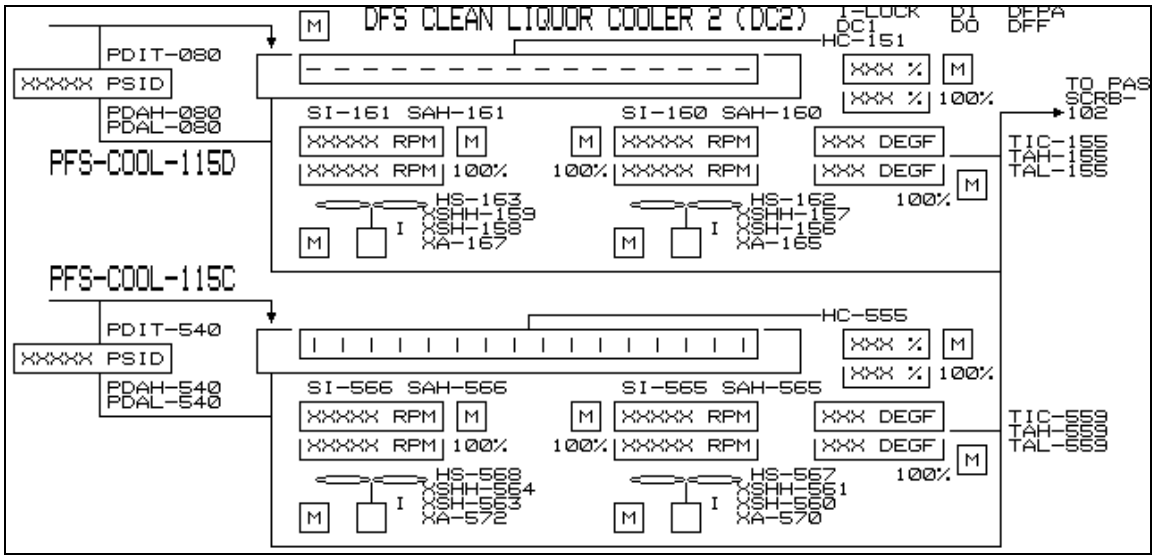

Figure E-*51*. UMCDF Advisor PC Screen DFS Clean Liquor Cooler 2 (DC2)

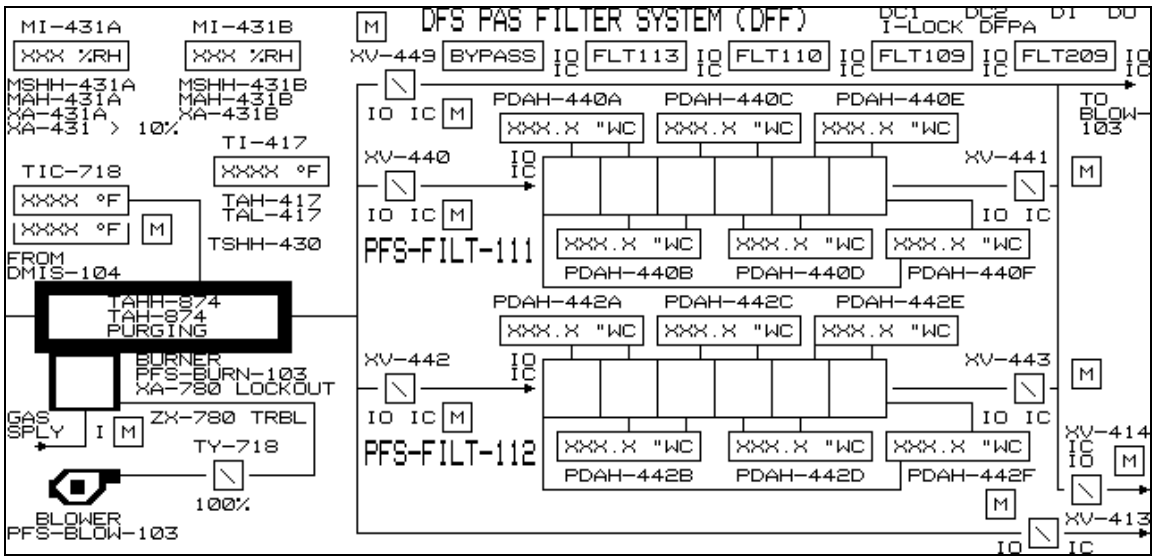

Figure E-*52*. UMCDF Advisor PC Screen DFS PAS Filter System (DFF)

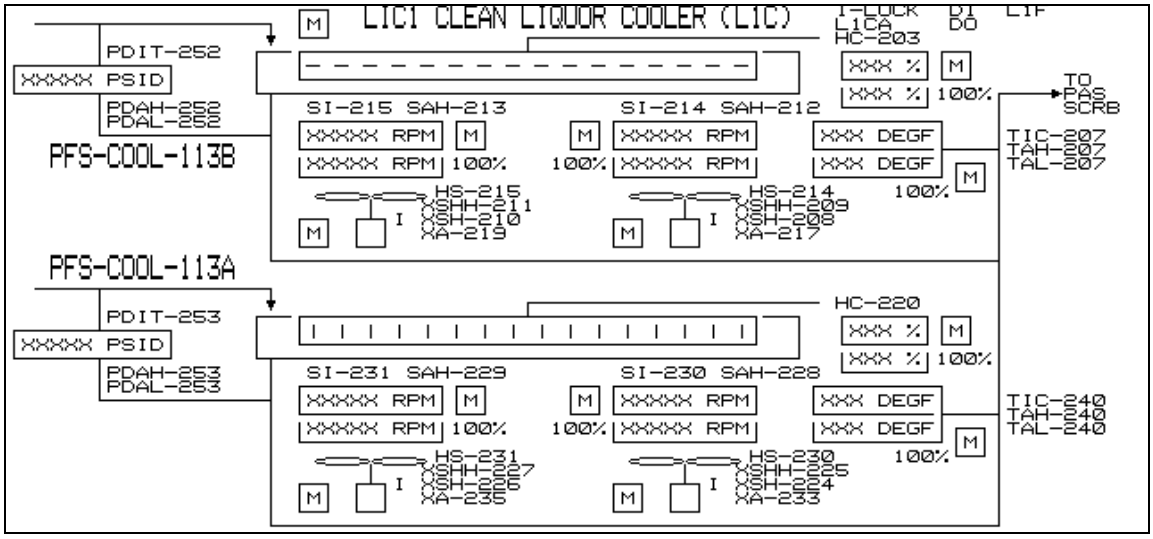

Figure E-*53*. UMCDF Advisor PC Screen LIC1 Clean Liquor Cooler (L1C)

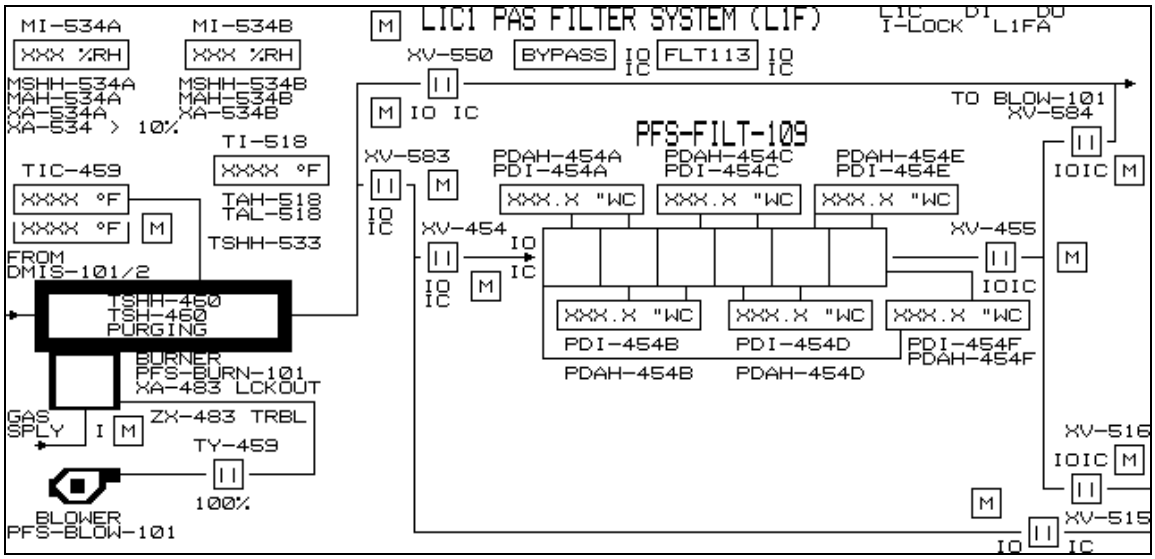

Figure E-*54*. UMCDF Advisor PC Screen LIC1 PAS Filter System (L1F)

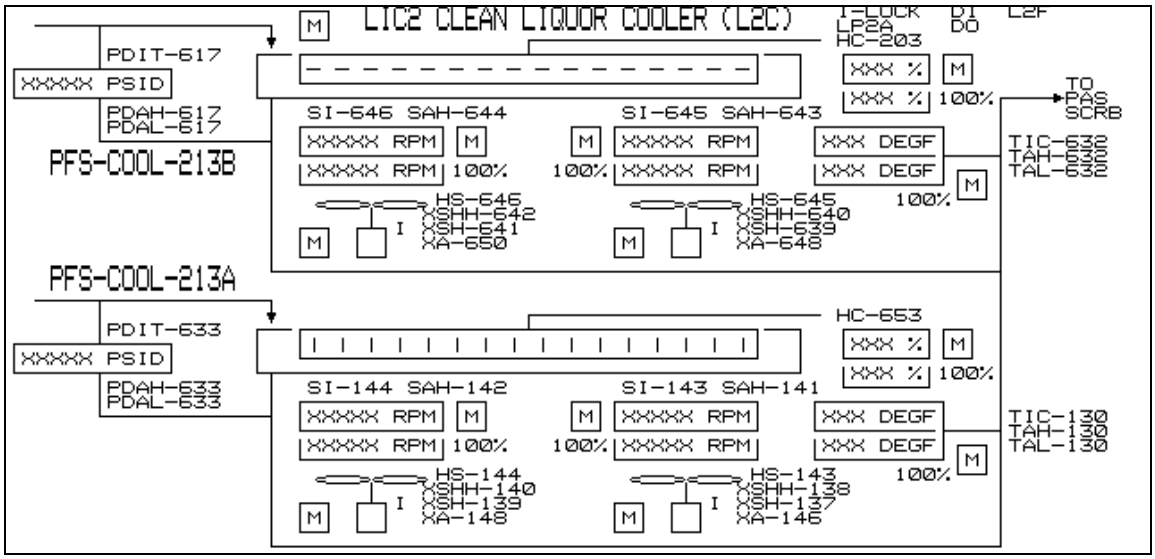

Figure E-55. UMCDF Advisor PC Screen LIC2 Clean Liquor Cooler (L2C)

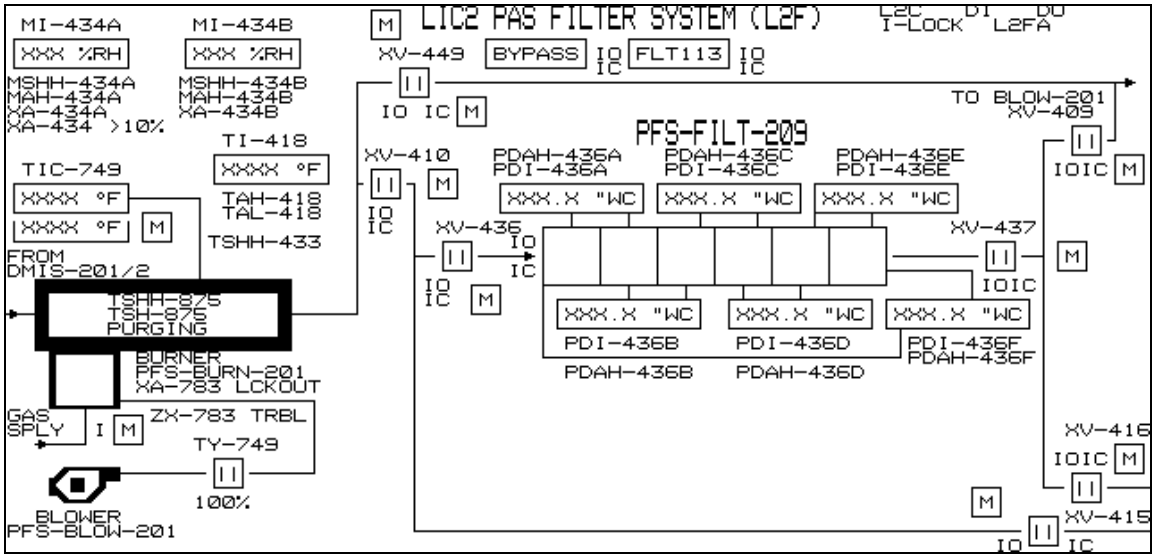

Figure E-56. UMCDF Advisor PC Screen LIC2 PAS Filter System (L2F)

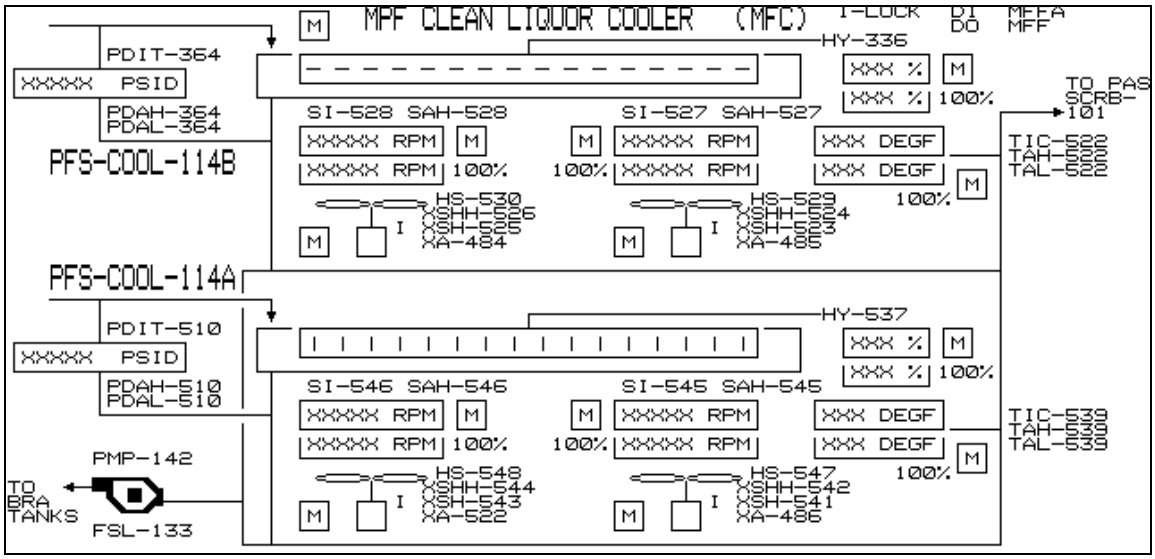

Figure E-*57*. UMCDF Advisor PC Screen MPF Clean Liquor Cooler (MFC)

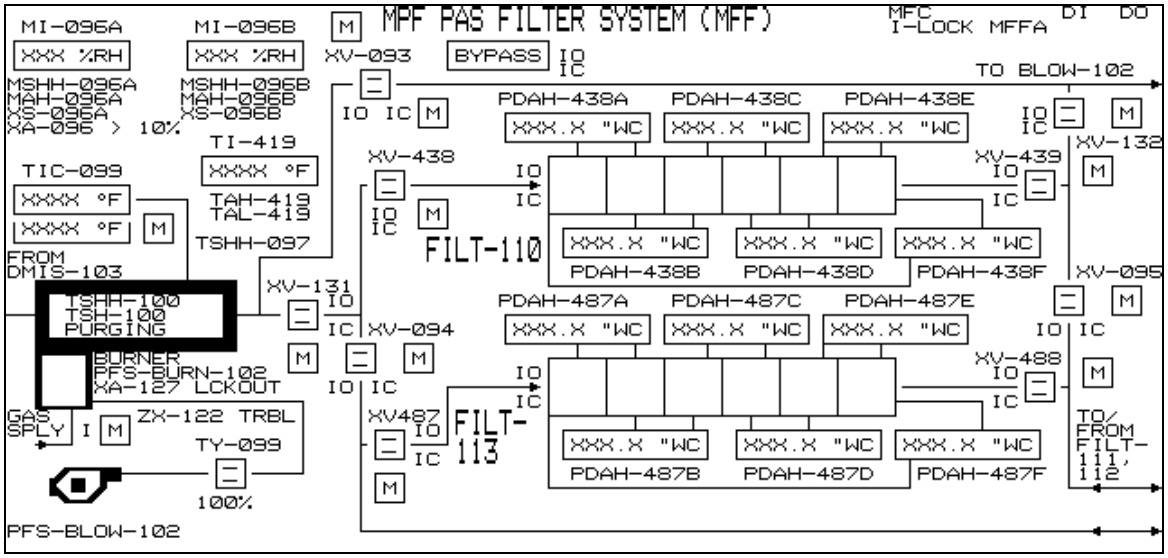

Figure E-*58*. UMCDF Advisor PC Screen MPF PAS Filter System (MFF)

APPENDIX F

Instrument Ranges

Table F.1 shows the instrument data extracted from the TOCDF Loveland calibration database for PAS instrumentation as of *August 2000*. Not all instrument tag numbers listed are part of the design at ANCDF, PBCDF, and UMCDF.

There is no instrument data in the TOCDF Loveland calibration database for PFS instrumentation since TOCDF does not have a PFS system. However, when instrument calibration databases are developed for ANCDF, PBCDF, and UMCDF, PFS instrumentation will be included in this appendix.

Table F.1 PAS Instrumentation in TOCDF Loveland Instrument Calibration Database

INSTRUMENT TAG	RCRA	INPUT			OUTPUT			SET POINT	LOOP DEFINITION
		LOW	HI	UNIT	LOW	HI	UNIT		
24-AIT-007A	Yes	0	14	pH	4	20	mA		PAS-SCRB-102 DFS Quench Brine pH Analyzer
24-AIT-007B	Yes	0	14	pH	4	20	mA		PAS-SCRB-102 DFS Quench Brine pH Analyzer
24-AIT-034A	No	0	14	pH	4	20	mA		PAS-SCRB-102 DFS Clean Liquor pH Analyzer
24-AIT-034B	No	0	14	pH	4	20	mA		PAS-SCRB-102 DFS Clean Liquor pH Analyzer
24-AIT-091A	Yes	0	14	pH	4	20	mA		PAS-SCRB-103 LIC Quench Brine pH Analyzer
24-AIT-091B	Yes	0	14	pH	4	20	mA		PAS-SCRB-103 LIC Quench Brine pH Analyzer
24-AIT-116A	No	0	14	pH	4	20	mA		PAS-SCRB-103 LIC Clean Liquor pH Analyzer
24-AIT-116B	No	0	14	pH	4	20	mA		PAS-SCRB-103 LIC Clean Liquor pH Analyzer
24-AIT-224A	Yes	0	14	pH	4	20	mA		PAS-SCRB-101 MPF Quench Brine pH Analyzer

Table F.1 (Cont'd)

INSTRUMENT TAG	RCRA	INPUT			OUTPUT			SET POINT	LOOP DEFINITION
		LOW	HI	UNIT	LOW	HI	UNIT		
24-AIT-224B	Yes	0	14	pH	4	20	mA		PAS-SCRB-101 MPF Quench Brine pH Analyzer
24-AIT-247A	No	0	14	pH	4	20	mA		PAS-SCRB-101 MPF Clean Liquor pH Analyzer
24-AIT-247B	No	0	14	pH	4	20	mA		PAS-SCRB-101 MPF Clean Liquor pH Analyzer
24-AIT-831A	Yes	0	14	pH	4	20	mA		PAS-SCRB-203 LIC 2 Scrubber Brine pH Analyzer
24-AIT-831B	Yes	0	14	pH	4	20	mA		PAS-SCRB-203 LIC 2 Scrubber Brine pH Analyzer
24-AIT-832A	No	0	14	pH	4	20	mA		PAS-SCRB-203 LIC 2 Scrubber Clean Liquor pH Analyzer
24-AIT-832B	No	0	14	pH	4	20	mA		PAS-SCRB-203 LIC 2 Scrubber Clean Liquor pH Analyzer
24-AY-007	No	4	20	mA	3	15	psig		PAS-SCRB-102 18% Caustic I/P
24-AY-034	No	4	20	mA	3	15	psig		PAS-SCRB-102 18% Caustic I/P
24-AY-091	No	4	20	mA	3	15	psig		PAS-SCRB-103 18% Caustic to Scrubber Tower
24-AY-116	No	4	20	mA	3	15	psig		PAS-SCRB-103 18% Caustic I/P
24-AY-224	No	4	20	mA	3	15	psig		PAS-SCRB-101 Scrubber Sump 18% Caustic I/P
24-AY-247	No	4	20	mA	3	15	psig		PAS-SCRB-101 18% Caustic to Scrubber Tower I/P
24-AY-831	No	4	20	mA	3	15	psig		PAS-SCRB-203 18% Caustic I/P
24-AY-832	No	4	20	mA	3	15	psig		PAS-SCRB-203 18% Caustic I/P
24-DY-033	No	4	20	mA	3	15	psig		PAS-PUMP-106/107 Brine to BRA I/P
24-DY-083	No	4	20	mA	3	15	psig		PAS-SCRB-103 Brine Density I/P

Table F.1 (Cont'd)

INSTRUMENT TAG	RCRA	INPUT			OUTPUT			SET POINT	LOOP DEFINITION
		LOW	HI	UNIT	LOW	HI	UNIT		
24-DY-216	No	4	20	mA	3	15	psig		BRA-TANK-101/102 Brine to BRA Density I/P
24-DY-835	No	4	20	mA	3	15	psig		PAS-SCRB-203 Quench Brine Pumps I/P
24-FY-002	No	4	20	mA	3	15	psig		PAS-TOWR-103 Brine I/P
24-FY-006	No	4	20	mA	3	15	psig		PAS-SEPA-102 Brine I/P
24-FY-084	No	4	20	mA	3	15	psig		PAS-TOWR-104 LIC Quench Tower Brine I/P
24-FY-088	No	4	20	mA	3	15	psig		PAS-SEPA-103 Brine Return I/P
24-FY-217	No	4	20	mA	*3*	*15*	*psig*		PAS-TOWR-102 Brine to Quench Tower I/P
24-FY-218	No	4	20	mA	*3*	*15*	*psig*		PAS-SEPA-101 Brine to Venturi Scrubber
24-FY-827	No	4	20	mA	3	15	psig		PAS-TOWR-204 LIC Quench Tower Brine I/P
24-FY-828	No	4	20	mA	3	15	psig		PAS-SEPA-203 LIC Venturi Scrubber Brine I/P
24-HY-750	No	4	20	mA	3	15	psig		PAS-DMIS-101 Extended Idle Air I/P
24-HY-751	No	4	20	mA	3	15	psig		PAS-DMIS-103 MPF Demister Vessel Extended Idle Air Intake I/P
24-HY-752	No	4	20	mA	0	100	psig		PAS-DMIS-104 Extended Idle Air
24-HY-753	No	4	20	mA	3	15	psig		PAS-DMIS-201 Startup/Idle Air IN
24-IY-079	No	4	20	mA	4	20	mA		PAS-BLOW-104B LIC1 Exhaust Blower Stage 2 Vibration
24-IY-450A	No	0	5	VDC	4	20	mA		PAS-BLOW-104A LIC1 Exhaust Blower Stage 1 Bearing Temp

Table F.1 (Cont'd)

INSTRUMENT TAG	RCRA	INPUT			OUTPUT			SET POINT	LOOP DEFINITION
		LOW	HI	UNIT	LOW	HI	UNIT		
24-IY-450B	No	0	5	VDC	4	20	mA		PAS-BLOW-104A LIC1 Exhaust Blower Stage 1 Bearing Temp
24-IY-451A	No	0	5	VDC	4	20	mA		PAS-BLOW-104B LIC1 Exhaust Blower Stage 2 Bearing Temp
24-IY-451B	No	0	5	VDC	4	20	mA		PAS-BLOW-104B LIC1 Exhaust Blower Stage 2 Bearing Temp
24-IY-452A	No	0	5	VDC	4	20	mA		PAS-BLOW-204A LIC2 Exhaust Blower Stage 1 Bearing Temp
24-IY-452B	No	0	5	VDC	4	20	mA		PAS-BLOW-204A LIC2 Exhaust Blower Stage 1 Bearing Temp
24-IY-453A	No	0	5	VDC	4	20	mA		PAS-BLOW-204B LIC2 Exhaust Blower Stage 2 Bearing Temp
24-IY-453B	No	0	5	VDC	4	20	mA		PAS-BLOW-204B LIC2 Exhaust Blower Stage 2 Bearing Temp
24-IY-709	No	4	20	mA	4	20	mA		PAS-BLOW-204B LIC2 Exhaust Blower Stage 2 Vibration
24-IY-978	No	4	20	mA	4	20	mA		PAS-BLOW-204A LIC2 Exhaust Blower Stage 1 Vibration
24-IY-982	No	4	20	mA	4	20	mA		PAS-BLOW-104A LIC1 Exhaust Blower Stage 1 Vibration
24-LIT-009	No	0	6	in. wc.	4	20	mA		PAS-TOWR-103 DFS Quench Tower
24-LIT-010	No	0	104	in. wc.	4	20	mA		PAS-SCRB-102 DFS Scrubber Tower
24-LIT-031	No	0	114	in. wc.	4	20	mA		PAS-SCRB-102 DFS Scrubber Tower Transmitter

Table F.1 (Cont'd)

INSTRUMENT TAG	RCRA	INPUT			OUTPUT			SET POINT	LOOP DEFINITION
		LOW	HI	UNIT	LOW	HI	UNIT		
24-LIT-067	No	0	76	in. wc.	4	20	mA		PAS-DMIS-105 MPF/DFS Demister
24-LIT-113	No	0	114	in. wc.	4	20	mA		PAS-SCRB-103 LIC Scrubber Tower
24-LIT-115	No	0	104	in. wc.	4	20	mA		PAS-SCRB-103 LIC Scrub Tower Sump
24-LIT-132	No	0	6	in. wc.	4	20	mA		PAS-TOWR-104 LIC Quench Tower
24-LIT-143	No	0	63.5	in. wc.	4	20	mA		PAS-DMIS-101 LIC-1 Demister
24-LIT-161	No	0	64	in. wc.	4	20	mA		PAS-DMIS-102 LIC Demister Vessel (Spare)
24-LIT-242	No	0	6	in. wc.	4	20	mA		PAS-TOWR-102 MPF Quench Tower
24-LIT-243	No	0	114	in. wc.	4	20	mA		PAS-SCRB-101 MPF Scrub Tower Tray Level
24-LIT-245	No	0	104	in. wc.	4	20	mA		PAS-SCBR-101 MPF Scrub Tower Sump Level
24-LIT-293	No	0	76	in. wc.	4	20	mA		PAS-DMIS-103 MPF Demister
24-LIT-314	No	0	76	in. wc.	4	20	mA		PAS-DMIS-104 DFS Demister
24-LIT-810	No	0	6	in. wc.	4	20	mA		PAS-TOWR-204 LIC 2 Quench Tower
24-LIT-818	No	0	104	in. wc.	4	20	mA		PAS-SCRB-203 LIC 2 Scrubber Tower Sump
24-LIT-824	No	0	114	in. wc.	4	20	mA		PAS-SCRB-203 LIC 2 Scrubber Tower
24-LIT-864	No	0	63.5	in. wc.	4	20	mA		PAS-DMIS-201 LIC-2 Demister
24-LIT-920	No	0	156	in. wc.	4	20	mA		PAS-TANK-103 Recovered Water Tank
24-LY-010	No	4	20	mA	3	15	psig		PAS-TOWR-103 Process Water
24-LY-067	No	4	20	mA	4	20	mA		PAS-DMIS-104 DFS Demister I/I
24-LY-115	No	4	20	mA	3	15	psig		PAS-TOWR-104 Process Water
24-LY-245	No	4	20	mA	0	100	%		PAS-TOWR-102 Process Water to Quench Tower

Table F.1 (Cont'd)

INSTRUMENT TAG	RCRA	INPUT			OUTPUT			SET POINT	LOOP DEFINITION
		LOW	HI	UNIT	LOW	HI	UNIT		
24-LY-775	No	4	20	mA	4	20	mA		PAS-DMIS-102 Spare Demister Pump
24-LY-818	No	4	20	mA	3	15	psig		PAS-SCRB-203 LIC 2 Venturi Scrubber I/P
24-PDIT-003	No	0	5	in. wc.	4	20	mA		PAS-SCRB-102 DFS Scrubber Tower Mist Eliminator Pad
24-PDIT-007	No	0	15	psig	4	20	mA		PAS-SEPA-102 Quench Brine Filter
24-PDIT-008	Yes	0	50	in. wc.	4	20	mA		PAS-SEPA-102 Venturi Scrubber
24-PDIT-025	No	0	10	in. wc.	4	20	mA		PAS-SCRB-102 DFS Scrubber Tower Packed Bed
24-PDIT-051	No	0	15	psi	4	20	mA		PAS-TOWR-103 Brine Filter
24-PDIT-053	No	0	30	in. wc.	4	20	mA		PAS-DMIS-105 MPF/DFS Demister
24-PDIT-082	No	0	5	in. wc.	4	20	mA		PAS-SCRB-103 LIC 1 Scrubber Tower Mist Eliminator Pad
24-PDIT-089	No	0	15	psig	4	20	mA		PAS-SEPA-103 Quench Brine Filter
24-PDIT-090	Yes	0	50	in. wc.	4	20	mA		PAS-SEPA-103 LIC Venturi Scrubber
24-PDIT-108	No	0	10	in. wc.	4	20	mA		PAS-SCRB-103 LIC 1 Scrubber Tower Packed Bed
24-PDIT-147	No	0	30	in. wc.	4	20	mA		PAS-DMIS-101 LIC-1 Demister
24-PDIT-164	No	0	30	in. wc.	4	20	mA		PAS-DMIS-102 LIC-1 Demister
24-PDIT-222	Yes	0	50	in. wc.	4	20	mA		PAS-SEPA-101 MPF Venturi Scrubber Diff Pressure
24-PDIT-225	No	0	10	in. wc.	4	20	mA		PAS-SCRB-101 MPF Scrubber Tower Packed Bed
24-PDIT-266	No	0	5	in. wc.	4	20	mA		PAS-SCRB-101 MPF Scrubber Tower Mist Eliminator Pad

Table F.1 (Cont'd)

INSTRUMENT TAG	RCRA	INPUT			OUTPUT			SET POINT	LOOP DEFINITION
		LOW	HI	UNIT	LOW	HI	UNIT		
24-PDIT-291	No	0	30	in. wc.	4	20	mA		PAS-DMIS-103 MPF Demister Vessel Diff Press Transmitter
24-PDIT-312	No	0	30	in. wc.	4	20	mA		PAS-DMIS-104 DFS Demister
24-PDIT-315	No	0	15	psi	4	20	mA		PAS-SEPA-101 Brine Filter
24-PDIT-582	No	0	15	psig	4	20	mA		PAS-SCRB-101 MPF Scrubber Tower Clean Liquor Filter
24-PDIT-583	No	0	15	psig	4	20	mA		PAS-SCRB-103 LIC 1 Scrubber Tower Clean Liquor Filter
24-PDIT-655	No	0	15	psi	4	20	mA		PAS-SCRB-102 DFS Scrubber Tower Clean Liquor Filter
24-PDIT-814	Yes	0	50	in. wc.	4	20	mA		PAS-SEPA-203 Venturi Scrub
24-PDIT-822	No	0	10	in. wc.	4	20	mA		PAS-SCRB-203 LIC 2 Scrubber Tower Packed Bed
24-PDIT-823	No	0	5	in. wc.	4	20	mA		PAS-SCRB-203 LIC 2 Scrubber Tower Mist Eliminator Pad
24-PDIT-829	No	0	15	psi	4	20	mA		PAS-SEPA-203 Quench Brine Filter
24-PDIT-840	No	0	15	psi	4	20	mA		PAS-SCRB-203 LIC 2 Scrubber Tower Clean Liquor Filter
24-PDIT-867	No	0	30	in. wc.	4	20	mA		PAS-DMIS-201 LIC-2 Demister Vessel
24-PDSH-462	No	0	30	psig	0	0		15	PAS-BLOW-103 DFS Exhaust Blower Lube Oil Filter ΔP
24-PDSH-463	No	0	30	psig	0	0		15	PAS-BLOW-102 MPF Exhaust Blower Lube Oil Filter ΔP
24-PDSH-464	No	0	30	psig	0	0		15	PAS-BLOW-104 LIC1 Exhaust Blower Lube Oil Filter ΔP

Table F.1 (Cont'd)

INSTRUMENT TAG	RCRA	INPUT			OUTPUT			SET POINT	LOOP DEFINITION
		LOW	HI	UNIT	LOW	HI	UNIT		
24-PDSH-465	No	0	30	psig	0	0		15	PAS-BLOW-204 LIC2 Exhaust Blower Lube Oil Filter ΔP
24-PDSH-466	No	0	30	psig	0	0		15	PAS-BLOW-102 MPF Exhaust Blower Lube Oil Filter ΔP
24-PDSH-467	No	0	30	psig	0	0		15	PAS-BLOW-103 DFS Exhaust Blower Lube Oil Filter ΔP
24-PDSH-468	No	0	30	psig	0	0		15	PAS-BLOW-104 LIC1 Exhaust Blower Lube Oil Filter ΔP
24-PDSH-469	No	0	30	psig	0	0		15	PAS-BLOW-204 LIC2 Exhaust Blower Lube Oil Filter ΔP
24-PDY-008	No	4	20	mA	3	15	psig		PAS-SEPA-102 DFS Venturi Scrubber I/P
24-PDY-090	No	4	20	mA	3	*15*	psig		PAS-SEPA-103 LIC Venturi Scrubber I/P
24-PDY-222	No	4	20	mA	3	15	psig		PAS-SEPA-101 MPF Venturi Scrubber I/P
24-PDY-814	No	4	20	mA	3	15	psig		PAS-SEPA-203 LIC 2 Venturi Tower I/P
24-PIT-011	Yes	0	200	psig	4	20	mA		PAS-TOWR-103 Quench Brine
24-PIT-036	Yes	0	100	psig	4	20	mA		PAS-PUMP-108/109 Discharge
24-PIT-100	Yes	0	150	psig	4	20	mA		PAS-PUMP-111/112 Quench Brine Pumps Discharge
24-PIT-129	Yes	0	100	psig	4	20	mA		PAS-PUMP-113/114 Clean Liquor Pumps Discharge
24-PIT-233	Yes	0	200	psig	4	20	mA		PAS-PUMP-102/103 Quench Brine Pumps Discharge
24-PIT-258	Yes	0	100	psig	4	20	mA		PAS-SCRB-101 Clean Liquor
24-PIT-838	Yes	0	150	psig	4	20	mA		PAS-TOWR-204 Quench Brine

Table F.1 (Cont'd)

INSTRUMENT TAG	RCRA	INPUT			OUTPUT			SET POINT	LOOP DEFINITION
		LOW	HI	UNIT	LOW	HI	UNIT		
24-PIT-839	Yes	0	100	psig	4	20	mA		PAS-SCRB-203 Clean Liquor
24-PIT-9913	No	11	14	psiA	4	20	mA		PAS-STAK-102 Common Stack Pressure
24-PSH-953	No	-30	30	in Hg	0	0		*-13*	PAS-BLOW-102 MPF Exhaust Blower Pressure High
24-PSH-959	No	-15	15	in. wc.	0	0		-9	PAS-BLOW-103 DFS Exhaust Blower
24-PSL-439	No	1.5	75	psig	0	0		25	PAS-BLOW-204 LIC2 Exhaust Blower Lube Oil Supply
24-PSL-442	No	1.5	75	psig	0	0		25	PAS-BLOW-104 LIC1 Exhaust Blower Lube Oil Supply
24-PSL-790	No	1.5	75	psig	0	0		25	PAS-BLOW-102 MPF Exhaust Blower Lube Oil Supply
24-PSL-793	No	1.5	75	psig	0	0		25	PAS-BLOW-103 DFS Exhaust Blower Lube Oil Supply
24-PSL-919	No	0	200	psig	0	0		85	PAS-PUMP-134/135 Recovered Water Feed Pump
24-PSLL-659	No	1.5	75	psig	0	0		15	PAS-BLOW-104 LIC1 Exhaust Blower Lube Oil Supply
24-PSLL-672	No	1.5	75	psig	0	0		15	PAS-BLOW-102 MPF Exhaust Blower Lube Oil Supply
24-PSLL-719	No	1.5	75	psig	0	0		15	PAS-BLOW-204 LIC2 Exhaust Blower Lube Oil Supply
24-PSLL-793	No	1.5	75	psig	0	0		15	PAS-BLOW-103 DFS Exhaust Blower Lube Oil Supply

Table F.1 (Cont'd)

INSTRUMENT TAG	RCRA	INPUT			OUTPUT			SET POINT	LOOP DEFINITION
		LOW	HI	UNIT	LOW	HI	UNIT		
24-PSLL-913	No	0	200	psi	0	0		70	PAS-PUMP-134/135 Recovered Water Feed Pump
24-TIT-374	Yes	0	300	°F	4	20	mA		PAS-TOWR-103 Quench Tower Overhead to PAS-SEPA-102
24-TIT-397	Yes	0	300	°F	4	20	mA		PAS-TOWR-104 Quench Tower Outlet
24-TIT-509	Yes	0	300	°F	4	20	mA		PAS-TOWR-102 Quench Tower Outlet Venturi Scrubber 101
24-TIT-816	Yes	0	300	°F	4	20	mA		PAS-TOWR-204 Overhead to Venturi Scrubber
24-TIT-9102	No	0	400	°F	4	20	mA		PAS-BLOW-102 MPF Exhaust Blower Discharge
24-TIT-9103	No	0	400	°F	4	20	mA		PAS-BLOW-103 DFS Exhaust Blower Discharge
24-TIT-9913	No	0	350	°F	4	20	mA		PAS-STAK-102 Common Stack Temperature
24-TIT-9981	No	0	400	°F	4	20	mA		PAS-BLOW-104 LIC1 Exhaust Blower Discharge
24-TIT-9982	No	0	400	°F	4	20	mA		PAS-BLOW-204 LIC2 Exhaust Blower Discharge
24-TS-483	No	75	205	°F	0	0		115	PAS-BLOW-102 MPF Exhaust Blower Lube Oil Supply
24-TS-485	No	75	205	°F	0	0		115	PAS-BLOW-103 DFS Exhaust Blower Lube Oil Supply
24-TS-487	No	75	205	°F	0	0		115	PAS-BLOW-104 LIC1 Exhaust Blower Lube Oil Supply
24-TS-489	No	75	205	°F	0	0		115	PAS-BLOW-204 LIC2 Exhaust Blower Lube Oil Supply

Table F.1 (Cont'd)

INSTRUMENT TAG	RCRA	INPUT			OUTPUT			SET POINT	LOOP DEFINITION
		LOW	HI	UNIT	LOW	HI	UNIT		
24-TSH-454	No	75	205	°F	0	0		*100*	PAS-BLOW-102 MPF Exhaust Blower Lube Oil Reservoir
24-TSH-455	No	75	205	°F	0	0		*100*	PAS-BLOW-103 DFS Exhaust Blower Lube Oil Reservoir
24-TSH-456	No	75	205	°F	0	0		*100*	PAS-BLOW-104 LIC1 Exhaust Blower Lube Oil Reservoir
24-TSH-457	No	75	205	°F	0	0		*100*	PAS-BLOW-204 LIC2 Exhaust Blower Lube Oil Reservoir
24-TSH-482	No	75	205	°F	0	0		*122.5*	PAS-BLOW-102 MPF Exhaust Blower Lube Oil Supply
24-TSH-484	No	75	205	°F	0	0		*122.5*	PAS-BLOW-103 DFS Exhaust Blower Lube Oil Supply
24-TSH-486	No	75	205	°F	0	0		*122.5*	PAS-BLOW-104 LIC1 Exhaust Blower Lube Oil Supply
24-TSH-488	No	75	205	°F	0	0		*122.5*	PAS-BLOW-204 LIC2 Exhaust Blower Lube Oil Supply
24-TSHH-001	Yes	175	360	°F	0	0		*200*	PAS-TOWR-103 Gas from Quench Tower to Venturi Scrubber
24-TSHH-089	Yes	175	360	°F	0	0		225	PAS-TOWR-104 Gas from Quench Tower to Venturi Scrubber
24-TSHH-223	Yes	175	360	°F	0	0		225	PAS-TOWR-102 Quench Tower Exhaust
24-TSHH-438	No	75	205	°F	0	0		130	PAS-BLOW-204 LIC2 Exhaust Blower Lube Oil Supply

Table F.1 (Cont'd)

INSTRUMENT TAG	RCRA	INPUT			OUTPUT			SET POINT	LOOP DEFINITION
		LOW	HI	UNIT	LOW	HI	UNIT		
24-TSHH-441	No	75	205	°F	0	0		130	PAS-BLOW-104 LIC1 Exhaust Blower Lube Oil Supply
24-TSHH-789	No	75	205	°F	0	0		130	PAS-BLOW-102 MPF Exhaust Blower Lube Oil Supply
24-TSHH-792	No	75	205	°F	0	0		130	PAS-BLOW-103 DFS Exhaust Blower Lube Oil Supply
24-TSHH-800	Yes	175	360	°F	0	0		225	PAS-TOWR-204 Exhaust to Venturi Scrubber
24-TSHHH-375	No	170	345	°F	0	0		250	PAS-TOWR-103 Quench Tower Overhead to PAS-SEPA-102
24-TSHHH-396	No	170	345	°F	0	0		250	PAS-TOWR-104 Quench Tower Outlet Gas
24-TSHHH-510	No	175	345	°F	0	0		250	PAS-TOWR-102 Quench Tower Overhead Venturi Scrubber
24-TSHHH-817	No	175	345	°F	0	0		250	PAS-TOWR-204 LIC 2 Quench Tower

NOTE: The following instruments are no longer in the TOCDF Loveland Instrument Calibration Database and were deleted from Table F.1: 24-AIT-075, -540, -589, -657, -658, -668, -861, 24-FY-360, -361, 589, -619, 878, 24-LIT-332, -907, 24-PDIT-111, -265, -587, -618, -808, and 24-TSL-142.

APPENDIX G

Intercontroller Communications

At all sites, the PAS components are controlled by the same PLC as its associated furnace. At TOCDF, DFS PAS operations are controlled by ICS-CONR-112 and MPF PAS operations are controlled by ICS-CONR-113. The same PLCs will control the DFS PAS and MPF PAS at the future sites.

At TOCDF, LIC #1 PAS operations are controlled by ICS-CONR-114 and LIC #2 PAS operations are controlled ICS-CONR-119. Control for the two LIC furnaces and associated PASs at UMCDF will be similar. At ANCDF and PBCDF, LIC furnace and PAS control will be provided by ICS-CONR-114. *ANCDF LIC tag numbers are similar to TOCDF/UMCDF LIC 2 tag numbers and PBCDF LIC tag numbers are similar to TOCDF/UMCDF LIC 1 tag numbers.*

At ANCDF, PBCDF, and UMCDF PFS operations will be controlled by the same PLC as the associated furnace PAS. The DFS PFS will be controlled by ICS-CONR-112; the MPF PFS will be controlled by ICS-CONR-113; the LIC #1 PFS will be controlled by ICS-CONR-114; the LIC #2 PFS will be controlled by ICS-CONR-119.

Intercontroller communications associated with the PASs are included in the programmatic process FAWBs for the respective furnaces: DFS (Book 25), LIC (Book 26), MPF (Book 27).

APPENDIX H

References

PROGRAMMATIC

CSDP Control Systems Software Design Guide, Revision 19, 3-12-93.

Programmatic Process FAWB Maintenance Plan, Revision 0, 12-8-98.

RFI S-ALL-216, Clarification/Modification on Control Sequence for PAS ID Fan, 10/27/98.

RFI S-ALL-232, Define Analog Alarm Limits, August 5, 1999.

RFI S-ALL-249, Operation of CEMS, June 5, 2000.

ANCDF ***(through ECP ANEC1312PFS, September 2001)***

ANCDF PFS Risk Assessment FAWB, PAS Filter System, October, 1996.

ANCDF System Hazard Analysis, November 1997.

ANCDF Mass & Energy Balances, Rev.6, August 1998, transmitted by PC-14885, September 11, 1998.

ANCDF Mass & Energy Balances for RCRA, PC-15825 (DFS & DFS-PAS, Rev.5b), June 18, 1999; PC-15851 (MPF & MPF-PAS, Rev.5c), June 25, 1999; and FOG-8539 (MPF-PFS, Rev.6), August 6, 1999.

ANCDF Process Design Basis, Rev.1, May 2000, (PC-16994; June 2, 2000).

ANCDF Process Design Analysis without calculations, Rev.1, December 1998, transmitted by PC-15293, Jan 5, 1999.

ANCDF Facility Design Analysis without calculations, Rev.3, July 1999, transmitted by PC-15949, July 27, 1999 (R0 replacement pages transmitted by PC-15293, Jan 5, 1999).

ANCDF Essential Power Loading Study Update, March 2, 2001, transmitted by PC-17851.

ANCDF Control System Source Code, January 2000.

ANCDF Control System Source Code, April 2001 (used as cited only).

ANCDF (cont'd)

AN-00-D-501/1, Rev.2, 6-22-01	*Non-Agent Monitor Details, P&ID*
AN-00-D-501/2, Rev.2, 6-22-01	*Non-Agent Monitor Details, P&ID*
AN-00-D-501/3, Rev.2, 6-1-01	*Non-Agent Monitor Details, P&ID*
AN-00-D-501/4, Rev.2, 6-22-01	*Non-Agent Monitor Details, P&ID*
AN-1-D-528, *Rev.5, 6-22-01*	Metal Parts Furnace, P&ID
AN-1-D-547/1, *Rev.7, 6-1-01*	LIC Furnace – Secondary Chamber, P&ID
AN-6-D-502, *Rev.8, 8-9-01*	LIC - PAS Mist Eliminator (Spare), P&ID
AN-6-D-504, *Rev.9, 6-22-01*	MPF PAS Quench And Scrubber Towers, P&ID
AN-6-D-505, *Rev.9, 6-22-01*	MPF PAS Mist Eliminator And Blowers, P&ID
AN-6-D-506, *Rev.9, 6-22-01*	DFS PAS Quench And Scrubber Towers, P&ID
AN-6-D-507, *Rev.7, 6-22-01*	DFS Exhaust Blowers & Stack, P&ID
AN-6-D-508, *Rev.8, 8-9-01*	DFS PAS Mist Eliminator, P&ID
AN-6-D-509, *Rev.7, 6-22-01*	DFS Afterburner, P&ID
AN-6-D-510, Rev.2, 3-27-98	Recovered Water System, P&ID
AN-6-D-511, *Rev.11, 8-9-01*	LIC - PAS Quench And Scrubber Towers, P&ID
AN-6-D-512, *Rev.8, 8-9-01*	LIC - PAS Mist Eliminator, P&ID
AN-6-D-517, *Rev.8, 6-1-01*	LIC Exhaust Blower, P&ID
AN-6-D-523, *Rev.2, 5-21-99*	PFS Carbon Filter Units Detail, P&ID
AN-6-D-524, *Rev.2, 6-1-01*	DFS PFS Gas Reheater & Filters, P&ID
AN-6-D-525, *Rev.3, 6-1-01*	LIC - PFS Gas Reheater & Filters, P&ID
AN-6-D-526, *Rev.2, 6-1-01*	MPF PFS Gas Reheater and Filter, P&ID
AN-6-D-527, *Rev.7, 6-22-01*	MPF/DFS PAS Spare Mist Eliminator, P&ID
AN-6-D-528, *Rev.2, 11-5-99*	MPF Clean Liquor Air Cooler, P&ID
AN-6-D-529, Rev.2, 7-2-98	LIC - Clean Liquor Air Cooler, P&ID
AN-6-D-530, Rev.1, 3-27-98	DFS Clean Liquor Air Cooler (Bays A/B), P&ID
AN-6-D-531, Rev.1, 3-27-98	DFS Clean Liquor Air Cooler (Bays C/D), P&ID
AN-6-E-501, *Rev.8, 8-10-01*	SPS-MCC-111 480V MCC-PAS No.1, Single Line Diagram
AN-6-E-502, *Rev.8, 8-10-01*	SPS-MCC-112 480V MCC-PAS No 2, Single Line Diagram
AN-6-E-603, Rev.1, 10-10-97	SPS-SWGR-105/106 4160V Switchgear, Single Line Diagram
AN-6-E-605, Rev.1, 3-27-98	SPS-SWBD-103/104 480V Switchboard, Single Line Diagram
AN-6-F-501, *Rev.7, 8-4-99*	Pollution Abatement System (PAS) for DFS Process Flow Diagram
AN-6-F-502, Rev.3, 5-8-98	*Pollution Abatement System (PAS) Stack Process Flow Diagram*
AN-6-F-503, *Rev.6, 8-4-99*	Pollution Abatement System (PAS) for MPF, Process Flow Diagram
AN-6-F-504, Rev.2, 3-27-98	MPF/DFS Mist Eliminator Vessel Spare, Process Flow Diagram
AN-6-F-506, *Rev.7, 8-4-99*	Pollution Abatement System (PAS) For LIC, Process Flow Diagram

ANCDF (cont'd)

AN-6-F-507, *Rev.3, 8-4-99*	DFS PAS Filter System, Process Flow Diagram
AN-6-F-508, *Rev.5, 8-4-99*	LIC PAS Filter System, Process Flow Diagram
AN-6-F-509, *Rev.3, 8-4-99*	MPF PAS Filter System, Process Flow Diagram
AN-6-F-510, *Rev.2, 5-21-99*	Filter System Common Equipment, Process Flow Diagram
AN-6-F-511, Rev.1, 9-3-99	*DFS PAS and DFS PFS Max-Min Tables, Process Flow Diagram*
AN-6-F-512, Rev.1, 9-3-99	*LIC PAS and LIC PFS Max-Min Tables, Process Flow Diagram*
AN-6-F-513, Rev.1, 9-3-99	*MPF PAS and MPF PFS Max-Min Tables, Process Flow Diagram*
AN-6-H-504, Rev.4, 8-31-01	*DFS Cyclone Filter HVAC, Exhaust Control Diagram*

PBCDF *(through Fast Track 10, October 2001)*

PBCDF System Hazard Analysis, November 1996.

PBCDF Mass & Energy Balances, transmitted by PC-15097, October 30, 1998.

PBCDF Mass & Energy Balances for RCRA, transmitted by PC-14928, August 18, 1998.

PBCDF Process Design Basis, May 16, 1999, transmitted with Change Case PB-07-98-0021 (PC-15502), May 25, 1999.

PBCDF Process Design Analysis without calculations, Rev.4, April 1999, transmitted with Change Case PB-07-98-0021 (PC-15502), May 25, 1999.

PBCDF Facility Design Analysis without calculations, Rev.4, April 1999, transmitted with Change Case PB-07-98-0021 (PC-15502), May 25, 1999.

PBCDF Essential Power Loading Study Update without calculations, March 14, 2001.

PB-1-D-526, *Rev.7, 9-21-01*	LIC Furnace – Secondary Chamber, P&ID
PB-1-D-528, *Rev.3, 5-10-01*	Metal Parts Furnace, P&ID
PB-6-D-501, *Rev.8, 1-24-01*	LIC - PAS Quench And Scrubber Towers, P&ID
PB-6-D-502, *Rev.5, 2-26-01*	LIC - PAS Mist Eliminator (Spare), P&ID
PB-6-D-504, *Rev.9, 5-10-01*	MPF PAS Quench And Scrubber Towers, P&ID
PB-6-D-505, *Rev.7, 9-21-01*	MPF PAS Mist Eliminator And Blowers, P&ID
PB-6-D-506, *Rev.9, 2-26-01*	DFS PAS Quench And Scrubber Towers, P&ID
PB-6-D-507, *Rev.4, 9-21-01*	DFS Exhaust Blowers & Stack, P&ID
PB-6-D-508, *Rev.6, 5-10-01*	DFS PAS Mist Eliminator, P&ID
PB-6-D-509, *Rev.6, 5-10-01*	DFS Afterburner, P&ID
PB-6-D-510, *Rev.2, 1-24-01*	Recovered Water System, P&ID

PBCDF (cont'd)

PB-6-D-517, *Rev.3, 9-21-01*	LIC Exhaust Blower, P&ID
PB-6-D-523, *Rev.2, 1-24-01*	PFS Carbon Filter Units Detail, P&ID
PB-6-D-524, *Rev.2, 9-21-01*	DFS PFS Gas Reheater & Filters, P&ID
PB-6-D-526, *Rev.2, 9-21-01*	MPF PFS Gas Reheater and Filter, P&ID
PB-6-D-527, *Rev.5, 2-26-01*	MPF/DFS PAS Spare Mist Eliminator, P&ID
PB-6-D-528, *Rev.3, 4-13-01*	MPF Clean Liquor Air Cooler, P&ID
PB-6-D-530, *Rev.2, 4-13-01*	DFS Clean Liquor Air Cooler (Bays A/B), P&ID
PB-6-D-531, *Rev.2, 4-13-01*	DFS Clean Liquor Air Cooler (Bays C/D), P&ID
PB-6-D-535, *Rev.2, 9-21-01*	LIC PFS Gas Reheater & Filter, P&ID
PB-6-D-539, Rev.1, 10-30-98	LIC Clean Liquor Air Cooler, P&ID
PB-6-E-501, *Rev.4, 1-24-01*	SPS-MCC-111 480V MCC-PAS No.1, Single Line Diagram
PB-6-E-502, *Rev.4, 5-14-01*	SPS-MCC-112 480V MCC-PAS No 2, Single Line Diagram
PB-6-E-603, Rev.1, 7-10-98	SPS-SWGR-105/106 480V Switchgear, Single Line Diagram
PB-6-E-605, Rev.1, 10-30-98	SPS-SWBD-103/104 480V Switchboard, Single Line Diagram
PB-6-F-501, Rev.5, 10-30-98	Pollution Abatement System (PAS) For DFS Process Flow Diagram
PB-6-F-502, Rev.5, 10-30-98	Pollution Abatement System (PAS) For LIC, Process Flow Diagram
PB-6-F-503, *Rev.6, 5-10-01*	Pollution Abatement System (PAS) For MPF, Process Flow Diagram
PB-6-F-504, Rev.1, 10-30-98	MPF/DFS Mist Eliminator Vessel Spare, Process Flow Diagram
PB-6-F-507, Rev.1, 10-30-98	DFS PAS Filter System, Process Flow Diagram
PB-6-F-508, Rev.1, 10-30-98	LIC PAS Filter System, Process Flow Diagram
PB-6-F-509, Rev.1, 10-30-98	MPF PAS Filter System, Process Flow Diagram
PB-6-F-510, Rev.1, 10-30-98	PAS Filter System Common Equipment, Process Flow Diagram
PB-6-H-504, Rev.2, 7-10-98	*DFS Cyclone Filter HVAC, Exhaust Control Diagram*

TOCDF

TOCDF Functional Analysis Workbook, Section III, Chapter 5.9, Pollution Abatement System, *Rev.2, Change 10, 15 March 2001.*

TOCDF Control System Source Code, *February 2000.*

TOCDF Control System Source Code, April 2001 (used as cited only).

TOCDF Loveland Instrument Calibration Database, *August 2000.*

TOCDF (cont'd)

TOCDF Standing Operating Procedure, Deactivation Furnace System Pollution Abatement System Startup, Operation and Shutdown, TE-SOP-003, *Rev.4, Change 5, 10 May, 2001.*

TOCDF Standing Operating Procedure, Liquid Incinerator System Pollution Abatement System Startup, Operation and Shutdown, TE-SOP-005, *Rev.6, Change 10, 10 May, 2001.*

TOCDF Standing Operating Procedure, Metal Parts Furnace Pollution Abatement System Startup, Operation and Shutdown, TE-SOP-011, *Rev.3, Change 10, 27 September, 2001.*

TOCDF System Hazard Analysis, November 1993.

TOCDF Update Hazard Analysis, October 1993.

TE-6-D-501, *Rev.32, 11-16-00*	LIC No. 1 - PAS Quench and Venturi, P&ID
EG-6-D-501, *Rev.30, 6-2-00*	LIC No. 1 - PAS Scrubber Tower, P&ID
TE-6-D-502, *Rev.18, 7-13-99*	LIC No. 1 - PAS Demisters, P&ID
TE-6-D-503, *Rev.18, 1-19-00*	Demister Acid Wash System, P&ID
TE-6-D-504, *Rev.33, 12-15-99*	MPF PAS Quench And Scrubber Towers, P&ID
EG-6-D-504, *Rev.31, 6-2-00*	MPF PAS Scrubber Towers, P&ID
TE-6-D-505, *Rev.25, 7-14-99*	MPF PAS Demister, P&ID
EG-6-D-505, *Rev.24, 7-9-01*	MPF PAS Exhaust Blowers, P&ID
TE-6-D-506, *Rev.34, 7-18-01*	DFS PAS Quench And Venturi, P&ID
EG-6-D-506, *Rev.33, 3-15-01*	DFS PAS Scrubber Tower, P&ID
TE-6-D-507, *Rev.21, 7-9-01*	DFS Exhaust Blowers & Stack, P&ID
EG-6-D-507, Rev.17, 3-9-98	DFS Lube Oil Skid, P&ID
TE-6-D-508, *Rev.22, 3-2-00*	DFS PAS Demister, P&ID
TE-6-D-510, *Rev.20, 7-5-01*	Recovered Water System, P&ID
TE-6-D-511, *Rev.31, 6-14-00*	LIC No. 2 - PAS Quench And Venturi, P&ID
EG-6-D-511, *Rev.31, 6-2-00*	LIC No. 2 - PAS Scrubber Tower, P&ID
TE-6-D-512, *Rev.18, 7-13-99*	LIC No. 2 - PAS Demister, P&ID
TE-6-D-517/1, *Rev.24, 7-9-01*	LIC 1 Exhaust Blower, P&ID
TE-6-D-517/2, *Rev.23, 7-9-01*	LIC 2 Exhaust Blower, P&ID
TE-6-D-527, Rev.12, 3-30-98	MPF/DFS PAS Spare Demister, P&ID
TE-1-E-901/1, Rev.12, 2-5-98	PPS-SWGR-101 4160V Switchgear, Single Line Diagram
TE-1-E-901/2, Rev.12, 2-5-98	PPS-SWGR-102 4160V Switchgear, Single Line Diagram
TE-6-E-501, *Rev.17, 7-28-00*	SPS-MCC-111 480V MCC-PAS No.1, Single Line Diagram
TE-6-E-502, *Rev.21, 7-28-00*	SPS-MCC-112 480V MCC-PAS No 2, Single Line Diagram
TE-6-F-501, Rev.11, 2-23-98	Pollution Abatement System (PAS) For DFS Process Flow Diagram

TOCDF (cont'd)

TE-6-F-502, Rev.12, 12-17-97	Pollution Abatement System (PAS) for LIC #1, Process Flow Diagram
TE-6-F-503, *Rev.11, 1-6-99*	Pollution Abatement System (PAS) For MPF, Process Flow Diagram
TE-6-F-504, Rev.2, 12-17-97	MPF/DFS Demister Vessel Spare, Process Flow Diagram
TE-6-F-506, *Rev.12, 8-24-98*	Pollution Abatement System (PAS) For LIC #2, Process Flow Diagram

UMCDF *(through Change Case CCP-0178 and CCP-0148, September 2001)*

UMCDF Process Design Basis, *July 1999, Rev.6, transmitted by PC-15860, July 1, 1999.*

UMCDF Process Design Analysis without calculations, *Rev.5, Aug 1998, transmitted by PC-14812, August 28, 1998.*

UMCDF Facility Design Analysis without calculations, *Rev.6, Aug 1998, transmitted by PC-14812, August 28, 1998.*

UMCDF Mass & Energy Balances for RCRA, transmitted by PC-15946, July 23, 1999.

UMCDF Mass & Energy Balances, transmitted by PC-14102, April 15, 1998.

UMCDF Essential Power Loading Study Update, February 23, 2001, transmitted by PC-17845.

UMCDF Instrument Summary, *Rev. 18, August 2000*.

UM-1-D-527/1, *Rev.8, 8-28-01*	LIC Furnace No.1 – Secondary Chamber, P&ID
UM-1-D-528, *Rev.4, 5-18-01*	Metal Parts Furnace, P&ID
UM-1-D-547/1, *Rev.8, 8-28-01*	LIC Furnace No.2 – Secondary Chamber, P&ID
UM-6-D-501, *Rev.9, 8-31-01*	LIC No. 1 - PAS Quench and Scrubber Towers, P&ID
UM-6-D-502, *Rev.6, 7-20-01*	LIC - PAS Mist Eliminator (Spare), P&ID
UM-6-D-504, *Rev.8, 8-31-01*	MPF PAS Quench and Scrubber Towers, P&ID
UM-6-D-505, *Rev.10, 7-20-01*	MPF PAS Mist Eliminator and Blowers, P&ID
UM-6-D-506, *Rev.7, 8-31-01*	DFS PAS Quench and Scrubber Towers, P&ID
UM-6-D-507, *Rev.8, 6-1-01*	DFS Exhaust Blowers & Stack, P&ID
UM-6-D-508, *Rev.7, 7-20-01*	DFS PAS Mist Eliminator, P&ID
UM-6-D-509, *Rev.7, 5-18-01*	DFS Afterburner, P&ID
UM-6-D-510, Rev.2, 8-1-97	Recovered Water System, P&ID
UM-6-D-511, *Rev.9, 8-31-01*	LIC No. 2 - PAS Quench and Scrubber Towers, P&ID
UM-6-D-512, *Rev.6, 7-20-01*	LIC No. 2 - PAS Mist Eliminator, P&ID

UMCDF (cont'd)

UM-6-D-517/1, *Rev.7, 6-1-01*	LIC No. 1 - Exhaust Blower, P&ID
UM-6-D-517/2, *Rev.7, 6-1-01*	LIC No. 2 - Exhaust Blower, P&ID
UM-6-D-523, *Rev.5, 10-4-00*	PFS Carbon Filter Units Detail, P&ID
UM-6-D-524, *Rev.3, 9-11-00*	DFS PFS Gas Reheater & Filters, P&ID
UM-6-D-525, *Rev.3, 8-16-00*	LIC 2 - PFS Gas Reheater & Filters, P&ID
UM-6-D-526, *Rev.3, 10-4-00*	MPF PFS Gas Reheater and Filter, P&ID
UM-6-D-527, *Rev.5, 7-20-01*	MPF/DFS PAS Spare Mist Eliminator, P&ID
UM-6-D-528, *Rev.4, 10-4-00*	MPF Clean Liquor Air Cooler, P&ID
UM-6-D-529, *Rev.4, 8-16-00*	LIC 2 - Clean Liquor Air Cooler, P&ID
UM-6-D-530, *Rev.3, 9-11-00*	DFS Clean Liquor Air Cooler (Bays A/B), P&ID
UM-6-D-531, *Rev.3, 9-11-00*	DFS Clean Liquor Air Cooler (Bays C/D), P&ID
UM-6-D-532, Rev.1, 8-31-01	*Strainers, P&ID*
UM-6-D-533/1, Rev.1, 5-18-01	*Non-Agent Monitor Details, P&ID*
UM-6-D-533/2, Rev.1, 5-18-01	*Non-Agent Monitor Details, P&ID*
UM-6-D-533/3, Rev.1, 5-18-01	*Non-Agent Monitor Details, P&ID*
UM-6-D-533/4, Rev.1, 5-18-01	*Non-Agent Monitor Details, P&ID*
UM-6-D-535, *Rev.3, 8-16-00*	LIC 1 - PFS Gas Reheater & Filter, P&ID
UM-6-D-539, *Rev.4, 8-16-00*	LIC 1 - Clean Liquor Air Cooler, P&ID
UM-6-E-501, Rev.2, 6-5-98	SPS-MCC-111 480V MCC-PAS No.1, Single Line Diagram
UM-6-E-502, Rev.2, 6-5-98	SPS-MCC-112 480V MCC-PAS No 2, Single Line Diagram
UM-6-E-603, Rev.1, 8-1-97	SPS-SWGR-105/106 4160v Switchgear, Single Line Diagram
UM-6-E-605, Rev.1, 8-1-97	SPS-SWBD-103/104 480V Switchboard, Single Line Diagram
UM-6-F-501, *Rev.5, 9-11-00*	Pollution Abatement System (PAS) For DFS Process Flow Diagram
UM-6-F-502, *Rev.4, 8-16-00*	Pollution Abatement System (PAS) For LIC #1, Process Flow Diagram
UM-6-F-503, *Rev.5, 10-4-00*	Pollution Abatement System (PAS) For MPF, Process Flow Diagram
UM-6-F-504, *Rev.2, 9-11-00*	MPF/DFS Mist Eliminator Vessel Spare, Process Flow Diagram
UM-6-F-506, *Rev.4, 8-16-00*	Pollution Abatement System (PAS) For LIC #2, Process Flow Diagram
UM-6-F-507, *Rev.5, 5-18-01*	DFS PAS Filter System, Process Flow Diagram
UM-6-F-508, *Rev.6, 5-18-01*	LIC #1 PAS Filter System, Process Flow Diagram
UM-6-F-509, *Rev.4, 5-18-01*	MPF PAS Filter System, Process Flow Diagram
UM-6-F-510, *Rev.2, 10-4-00*	PAS Filter System Common Equipment, Process Flow Diagram
UM-6-F-511, *Rev.6, 5-18-01*	LIC #2 PAS Filter System, Process Flow Diagram
UM-6-H-504, Rev.3, 9-11-00	*DFS Cyclone Filter HVAC, Exhaust Control Diagram*