DRAWING SIZE A

CADDS REV - 500

APPLICATION		REVISIONS			
NEXT ASSY	USED ON	SYM	DESCRIPTION	DATE	APPROVAL
		–	PRODUCT BASELINE ERR M2Q2006	920121	HJS

THIS DRAWING HAS BEEN GENERATED ON A CAD SYSTEM LOCATED AT ARDEC, PICATINNY ARSENAL, N.J. CHANGES MUST BE INCORPORATED IN THIS SYSTEM.

REV																							
SHEET																							
REV																							
SHEET																							
REV STATUS OF SHEETS	REV	–	–	–	–	–	–	–															
	SHEET	1	2	3	4	5	6	7															

ORIGINAL DATE OF DRAWING 92-01-21		U.S. ARMY ARMAMENT RESEARCH, DEVELOPMENT AND ENGINEERING CENTER PICATINNY ARSENAL, NEW JERSEY 07806-5000
DRAFTSMAN HJS	CHECKER	ROTATING BAND SEAT TESTER
ENGR J.S.	ENGR	
ENGR	ENGR	
		SIZE A / CAGE CODE 19200 / 9280429
		SCALE – / UNIT WT. / SHEET 1 OF 7

SMCAR FORM 70, 1 JUL 87(TEMP) REPLACES SMCAR FORM 70, 1 JUN 86(TEMP) WHICH IS OBSOLETE

DRAWING SIZE A

ROTATING BAND SEAT TESTER

1.0 PURPOSE:

1.1 THIS SPECIFICATION IS PROVIDED TO ESTABLISH THE NECESSARY REQUIREMENTS AND CHARACTERISTICS FOR THE PROCUREMENT OF A TESTING MACHINE FOR THE NONDESTRUCTIVE MEASUREMENT OF THE GAP BETWEEN A PROJECTILE AND ITS ROTATING BAND.

2.0 APPLICABLE DRAWINGS:
8593429- BAND SEATING TESTING MACHINE INDENTOR AND TEST DATA

3.0 REQUIREMENTS:

3.1 THE BAND SEAT TESTER SHALL BE CAPABLE OF MEASURING DIAMETRIC CLEARANCES BETWEEN THE ROTATING BAND AND BAND SEAT IN THE RANGE OF .005 INCHES TO .030 INCHES WITH AN ACCURACY OF 0.0005 INCHES.

3.2 THE FORCES SPECIFIED IN FIGURE 2 SHALL BE APPLIED TO THE PROJECTILES THROUGH THE INDENTORS AS SHOWN IN FIGURE 3. POSITIONING OF THE INDENTORS SHALL BE AS SHOWN IN FIGURE 1.

3.3 THE TESTER SHALL BE CAPABLE OF HYDRAULICALLY APPLYING ALL THE FORCES (RAM PRESS) SPECIFIED IN FIGURE 2 AND MEASURING ALL THE CLEARANCES (INDICATED CL) ALSO SPECIFIED IN FIGURE 2.

3.4 THE TESTER SHALL BE CAPABLE OF OPERATING FROM A POWER SOURCE OF 110 VOLTS AC.

3.5 THE TESTER SHALL BE DESIGNED FOR EASE OF CALIBRATION OF THE LOADS AND THE MEASURING INDICATORS. CALIBRATION STANDARDS SHOULD BE SUPPLIED WITH THE TESTER.

4.0 SUGGESTED SOURCE

DETROIT TESTING MACHINE COMPANY
9390 GRINNELL AVE.
DETROIT, MI 48213
TELEPHONE NO. 313-921-0659

TITLE	SIZE	CAGE CODE	
ROTATING BAND SEAT TESTER	A	19200	9280429
	CADDS REV - 500	REVISION LEVEL	- SHEET 2

DRAWING SIZE A

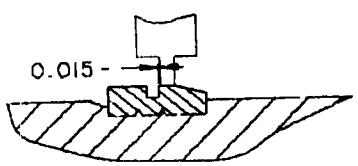

155MM, SHELL, M107, M110, M485

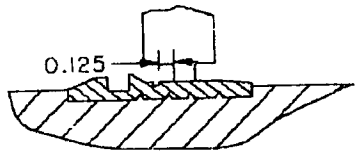

120MM, SHELL, M73

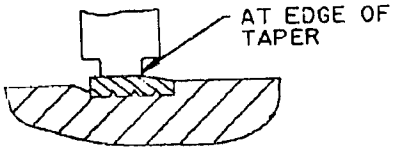

105MM, SHELL, M1, M60, M314A3

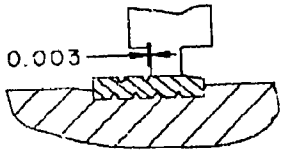

90MM, SHELL, M313, M71, M318

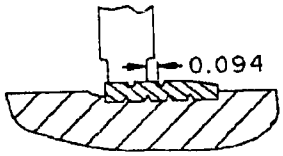

76MM, SHELL, M42A1, M312

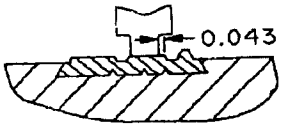

76MM, SHELL, T64, T140

NOSE OF ALL PROJECTILES TO THE RIGHT

THESE ARE ADVISORY DIMENSIONS TO SHOW RELATION OF INDENTOR POSITION TO BAND.

INDENTOR LOCATIONS
FIGURE 1

TITLE	SIZE	CAGE CODE	
ROTATING BAND SEAT TESTER	A	19200	9280429
	CADDS REV - 500	REVISION LEVEL	- SHEET 3

DRAWING SIZE A

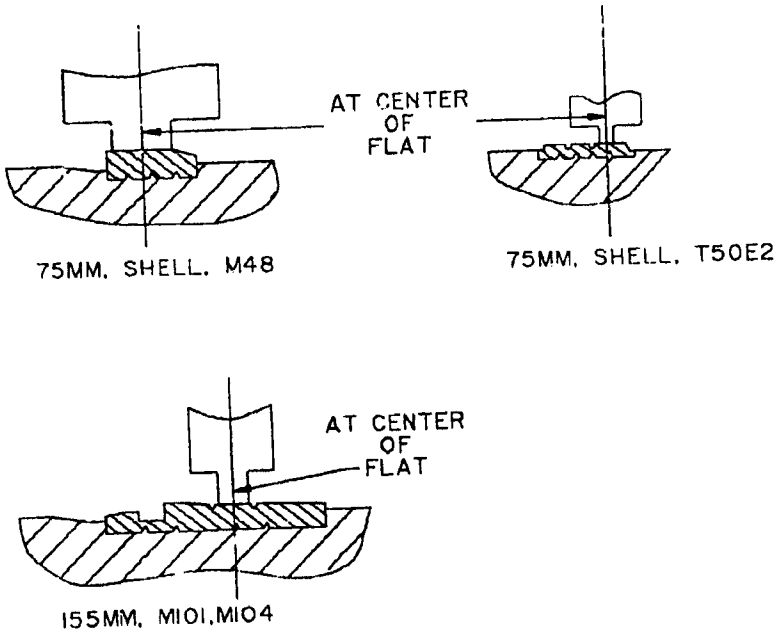

INDENTOR LOCATIONS
FIGURE 1 (CONTINUED)

TITLE	SIZE	CAGE CODE	
ROTATING BAND SEAT TESTER	A	19200	9280429
	CADDS REV - 500	REVISION LEVEL	- SHEET 4

DRAWING SIZE A

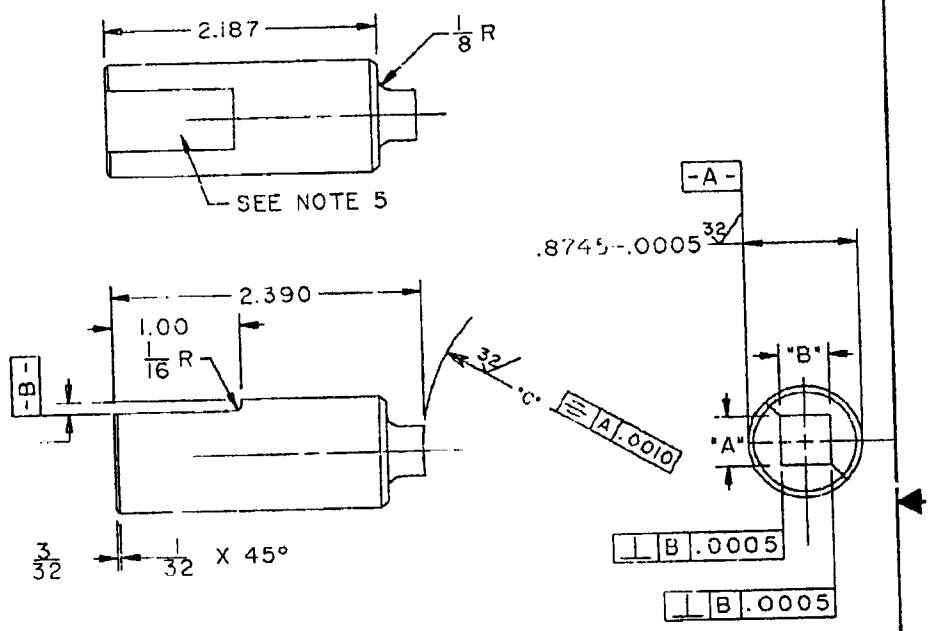

NOTES: -

1- SPEC MIL-STD-10 APPLY
2- MATERIAL: STEEL, TOOL, ALLOY, CLASS 01, SPEC QQ-T-570
3- 63 ALL OVER EXCEPT AS NOTED
4- REMOVE ALL BURRS
5- INDENTORS REQUIRED IN PAIRS, ETCH APPLICABLE CALIBER, PROJECTILE DESIGNATION AND PART NO.
6- TO TEST PROJECTILE M356 USE NEST DWG NO. 10534980 AND BAR DWG NO. 10534993

BAND SEATING TESTING MACHINE INDENTOR AND TEST DATA

FIGURE 2

TITLE	SIZE	CAGE CODE	
ROTATING BAND SEAT TESTER	A	19200	9280429
	CADDS REV - 500	REVISION LEVEL -	SHEET 5

LINE NO.	PROJ. DESIG.	CALIBER	INDENTOR P/N	DIM "A"	DIM "B"	DIM "C"	RAM PRESS	INDICATED CL	REMARKS
1	CALIBRATION INDENTOR		8596063	.500-.001	.250-.001	1.969+.001			
2	M48	75MM	8593490	.3125-.0010	.3125-.0010	1.5055+.0010	9,000	.010	
3	T50E2	75MM	8593429	.500-.001	.1955-.0010	1.5055+.0010	8,000	.007	
4	M42A1	76MM	8593435	.3125-.0010	.3125-.0010	1.549+.001	6,000	.010	
5	M312	76MM	8593435	.3125-.0010	.3125-.0010	1.549+.001	6,000	.008	
6	M340	76MM	8593435	.3125-.0010	.3125-.0010	1.549+.001	8,500	.010	
7	T64	76MM	8593435	.3125-.0010	.3125-.0010	1.549+.001	9,000	.010	
8	T128	76MM	8593435	.3125-.0010	.3125-.0010	1.549+.001	8,500	.010	
9	T140	76MM	8593435	.3125-.0010	.3125-.0010	1.549+.001	9,000	.010	
10	M71	90MM	8593486	.344-.001	.344-.001	1.821+.001	10,000	.010	
11	M313	90MM	8593486	.344-.001	.344-.001	1.821+.001	10,000	.010	
12	M318	90MM	8593486	.344-.001	.344-.001	1.821+.001	10,000	.010	USE EXPENDING MANDREL 10522448
13	M353	90MM	8593486	.344-.001	.344-.001	1.821+.001	10,000	.010	USE EXPENDING MANDREL 10521076
14	M393	105MM	10522451	.564-.001	.250-.001	2.115+.001	7,000	.0075	
15	M416	105MM	10522451	.564-.001	.250-.001	2.115+.001	7,000	.0075	
16	M1	105MM	8593487	.3755-.0010	.3755-.0010	2.1115-.0010	10,000	.008	
17	M60	105MM	8593487	.3755-.0010	.3755-.0010	2.1115-.0010	10,000	.008	
18	M314A2E1	105MM	8593487	.3755-.0010	.3755-.0010	2.1115-.0010	9,000	.008	
19	M73	120MM	8596059	.500-.001	.250-.001	2.410-.001	10,000	.014	
20	M356	120MM	8596059	.500-.001	.250-.001	2.410-.001	10,000	.011	SEE NOTE 6
21	M101	155MM	8593489	.500-.001	.250-.001	3.110-.001	7,000	.009	
22	M104	155MM	8593489	.500-.001	.250-.001	3.110-.001	7,000	.009	
23	M107	155MM	8593489	.500-.001	.250-.001	3.110-.001	7,000	.009	
24	M110	155MM	8593489	.500-.001	.250-.001	3.110-.001	7,000	.009	
25	M21A1	155MM	8593489	.500-.001	.250-.001	3.110-.001	7,000	.009	
26	M449	155MM	8593489	.500-.001	.250-.001	3.110-.001	10,000	.016	USE EXPENDING MANDREL 10534361
27	M437	175MM	10521433	.750-.001	.187-.001	3.505-.001	10,000	.015	FOR FINISHED BAND ONLY
28	M106	8IN	8596061	.500-.001	.250-.001	4.072-.001	8,000	.025	
29	M426	8IN	8596061	.500-.001	.250-.001	4.072-.001	8,000	.025	
30	M485	155MM	8593489	.500-.001	.250-.001	3.110-.001	10,000	.016	USE EXPENDING MANDREL 10534361

BAND SEATING TESTING MACHINE INDENTOR AND TEST DATA
FIGURE 2 (CONTINUED)

TITLE
ROTATING BAND SEAT TESTER

SIZE A
CAGE CODE 19200
CADDS REV - 500
REVISION LEVEL -
SHEET 6

92804429

DRAWING SIZE A

DRAWING SIZE A

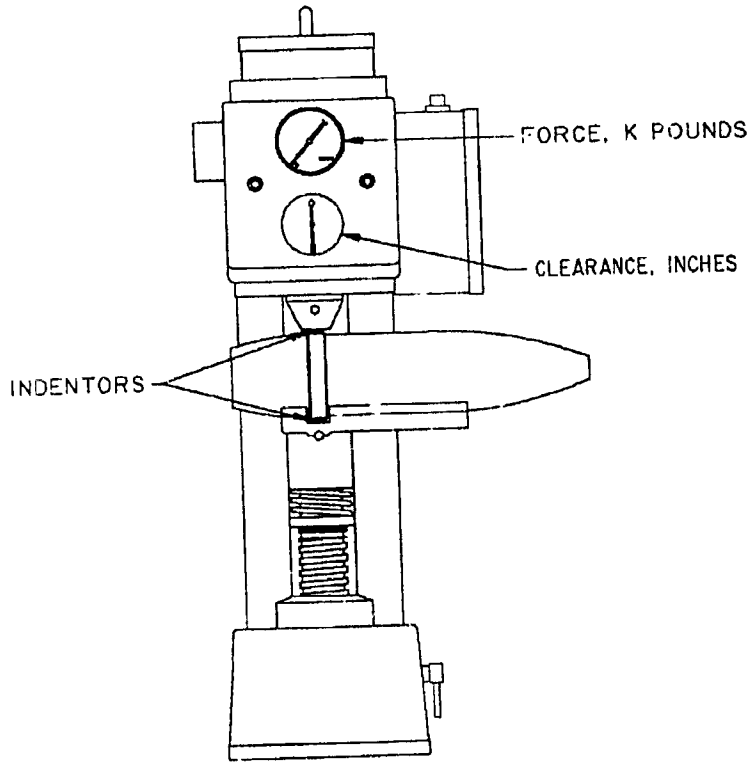

PROJECTILE BAND TESTER

FIGURE 3

TITLE	SIZE	CAGE CODE	
ROTATING BAND SEAT TESTER	A	19200	9280429
	CADDS REV - 500	REVISION LEVEL	- SHEET 7