REVISIONS			
LTR	DESCRIPTION	DATE	APPROVED
B	———	700810	
C	REDRAWN AND REVISED ERR NO. A40087	740827	
D	NORA4A2001/84-02-16	840925	
E	NOR M8A2006/880503	881025	

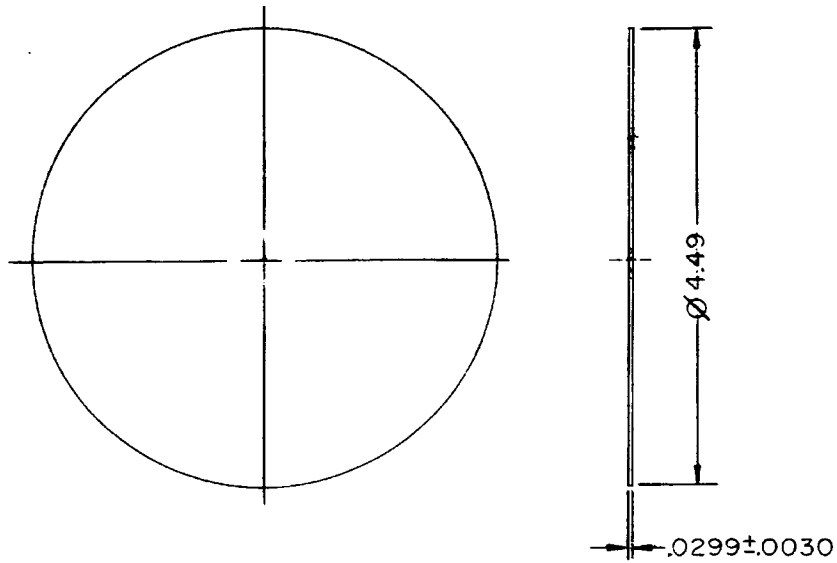

NOTES:—

1—SPEC MIL—A—2550, ANSI—Y14.5 M—1982, AND ANSI-B46.1 APPLY.

2—FINISH ALL OVER 250.

3—MATERIAL:—STEEL, STRIP, COLD ROLLED, TEMPER NO. 4, SPEC ASTM-A109.
ALTERNATIVE MATERIAL:—STEEL, SHEET, CARBON, COLD ROLLED, SPEC ASTM-A366.

CURRENT DESIGN ACTIVITY CAGE CODE 19200
U.S. ARMY
ARMAMENT RESEARCH, DEVELOPMENT AND ENGINEERING CENTER
PICATINNY ARSENAL, NEW JERSEY 07806-5000

PART No. 10535928

MIN. MECHANICAL PROPERTIES	
YS	
TS	
EL 2	
RA	
BH	
RH	

F10535926 | 155MM, M107

SEE ENGINEERING RECORDS

NEXT ASSY | USED ON

APPLICATION

DO NOT APPLY IDENTIFICATION PER MIL-STD-130

UNLESS OTHERWISE SPECIFIED DIMENSIONS ARE IN INCHES
TOLERANCES ON FRACTIONS ±1/64 DECIMALS ±.01 ANGLES ±2°
MATERIAL NOTE 3
HEAT TREAT ———
PROTECTIVE FINISH ———

ORIGINAL DATE 1966 APRIL, 15
DRAFT H.R. CHK
TRACER CHK
ENGR ENGR
SUBMITTED
APPROVED

U. S. ARMY
FRANKFORD ARSENAL
PHILADELPHIA, PA. 19137

COVER, BASE

SIZE B | CODE IDENT NO. 19200 | DRAWING NO. 10535928

SCALE: 1/1 | UNIT WT. — | SHEET 1 OF 1

ARTA

SMUFA Form 1072, 15 Jan 72 (Supersedes edition of 7 Jun 66)

ARMAMENT RESEARCH, DEVELOPMENT & ENGINEERING CENTER

SHEET NO 1

PICATINNY ARSENAL, NEW JERSEY 07806-5000

PARTS LIST : PL-19200-9362571
DOCUMENT NUMBER : D 19200-9362571
NOMENCLATURE : ALT PKG/MKG, PALLET, WOOD, AMMO FOR PJCTL, 155MM, PRAC, M804
CHANGE CONTROL NO.: R8K2016

REVISION SYMBOL: B
REVISION DATE : 09/24/98
ORIGINAL DATE : 09/25/84

AUTHENTICATION-

FIND NUMBER	QTY REQD	CAGE	PART/IDENTIFYING NUMBER	DRAWING SIZE	DRAWING/DOCUMENT NUMBER	NOMENCLATURE OR DOCUMENT TITLE	SUP LIST
	0001	19200	9362571-1	D	9362571	DECKBOARD	
	0002	19200	9362571-2	D	9362571	STRINGER, LONG	
	0004	19200	9362571-3	D	9362571	STRINGER, SHORT	
/1/	ALT	19203	9211789	C	9211789	INK, MKG, OPAQUE - POROUS SURF/AUTO-SEMI-AU	
/1/	AR	19200	TT-I-1795-T2-B		TT-I-1795	INK, MARKING, STENCIL, OPAQUE, TYPE 2, COLOR BLACK	
/1/	OPT	19200	TT-I-1795-T3-B		TT-I-1795	INK, MARKING, STENCIL, TYPE 3, OPAQUE, BLACK	
/2/	OPT	19200	F1667-T1-S4-10D		ASTM-F1667	NAILS, BOX, TYPE 1, STYLE 4A, 10D	
/2/	OPT	19200	F1667-T1-S4-12D		ASTM-F1667	NAILS, BOX, TYPE 1, STYLE 4A, 12D	
/2/	AR	19200	F1667-T1-S4-9D		ASTM-F1667	NAILS, BOX, TYPE 1, STYLE 4A, 9D	
/2/	OPT	19200	F1667-T1-S7-10D		ASTM-F1667	NAILS, COOLER, TYPE 1, STYLE 7, 10D	
/2/	OPT	19200	F1667-T1-S7-9D		ASTM-F1667	NAILS, COOLER, TYPE 1, STYLE 7, 9D	
/2/	OPT	19200	F1667-T1-S8-10D		ASTM-F1667	NAILS, SINKER, TYPE 1, STYLE 8, 10D	
/2/	OPT	19200	F1667-T1-S8-12D		ASTM-F1667	NAILS, SINKER, TYPE 1, STYLE 8, 12D	
/2/	OPT	19200	F1667-T1-S9-10D		ASTM-F1667	NAILS, CORKER, TYPE 1, STYLE 9, 10D	
/2/	OPT	19200	F1667-T1-S9-12D		ASTM-F1667	NAILS, CORKER, TYPE 1, STYLE 9, 12D	
/2/	OPT	19200	F1667-T1-S9-9D		ASTM-F1667	NAILS, CORKER, TYPE 1, STYLE 9, 9D	

TOTAL PAGES TO PARTS LIST: 1

QTY REQD: AR - AS REQUIRED ALT - ALTERNATE, OPT - OPTIONAL, SO - SELECTION OPTIONAL

DRAWING SIZE C
(ARRADCOMR 70-12)

NOTES: -

1 - SPEC MIL-A-2550, ANSI Y14.5-1973 AND MIL-S-70440 APPLY.
2 - MATERIAL: - STEEL, HOT ROLLED PLATE, 3/16 THICK, SPEC ASTM A36/A36M.
3 - FINISH IN ACCORDANCE WITH 5.1.1 AND 20.5 OF MIL-STD-171.
COLOR TO BE LUSTERLESS YELLOW, NO. 33538 OF FED-STD-595.
4 - ALTERNATE PROTECTIVE FINISH: ZINC PLATE, 13 um (0.0005 IN.) THICK. ELECTRODEPOSITED, WITH COLORED CHROMATE TREATMENT PER ASTM SPEC B633 (PARA S1. APPLIES) SERVICE CONDITION SC 3, TYPE II. PLATED SURFACE SHALL HAVE EITHER DULL LUSTER OR OLIVE DRAB COLOR OR BOTH.
5. WHEN ALTERNATE ZINC PLATING FINISH IS USED, ALL DIMENSIONS TO APPLY AFTER PLATING.

REVISIONS

SYM	DESCRIPTION	DATE	APPROVAL
–	PRODUCTION RELEASE ERR A2A2043 / 830118 (ECP A3A2040 / 830726) (ECP A3A2056 / 830826)	830901	
A	NORA3 A 8706/830926	840117	
B	NORA3A2051/830926 ECPA3A2072/831018	840127	
C	NORA3A2069/83-10-26 (ECPA4A2019/84-06-25	85-01-25	
D	NOR A6A2005/860404	860911	MR
E	NOR R8K2004 980401	980427	RLV
F	NOR R8K2016 980717	980924	HJS

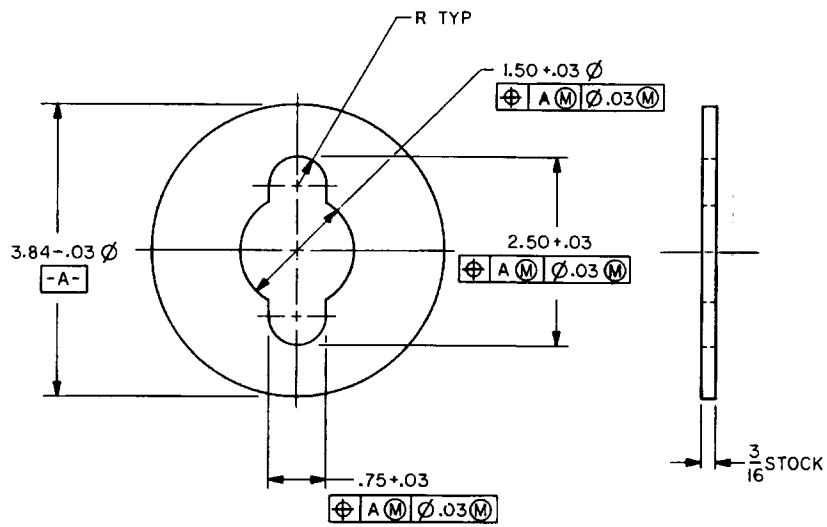

PART NO. 9369960

9280132	
9229038	
8837839	
NEXT ASSY	USED ON
APPLICATION	

MECHANICAL PROPERTIES: YP, TS, EL2, RA, BH, RH

DO NOT SCALE DRAWING
UNLESS OTHERWISE SPECIFIED DIMENSIONS ARE IN INCHES
TOLERANCES ON DECIMALS ±
FRACTIONS ± ANGLES ±

ORIGINAL DATE OF DRAWING 83-09-01
DRAFTSMAN | CHECKER | ENGR | ENGR | ENGR | ENGR

U S ARMY ARMAMENT RESEARCH AND DEVELOPMENT CENTER
DOVER, NEW JERSEY 07801

SUPPORT, COVER

SIZE C | F S C M NO. 19200 | 9369960
SCALE 1/1 | UNIT WT. | SHEET

DISTRIBUTION STATEMENT A.
APPROVED FOR PUBLIC RELEASE;
DISTRIBUTION IS UNLIMITED.

ARRADCOM FORM 67 AUG 77 REPLACES SARPA FORM 1040 OCT 73 WHICH MAY BE USED UNTIL EXHAUSTED

DO NOT DO	APPLY PART NO.
APPLICATION	
NEXT ASSY	USED ON
SEE ENGINEERING RECORDS	

REVISIONS			
LTR	DESCRIPTION	DATE	APPROVED
B	ERR AT6028	760829	[illegible]
C	NOR AOS0008, 801014	821217	[illegible]

I SCOPE:-

1. THIS DOCUMENT COVERS THE INSPECTION EQUIPMENT CODES LISTED ON INSPECTION EQUIPMENT LISTS, AS (AD), (CD), (CE), (SCD): AND SUBMISSION OF CONTRACTOR'S DESIGNS FOR EVALUATION.

II IEL CODES:-

(AD) ARMY DESIGN:-

ARMY DESIGNS ARE DETAILED DRAWINGS WHICH DEPICT COMPLETELY ALL THE INFORMATION NECESSARY FOR THE FABRICATION OF THE ITEM OF INSPECTION EQUIPMENT. THE CONTRACTOR NEED NOT PROVIDE A DESIGN WHEN AN ARMY DESIGN IS LISTED FOR AN ITEM OF INSPECTION EQUIPMENT.

(CD) CONTRACTOR DESIGN:-

CONTRACTOR DESIGNS ARE DESIGNS OF INSPECTION EQUIPMENT FOR WHICH THE GOVERNMENT HAS ASSIGNED DESIGN RESPONSIBILITY TO THE CONTRACTOR. CONTRACTOR DESIGNS SHALL BE SUPPORTED BY DETAILED DRAWINGS WHICH DEPICT ALL INFORMATION NECESSARY TO FABRICATE, CALIBRATE AND OPERATE AN ITEM OF INSPECTION EQUIPMENT. THIS REQUIRES THAT THE NECESSARY VIEWS, DIMENSIONS, MATERIALS, FINISH NOTES, OPERATING AND CALIBRATION INSTRUCTIONS BE PROPERLY DEPICTED IN ACCORDANCE WITH APPROVED PRACTICES TO THE EXTENT THAT FURTHER CALCULATION OR CLARIFICATION WILL NOT BE REQUIRED. ALL SUBMITTED CONTRACTORS DESIGN DRAWINGS SHALL CONFORM TO SPECIFICATION DOD-D-1000 LEVEL 3. DESIGNS SHALL BE SUBMITTED FOR APPROVAL AS SPECIFIED IN SUBMISSION OF INSPECTION EQUIPMENT DESIGNS. ALL INSPECTION EQUIPMENT DESIGNS SUBMITTED ARE INTENDED FOR USE BY THE GOVERNMENT FOR COMPETITIVE PROCUREMENT PURPOSES AND SUCH DESIGNS ARE TO BE PROVIDED IN A FORM WHICH WILL SATISFY THE INTENDED GOVERNMENT USE. THE GOVERNMENT MAY REQUEST THAT ORIGINAL TRACINGS OF CONTRACTOR DESIGNED INSPECTION EQUIPMENT BE SUBMITTED.

(CE) COMMERCIAL EQUIPMENT:-

COMMERCIAL EQUIPMENT IS INSPECTION EQUIPMENT THAT HAS UNIVERSAL APPLICATION FOR A SPECIFIC FUNCTION. IT IS COMPRISED OF ITEMS COMMONLY USED BY INDUSTRY AND GOVERNMENT. CONTRACTORS ARE NOT REQUIRED TO FURNISH DRAWINGS OF COMMERCIAL INSPECTION EQUIPMENT, BUT A LIST OF SUCH EQUIPMENT MUST BE APPROVED BY THE GOVERNMENT. LISTS SHALL BE SUBMITTED FOR APPROVAL TO THE INSPECTION ELEMENT OF THE DCASR ADMINISTERING THE CONTRACT

REV	C	C
SHT	1	2
REV STATUS OF SHTS		

(SCD) SPECIFICATION CONTROL DRAWING:-

SPECIFICATION CONTROL DRAWING DEPICTS THE MINIMUM EQUIPMENT REQUIREMENTS IN OUTLINE. DESCRIPTIVE, DIAGRAMMATIC OR PICTORIAL FORM SPECIFIES REQUIRED PERFORMANCE OR OTHER CHARACTERISTICS. SUCH DRAWINGS ARE PROVIDED BY THE GOVERNMENT AS AN ATTACHMENT TO THE PERTINENT INSPECTION

UNLESS OTHERWISE SPECIFIED DIMENSIONS ARE IN INCHES	ORIGINAL DATE 24 AUG 1976	~~U.S. ARMY FRANKFORD ARSENAL PHILADELPHIA, PA. 19137~~	
TOLERANCES ON FRACTIONS ± DECIMALS ± ANGLES ±	DRAFT / CHK	US ARMY ARMAMENT RESEARCH AND DEVELOPMENT COMMAND DOVER, NEW JERSEY 07801	
MATERIAL	TRACER / CHK	INSPECTION EQUIPMENT LISTS CODING DEFINITIONS	
HEAT TREAT	ENGR / ENGR		
PROTECTIVE FINISH	SUBMITTED / APPROVED	SIZE A / CODE IDENT NO. 19200	DRAWING NO. 8648214
		SCALE: / UNIT WT.	SHEET 1 OF 2

SMUFA Form C3818
11 Dec 64

DO NOT DO	APPLY PART NO.
APPLICATION	
NEXT ASSY	USED ON
SEE ENGINEERING RECORDS	

REVISIONS			
LTR	DESCRIPTION	DATE	APPROVED
A	ERR AT6028	760824	
C	NOR AOS0008,801014	821217	

EQUIPMENT LISTS. APPROVAL OF ITEMS OF INSPECTION EQUIPMENT FABRICATED IN ACCORDANCE WITH THESE DRAWINGS IS DELEGATED TO THE INSPECTION ELEMENT OF THE DEFENSE CONTRACT ADMINISTRATION SERVICE REGION ADMINISTERING THE CONTRACT.

III SUBMISSION OF INSPECTION EQUIPMENT DESIGNS:-

INSPECTION EQUIPMENT DESIGNS SHALL BE SUBMITTED FOR APPROVAL AS SPECIFIED IN THE APPLICABLE CONTRACT. SUBMISSION SHALL INCLUDE BUT NOT BE LIMITED TO:

1. CONTRACT NUMBER WITH ANY APPROPRIATE MODIFICATIONS.

2. GOVERNMENT PRODUCT DRAWING NUMBER WITH APPLICABLE REVISION AND DATE.

3. ITEM PURCHASE DESCRIPTION NUMBER OR MILITARY SPECIFICATION NUMBER WITH APPLICABLE REVISION, AMENDMENT AND DATES.

4. SPECIFICATION PARAGRAPH NUMBER AND DEFECT NUMBER FOR EACH PIECE OF INSPECTION EQUIPMENT SUBMITTED.

5. INSPECTION EQUIPMENT DESIGNS SHALL BE SUBMITTED IN DUPLICATE WITH ANY NECESSARY SUPPORTING CALCULATIONS. THE DRAWINGS SHALL BE SIGNED, DATED, CONTRACTOR NUMBERED AND REVISIONS RECORDED.

6. CATALOGS AND/OR MANUFACTURERS SPECIFICATION SHEETS COVERING ALL COMMERCIAL INSPECTION EQUIPMENT SUBMITTED FOR EVALUATION SHALL BE PROVIDED.

7.

UNLESS OTHERWISE SPECIFIED DIMENSIONS ARE IN INCHES	ORIGINAL DATE 24 AUG 1976	~~U.S. ARMY FRANKFORD ARSENAL PHILADELPHIA, PA. 19137~~	
TOLERANCES ON FRACTIONS ± DECIMALS ± ANGLES ±	DRAFT / CHK	US ARMY ARMAMENT RESEARCH AND DEVELOPMENT COMMAND DOVER, NEW JERSEY 07801	
MATERIAL	TRACER / CHK	INSPECTION EQUIPMENT LISTS CODING DEFINITIONS	
HEAT TREAT	ENGR / ENGR	SIZE A / CODE IDENT NO. 19200	DRAWING NO. 8648214
PROTECTIVE FINISH	SUBMITTED / APPROVED	SCALE: / UNIT WT.	SHEET 2 OF 2

SMUFA Form C3818
11 Dec 64