REVISIONS			
SYM	DESCRIPTION	DATE	APPROVAL
-	EOPA54268-K(REL)10-17-68	10-17-68	
A	ERR 7000985-1	3-22-71	
B	NOR 7200301-1	6-1-72	M
C	NOR 7200843-1	08-01-72	
D	NOR 7201188-1	11-9-72	
E	NOR 7300540-1	4-27-73	
F	NOR 7300999-1	8-31-73	
G	NOR 7500274-1	3-17-75	
H	NOR A052020 81-02-02	81 0403	

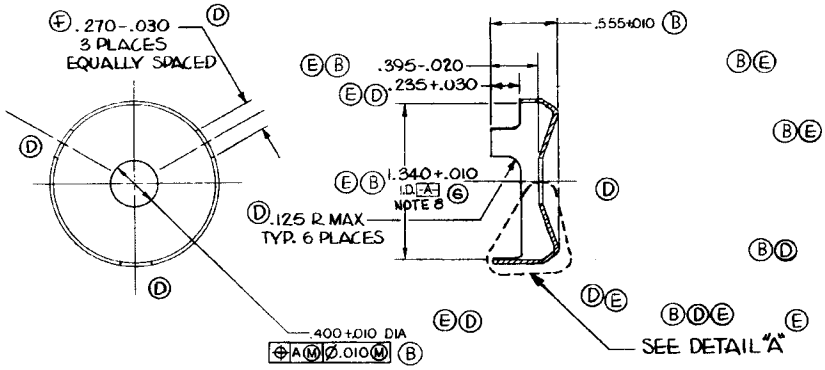

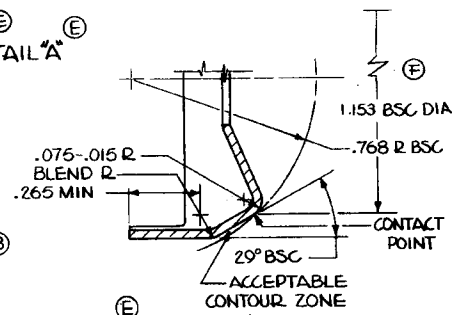

NOTES:-

1- SPEC MIL-A-2550 AND ANSI Y14.5-1973 APPLY.

(F) 2- MATERIAL:-ALUMINUM ALLOY SHEET 2024 TEMPER O, ASTM B209, SEE NOTE 7.

3-.023 MIN MATERIAL THICKNESS AFTER FORMING.

4- MATERIAL THICKNESS .032 ±.002 BEFORE FORMING.

(A) 5-

6- PINCH TRIM EDGE PERMISSIBLE.

7- HEAT TREAT TO CONDITION T4 AFTER FORMING.

(G) 8- 1.365 MAX PERMITTED FOR .235+.030 DIMENSION.

U S ARMY ARMAMENT RESEARCH AND DEVELOPMENT COMMAND
DOVER, NEW JERSEY 07801

PART NO. 8883760

CODE IDENT NO. 19200

(B)(A) 8886360	M550		
NEXT ASSY	USED ON		
APPLICATION			
DO NOT	APPLY PART NO.		

MECHANICAL PROPERTIES: YP, TS, EL2, RA, BH, RH

UNLESS OTHERWISE SPECIFIED DIMENSIONS ARE IN INCHES
TOLERANCES ON DECIMALS ±
FRACTIONS ± ANGLES ±
MATERIAL SEE NOTE 2
HEAT TREATMENT
FINAL PROTECTIVE FINISH SEE NOTE 5

ORIGINAL DATE OF DRAWING 17 OCT 1968
DRAFTSMAN / CHECKER / ENGR / ENGR / ENGR / ENGR
APPROVED R C Smith
APPROVED

~~PICATINNY ARSENAL, DOVER, NEW JERSEY~~

ACTUATOR

SIZE	CODE IDENT NO.	
C	~~19203~~	8883760
SCALE 2/1	UNIT WT.	SHEET