DRAWING SIZE D

REVISIONS				
MODEL REV	DRAWING REV	DESCRIPTION	DATE(YEAR-MO-DA)	APPROVED
N/A	L	NOR R0S3026 / 2001-12-12	2002-01-08	
-	M	NOR R2S3004 / 2002-02-11	2002-05-29	RJC
A	N	NOR R2S2034 / 2002-10-11	2002-11-19	BAC
B	P	NOR R2Q2036 / 2002-12-18	2003-02-26	RLV

NOTES

1. APPLICABLE STANDARDS/SPECIFICATIONS:
   A. MIL-A-2550
   B. DTL9322240 (CHARACTERISTICS NOTED AS M8)
   C. ANSI Y14.5-1973

2. MATERIAL: NYLON INJECTION AND EXTRUSION MATERIAL (NYLON 6/12, GLASS FIBER REINFORCED) ASTM D4066-00/D4000-00: PA0610G43KB173UB090PA160GB143MA025 OR PA0610G43KB158UB090PA170GB143MA025. COLOR: NATURAL; DYE SHALL NOT BE ADDED. THE USE OF ANY RE-GRIND MATERIAL IS PROHIBITED.

3. SURFACE FINISH SHALL BE 125 ALL OVER.

4. ANNULAR GROOVE IS PERMITTED IN BASE OF CARTRIDGE CASE. GROOVE DEPTH SHALL BE .060 MAX. MAXIMUM DIAMETER OF ANNULAR GROOVE SHALL BE .245 MIN FROM MAXIMUM DIAMETER OF CARTRIDGE CASE. INNER GROOVE DIAMETER SHALL BE .610 MIN.

5. A COMBINATION OF .015 MAXIMUM EJECTOR PIN FLASH AND .010 MAXIMUM EJECTOR PIN VESTIGE PERMITTED ON THIS SURFACE.

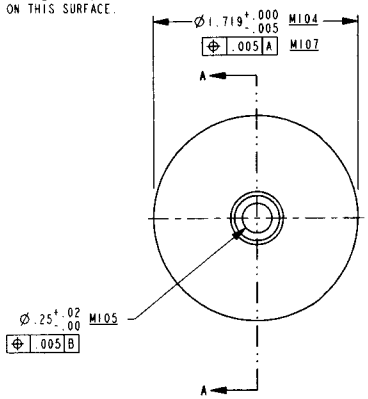

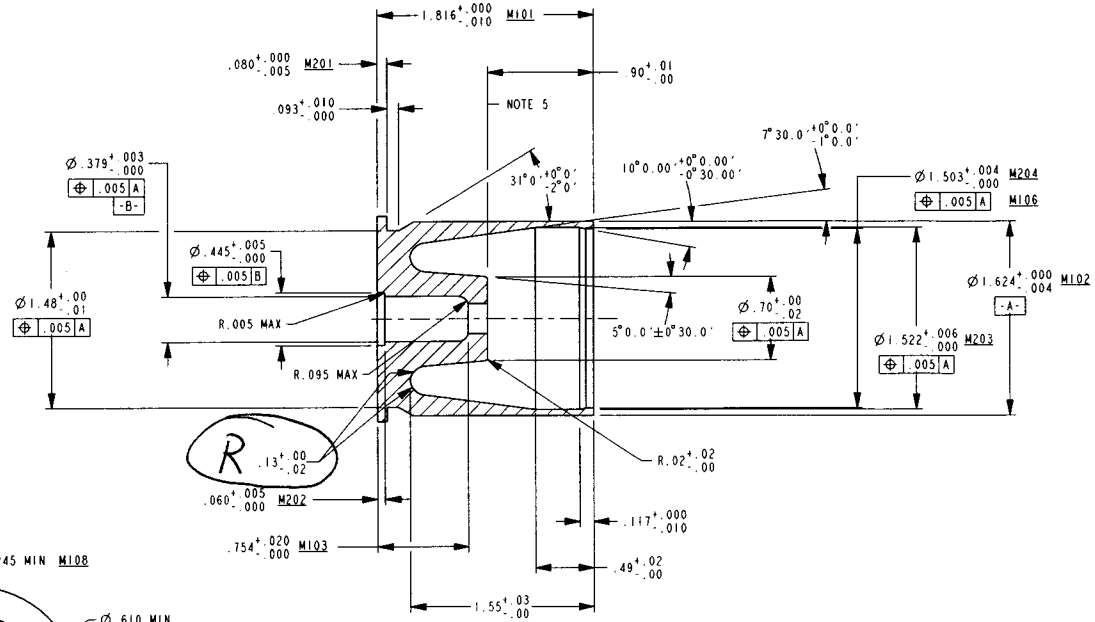

SECTION A-A

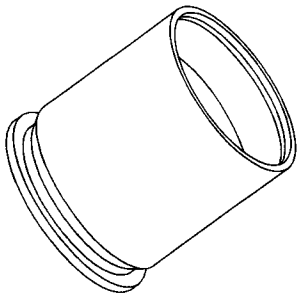

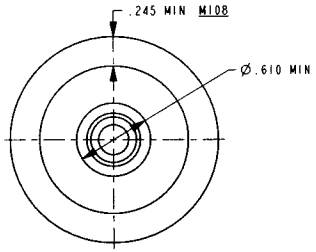

ALTERNATE CONFIGURATION WITH ANNULAR GROOVE
SEE NOTE 4

THIS DRAWING WAS GENERATED FROM A SOLID MODEL AND IS CAD MAINTAINED. CHANGES SHALL BE INCORPORATED BY THE DESIGN ACTIVITY.

PART NO. 9322230

PMC		DO NOT SCALE DRAWING	CONTRACT NUMBER
		UNLESS OTHERWISE SPECIFIED DIMENSIONS ARE IN INCHES	CONTRACTOR
MECHANICAL PROPERTIES		TOLERANCES ON ANGLES ± 2 PLACE DECIMALS ± 3 PLACE DECIMALS ±	DRAWN BY B NICEWANNER — DATE(YEAR-MO-DA) 1977-04-22
YP		THIRD ANGLE PROJECTION	CHECKER J KREIDER — ENGINEER J KUHN
TS			ENGINEER N PATEL — QUALITY ENGINEER R LOCASCIO
EL2			DRAWING APPROVAL W SONGALIA 2002-02-11
RA			
BH	9322239	M781	
RH	NEXT ASSY	USED ON	MATL ENGR — MODELED BY B NICEWANNER — DESIGN APPROVAL R ELBE 2002-02-11
	APPLICATION		

DESIGN ACTIVITY
US ARMY
ARMAMENT RESEARCH, DEVELOPMENT AND ENGINEERING CENTER
PICATINNY ARSENAL, NEW JERSEY 07806-5000

CASE CARTRIDGE
PRACTICE M212

SIZE	CAGE CODE	DWG NO.
D	19200	9322230

SCALE 2/1 — UNIT WT. — SHEET 1 OF 1

DISTRIBUTION STATEMENT A.
APPROVED FOR PUBLIC RELEASE; DISTRIBUTION IS UNLIMITED.

FORMAT D_TACOM_ENG_1.0