REVISIONS				
SYMB	DESCRIPTION	BY	DATE	APPROVED
A	REPLACES REV- WITH CHANGE, SEE NOR 86B0008.20		86/3/7	PSD
B	SEE NOR 86B0039.16		87/3/6	LWF
C	SEE NOR 0675-E-0002.2		87/9/23	PSD
D	SEE NOR 87B0117.21		88/4/20	LWF
E	SEE NOR 90B0021.4		9008XX	FAA
F	SEE NOR 91B0012.20		910425	FAA
G	NOR 92BB052.25 92-09-20		920929	FH
H	SEE NOR 01BB025.17		030109	YHJ
J	SEE NOR 03BB002-06		030327	YHJ
K	SEE NOR 04BB002-21		040428	YHJ

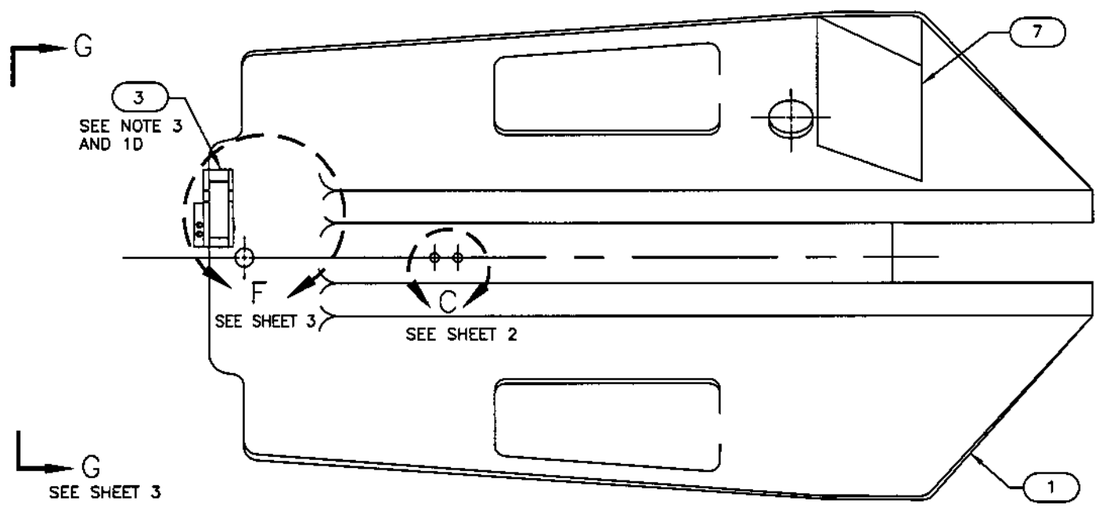

NOTES:

1. FINISH:
   A. APPLY CHEMICAL CONVERSION COATING TO ITEM 1 IN ACCORDANCE WITH MIL-C-5541, CLASS 1A.
   B. APPLY ONE COAT OF ALKYD BASE PRIMER, ITEM 9 TO A DRY FILM THICKNESS OF .0006-.0009.
   C. APPLY ONE COAT OF ENAMEL ITEM 10, TO A TOTAL DRY FILM THICKNESS OF .0009-.0012, COLOR, TACTICAL GRAY, COLOR NO. 36375 OF FED-STD-595.
   D. TOUCH-UP ANY AREAS WHERE PRIMER AND PAINT ARE DAMAGED AFTER RIVETING WITH ITEMS 9 AND 10.
   E. FINISH DOES NOT APPLY TO BAND RELEASE ASSEMBLY, ITEM 3, FIN SPRING, ITEM 4 AND FIN WEDGE, ITEM 7.
2. DELETED.
3. ASSEMBLE RELEASE ASSEMBLY, ITEM 3, WITH RIVETS, ITEM 5, ASSEMBLE FIN SPRING, ITEM 4, WITH RIVETS, ITEM 6, IN ACCORDANCE WITH NASM 47196 AFTER FINISHING.

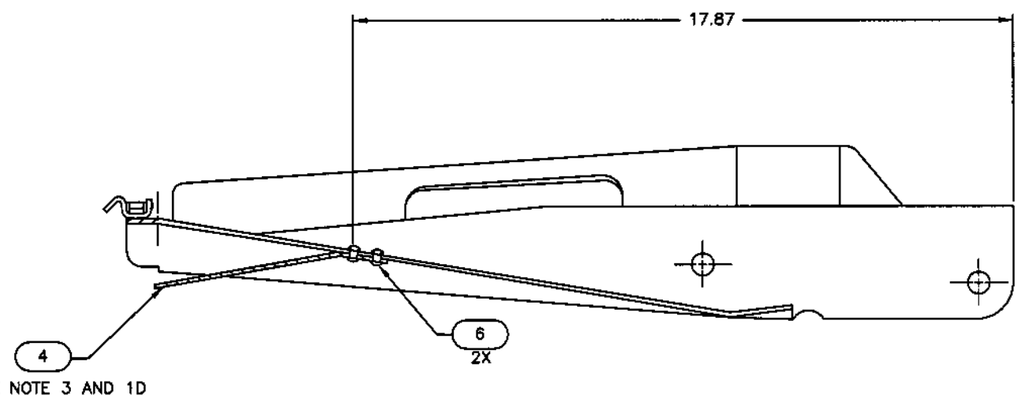

SECTION A—A

K	J	H	G
J	J	H	G
H	H	H	G
G	G	G	G
F	F	F	D
E	D	D	D
D	C	C	C
C	B	B	B
A	A	A	A
SHEET 1	SHEET 2	SHEET 3	SHEET 4

REVISION STATUS OF SHEETS

QTY REQD	NOMENCLATURE OR DESCRIPTION	CODE IDENT NO.	PART OR IDENTIFYING NO.	SPECIFICATION	ITEM NO.
AR	ENAMEL, LUSTRELESS			MIL-E-11195	10
AR	PRIMER COATING, ALKYD BASE ONE COMPONENT		TYPE II CLASS C, COLOR Y	TT-P-1757	9
2	SCREW, SELF-LOCKING, 100° FLAT HEAD		MS21093-456	NASM 21093	8
1	WEDGE, FIN		923AS163		7
2	RIVET		MS20613-6C8	NASM 20613	6
2	RIVET		MS20427F4-7	NASM 20427	5
1	SPRING, FIN		1561419		4
1	RELEASE ASSEMBLY, BAND		923AS255		3
					2
1	FIN		923AS160		1

PARTS LIST

923AS162

CLASSIFICATION OF CHARACTERISTICS (DOD-STD-2101)

CRITICAL – NONE
MAJOR – NONE
MINOR – NONE

Distribution Statement B. Distribution authorized to the DOD and DOD Contractors only because export of the data is restricted (determination 22 AUG 90). Other requests shall be referred to Naval Air Warfare Center Weapons Division (P2560D), Point Mugu, CA 93042

WARNING - This document contains technical data whose export is restricted by the Arms Export Control Act (Title 22, U.S.C. Sec. 2751 et seq) or the export Administration Act of 1979, as amended (Title 50, U.S.C., APP 2401 et seq). Violations of these export laws are subject to severe criminal penalties. Disseminate in accordance with provisions of DOD Directive 5230.24.

DESTRUCTION NOTICE - When this data is no longer needed, destroy it by any means, which will prevent disclosure of contents or reconstruction of the document.

923AS346		BSU-86A/B
923AS159	DL923AS159	BSU-86/B
NEXT ASSY	LISTED ON	USED ON

APPLICATION

UNLESS OTHERWISE SPECIFIED
DIMENSIONS ARE IN INCHES
TOLERANCES
ANGLES ± 0° 30'
.XX DECIMALS ± .03
.XXX DECIMALS ± .010
PART SHALL BE FREE OF BURRS
BROKEN EDGES ____ MAX
FILLETS ____ R MAX
SURFACE ROUGHNESS ✓
INTERPRET DRAWING IN ACCORDANCE WITH STANDARDS PRESCRIBED IN MIL-STD-100
DO NOT SCALE THIS DRAWING

PACIFIC MISSILE TEST CENTER
POINT MUGU, CALIF.
93042

PE	JHD	86/3/6
CM	WA	86/3/6
CHECKED	PSD	86/3/6
DRAWN	MRC	7/11/85

APPROVED FOR NAVAIRSYSCOM
JF PHILLIPS
BY DIRECTION 86/3/6

DEPARTMENT OF THE NAVY
NAVAL AIR SYSTEMS COMMAND
WASHINGTON, D.C. 20360

FIN ASSEMBLY

SIZE	CODE IDENT NO.	NAVAIRSYSCOM DWG NO.	REV
D	30003	923AS162	K

SCALE 1/2 | UNIT WT | SHEET 1 OF 4

REVISIONS				
SYMB	DESCRIPTION	BY	DATE	APPROVED
A	REPLACES REV- WITH CHANGE SEE NOR 86B0008.18		86/3/7	PSD
B	SEE NOR 86B0039.14		87/3/5	LWF
C	SEE NOR 87B0117.19		88/4/20	LWF
D	SEE NOR 88B0121.5		89/2/9	LWF
G	SEE NOR 91B0012.18		910425	FAA
H	NOR 92BB052.23 92-09-20		920929	FAA
J	NOR 94BB043.1		941219	HRJ

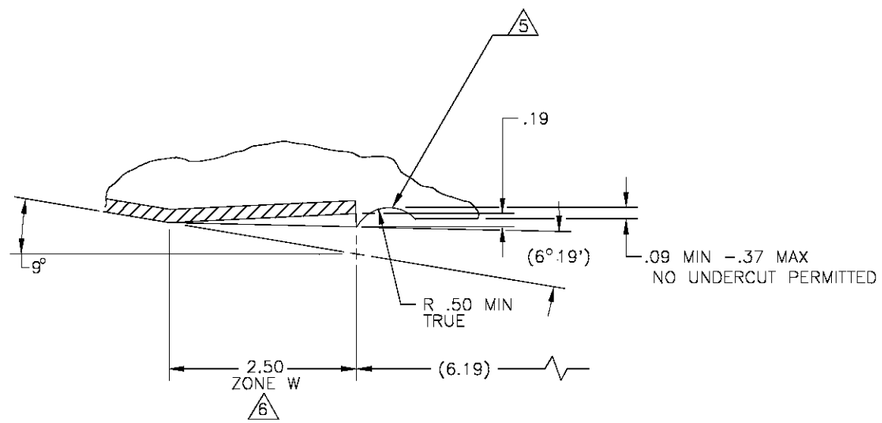

VIEW B
SCALE: 1/1

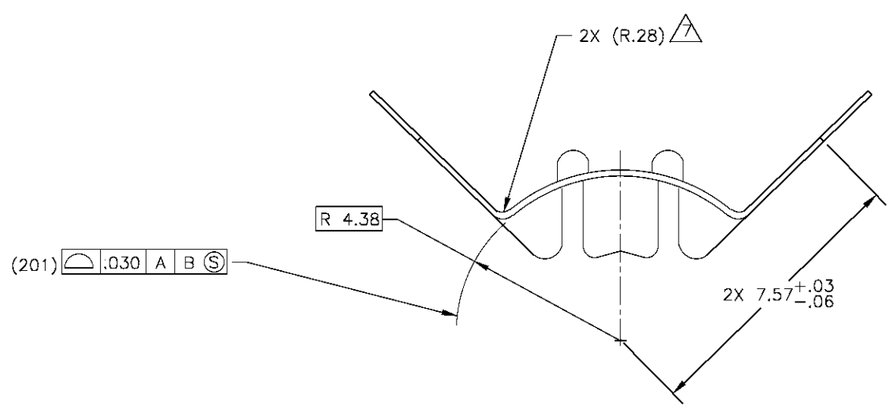

VIEW C-C
ROTATED 90° CCW

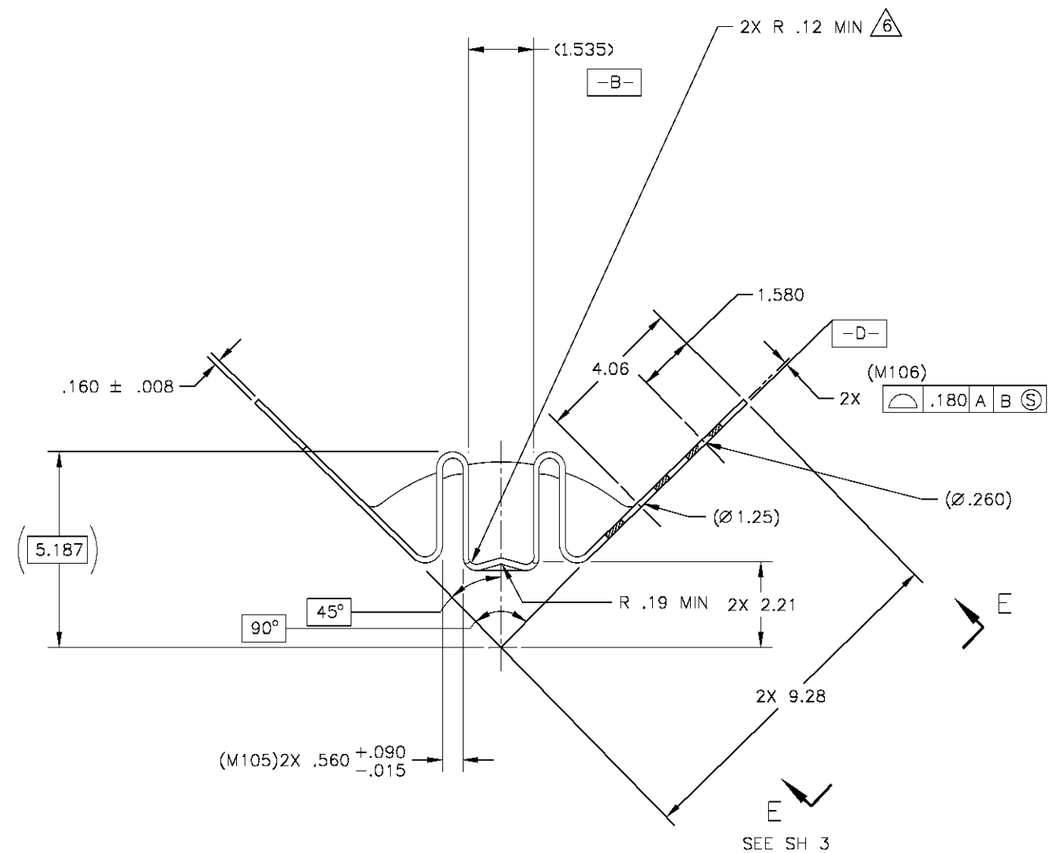

VIEW D-D
ROTATED 90° CW

CLASSIFICATION OF CHARACTERISTICS (DOD-STD-2101)

CRITICAL -
MAJOR -
MINOR -
} SEE SHEET 1

NEXT ASSY	LISTED ON	USED ON
APPLICATION		

UNLESS OTHERWISE SPECIFIED
DIMENSIONS ARE IN INCHES
TOLERANCES
ANGLES ± ____
.XX DECIMALS ± ____
.XXX DECIMALS ± ____
PART SHALL BE FREE OF BURRS
BROKEN EDGES ____ MAX
FILLETS ____ R MAX
SURFACE ROUGHNESS ____ √
INTERPRET DRAWING IN ACCORDANCE WITH MIL-STD-100 AND ANSI Y14.5M-1982
DO NOT SCALE THIS DRAWING

PACIFIC MISSILE TEST CENTER
POINT MUGU, CALIF.
93042

PE	JHD	86/3/6
CM	DA	86/3/6
CHECKED	PSD	86/3/6
DRAWN	MRC	8/12/85

APPROVED FOR NAVAIRSYSCOM
BY DIRECTION

DEPARTMENT OF THE NAVY
NAVAL AIR SYSTEMS COMMAND
WASHINGTON, D.C. 20360

FIN

SIZE	CODE IDENT NO.	NAVAIRSYSCOM DWG NO.	REV
D	30003	923AS160	J

SCALE ____ UNIT WT ____ SHEET 2 OF

923AS160

SOUND DRAWING NO. 8172-2
11NQFMTC 3390 150 (REV 8-79)
U.S. GOVERNMENT PRINTING OFFICE: 1983-584-666

REVISIONS				
SYMB	DESCRIPTION	BY	DATE	APPROVED
A	REPLACES REV – WITH CHANGE SEE NOR 86B0008.18		86/3/7	PSD
B	SEE NOR 86B0039.14		86/3/5	LWF
C	SEE NOR 87B0117.19		88/4/20	LWF
G	SEE NOR 91B0012.18		910425	FAA
H	NOR 92BB052.23 92-09-20		920929	FAA
J	NOR 94BB043.1		941219	HR

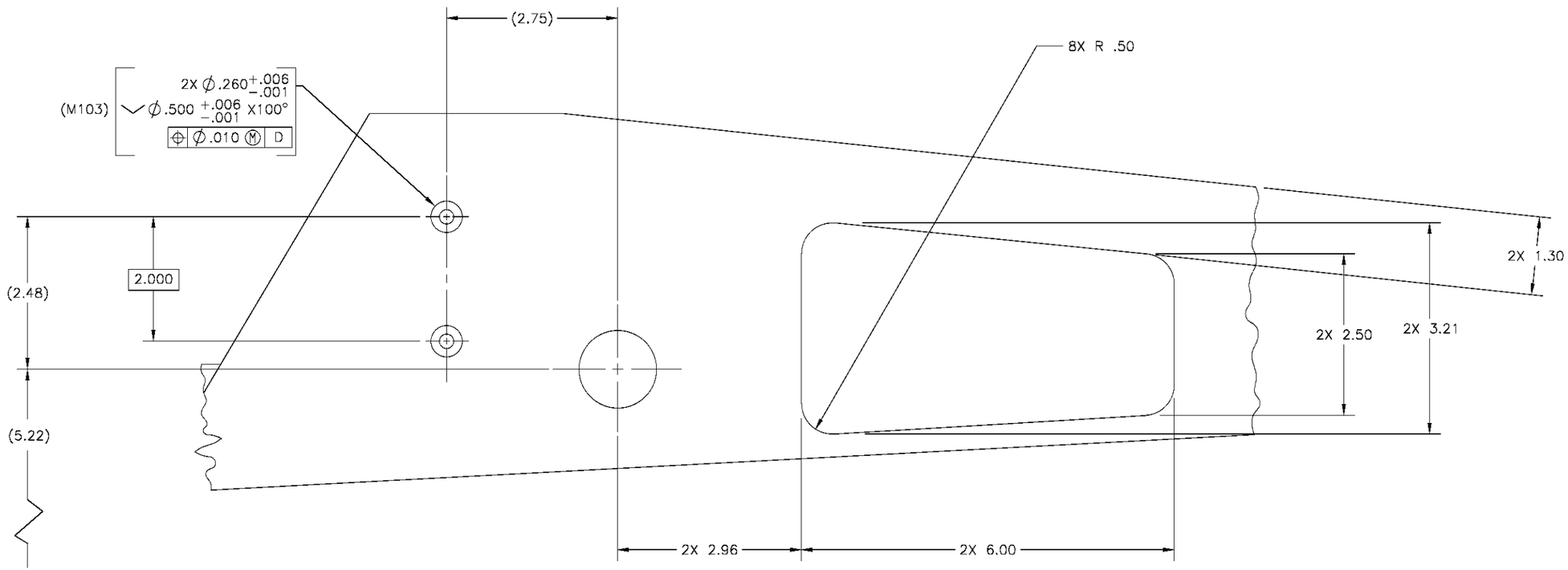

VIEW E–E
ROTATED 45° CCW
SCALE 1/1

CLASSIFICATION OF CHARACTERISTICS (DOD-STD-2101)

CRITICAL –
MAJOR –
MINOR –
} SEE SHEET 1

NEXT ASSY	LISTED ON	USED ON
APPLICATION		

UNLESS OTHERWISE SPECIFIED
DIMENSIONS ARE IN INCHES
TOLERANCES
ANGLES ± ———
.XX DECIMALS ± ———
.XXX DECIMALS ± ———
PART SHALL BE FREE OF BURRS
BROKEN EDGES ——— MAX
FILLETS ——— R MAX
SURFACE ROUGHNESS —√
INTERPRET DRAWING IN ACCORDANCE WITH MIL-STD-100 AND ASI Y14.5M-1982
DO NOT SCALE THIS DRAWING

PACIFIC MISSILE TEST CENTER
POINT MUGU, CALIF. 93042

PE	JHO	86/3/6
CM	DA	86/3/6
CHECKED	PSD	86/3/6
DRAWN	MRC	8/20/85

APPROVED FOR NAVAIRSYSCOM
BY DIRECTION

DEPARTMENT OF THE NAVY
NAVAL AIR SYSTEMS COMMAND
WASHINGTON, D.C. 20360

FIN

SIZE	CODE IDENT NO.	NAVAIRSYSCOM DWG NO.	REV
D	30003	923AS160	J
SCALE —	UNIT WT	SHEET 3	

923AS160

U.S. GOVERNMENT PRINTING OFFICE: 1983-584-686
SCANNED DRAWING NO. 91752
11NO.FMTC 3390 150 (REV 8-79)

REVISIONS				
SYMB	DESCRIPTION	BY	DATE	APPROVED
A	REPLACES REV – WITH CHANGE, SEE NOR 86B0008.20		86/3/7	PSD
B	SEE NOR 86B0039.16		87/3/5	LWF
C	SEE NOR 87B0117.21		88/4/20	LWF
D	SEE NOR 90B0021.4		900815	FAA
G	NOR 92BB052.25 92–09–20		920929	FAA

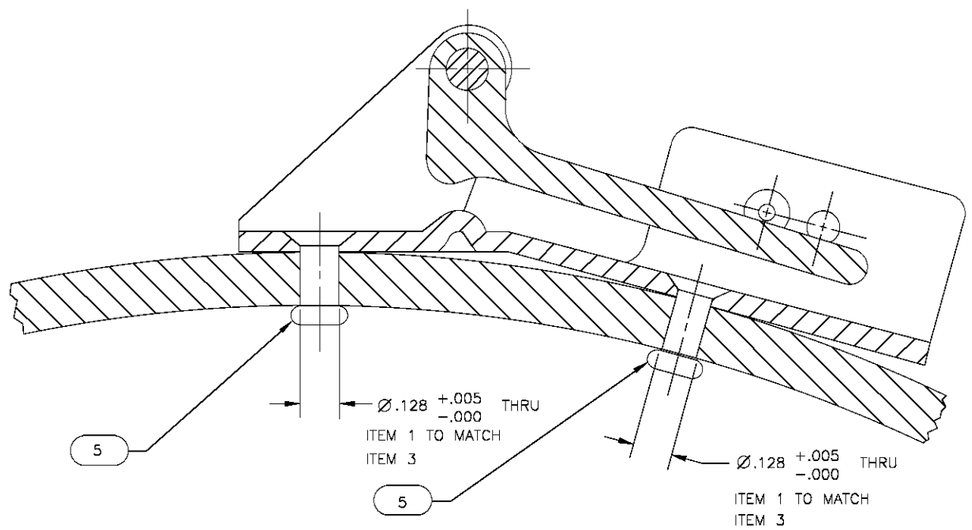

SECTION H–H
SCALE: 4/1

923AS162

CLASSIFICATION OF CHARACTERISTICS (DOD–STD–2101)

CRITICAL –
MAJOR – } SEE SHEET 1
MINOR –

NEXT ASSY	LISTED ON	USED ON
APPLICATION		

UNLESS OTHERWISE SPECIFIED
DIMENSIONS ARE IN INCHES
TOLERANCES
ANGLES ± ———
.XX DECIMALS ± ———
.XXX DECIMALS ± ———
PART SHALL BE FREE OF BURRS
BROKEN EDGES ——— MAX
FILLETS ——— R MAX
SURFACE ROUGHNESS ✓
INTERPRET DRAWING IN ACCORDANCE WITH STANDARDS PRESCRIBED IN MIL–STD–100
DO NOT SCALE THIS DRAWING

PACIFIC MISSILE TEST CENTER
POINT MUGU, CALIF.
93042

PE	JWD	86/3/6
CM	DA	86/3/6
CHECKED	PSD	86/3/6
DRAWN	MRC	8/20/85

APPROVED FOR NAVAIRSYSCOM
BY DIRECTION

DEPARTMENT OF THE NAVY
NAVAL AIR SYSTEMS COMMAND
WASHINGTON, D.C. 20360

FIN ASSEMBLY

SIZE	CODE IDENT NO.	NAVAIRSYSCOM DWG NO.	REV
D	30003	923AS162	G

SCALE ——— UNIT WT SHEET 4

U.S. GOVERNMENT PRINTING OFFICE: 1983–654–063
SCANNED DRAWING NO. 91752
11NO.FMTC 3390 150 (REV 8–79)