REVISIONS				
SYMB	DESCRIPTION	BY	DATE	APPROVED
F	SEE NOR 91B0012.19		910425	FAA
G	NOR 92BB052.24 92-09-20		920929	FAA
H	SEE NOR 01BB025.16		030109	YHJ
J	SEE NOR 03BB002-05		030327	YHJ
K	SEE NOR 04BB002-20		040428	YHJ

REVISIONS				
SYMB	DESCRIPTION	BY	DATE	APPROVED
B	REPLACES REV A WITH CHANGE, SEE NOR 86B0008.19		86/3/7	PSD
C	SEE NOR 86B0039.15		87/3/5	LWF
D	SEE NOR 0675-E-0002.1		87/9/23	PSD
E	SEE NOR 87B0117.20		88/4/20	LWF

NOTES:

1. FINISH:
   A. APPLY CHEMICAL CONVERSION COATING TO ITEM 1 IN ACCORDANCE WITH MIL-C-5541, CLASS 1A.
   B. APPLY ONE COAT OF ALKYD BASE PRIMER, ITEM 6, TO A DRY FILM THICKNESS OF .0006-.0009.
   C. APPLY ONE COAT OF ENAMEL ITEM 7 TO A TOTAL DRY FILM THICKNESS OF .0009-.0012. COLOR TO BE TACTICAL GRAY, COLOR NO.36375 OF FED-STD-595.
   D. TOUCH-UP ANY AREAS WHERE PRIMER AND PAINT ARE DAMAGED AFTER RIVETING WITH ITEMS 6 AND 7.
   E. FINISH DOES NOT APPLY TO FIN SPRING, ITEM 2 AND FIN WEDGE, ITEM 3.
2. INSTALL ITEM 2 WITH RIVETS, ITEM 4, IN ACCORDANCE WITH NASM 47196 AFTER FINISHING.

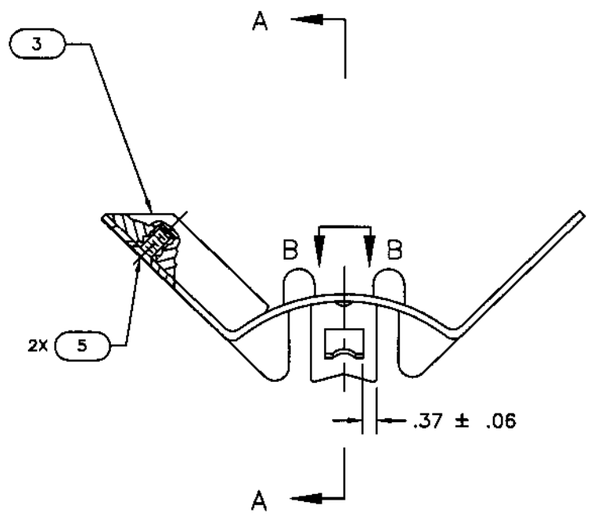

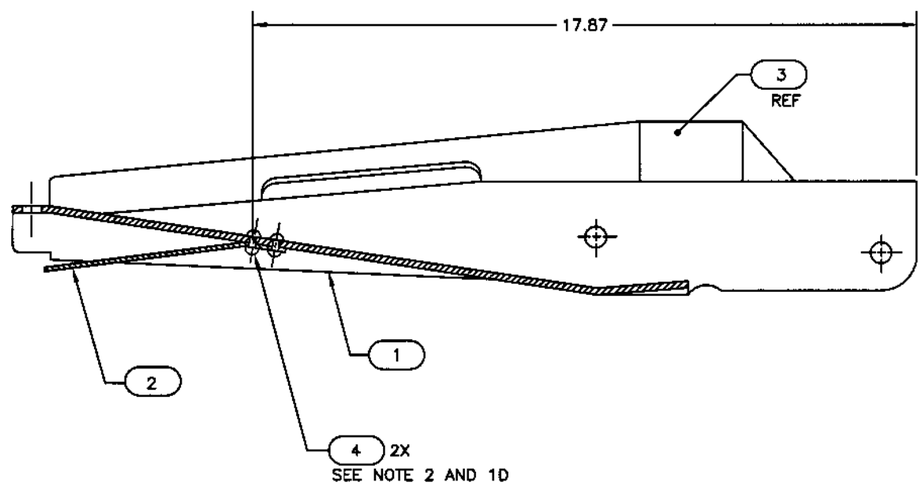

SECTION A-A

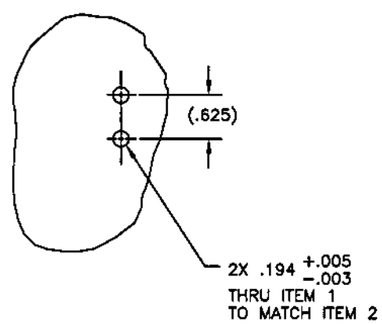

VIEW B-B
SCALE 1/1
ROTATED 90°
ITEM 4 AND 2 REMOVED FOR CLARITY

QTY REQD	NOMENCLATURE OR DESCRIPTION	CODE IDENT NO.	PART OR IDENTIFYING NO.	SPECIFICATION	ITEM NO.
AR	ENAMEL, LUSTRELESS			MIL-E-11195	7
AR	PRIMER COATING, ALKYD BASE, ONE COMPONENT		TYPE II CLASS C, COLOR Y	TT-P-1757	6
2	SCREW, SELF LOCKING, 100° FLAT HEAD		MS21093-456	NASM 21093	5
2	RIVET		MS20613-6C8	NASM 20613	4
1	WEDGE, FIN		923AS163		3
1	SPRING, FIN		1561419		2
1	FIN		923AS160		1

CUSTOM SHEETS FOR PARTS LIST (1WG-FSR-3008/100 (11-72))

PARTS LIST

923AS346		BSU-86A/B
923AS159	DL923AS159	BSU-86/B
NEXT ASSY	LISTED ON	USED ON

APPLICATION

UNLESS OTHERWISE SPECIFIED
DIMENSIONS ARE IN INCHES
TOLERANCES
ANGLES ± ———
.XX DECIMALS ± .03
.XXX DECIMALS ± .015
PART SHALL BE FREE OF BURRS
BROKEN EDGES ——— MAX
FILLETS ——— R MAX
SURFACE ROUGHNESS —✓
INTERPRET DRAWING IN ACCORDANCE WITH STANDARDS PRESCRIBED IN MIL-STD-100
DO NOT SCALE THIS DRAWING

PACIFIC MISSILE TEST CENTER
POINT MUGU, CALIF.
93042

PE	JHD	86/3/6
CM	RA	86/3/6
CHECKED	PSD	86/3/6
DRAWN	MRC	8/20/85

APPROVED FOR NAVAIRSYSCOM
J.F. PHILLIPS 86/3/6
BY DIRECTION

DEPARTMENT OF THE NAVY
NAVAL AIR SYSTEMS COMMAND
WASHINGTON, D.C. 20360

FIN ASSEMBLY

SIZE	CODE IDENT NO.	NAVAIRSYSCOM DWG NO.	REV
D	30003	923AS161	K

SCALE 1/2 | UNIT WT | SHEET 1 OF 1

923AS161

Distribution Statement B. Distribution authorized to the DOD and DOD Contractors only because export of the data is restricted (determination 25 APR 91). Other requests shall be referred to Naval Air Warfare Center Weapons Division (PD56D), Point Mugu, CA 93042

WARNING - This document contains technical data whose export is restricted by the Arms Export Control Act (Title 22, U.S.C. Sec 2751 et seq) or the export Administration Act of 1979, as amended (Title 50, U.S.C., APP 2401 et seq). Violations of these export laws are subject to severe criminal penalties. Disseminate in accordance with provisions of DOD Directive 5230.24.

DESTRUCTION NOTICE - When this data is no longer needed, destroy it by any means, which will prevent disclosure of contents or reconstruction of the document.

CLASSIFICATION OF CHARACTERISTICS (DOD-STD-2101)

CRITICAL - NONE
MAJOR - NONE
MINOR - NONE