NOTICE OF REVISION (NOR)

This revision described below has been authorized for the document listed.

1. DATE (YYMMDD): 040311

Form Approved OMB No. 0704-188

Public reporting burden for this collection of information is estimated to average 2 hours per response, including the time for reviewing instructions, searching existing data sources, gathering and maintaining the data needed, and completing and reviewing the collection of information. Send comments regarding this burden estimate or any other aspect of this collection of information, including suggestions for reducing this burden, to Department of Defense, Washington Headquarters Services, Directorate for Information Operations and Reports, 1215 Jefferson Davis Highway, Suite 1204, Arlington, VA 22202-4302, and to the Office of Management and Budget, Paperwork Reduction Project (0704-0188), Washington, DC 20503.
PLEASE DO NOT RETURN YOUR COMPLETED FORM TO EITHER OF THESE ADDRESSES. RETURN COMPLETED FORM TO THE GOVERNMENT ISSUING CONTRACTING OFFICER FOR THE CONTRACT/PROCURING ACTIVITY NUMBER LISTED IN ITEM 2 OF THIS FORM.

2. PROCURING ACTIVITY NO.

3. DODAAC: N63126

4. ORIGINATOR
a. TYPED NAME (First, Middle Initial, Last): YVETTE JONES
b. ADDRESS (Street, City, State, Zip Code): NAWCWD, 575 I AVENUE, SUITE 1, POINT MUGU, CA 93042-5049

5. CAGE CODE: 13672

6. NOR NO.: 03BB020-01

7. CAGE CODE: 30003

8. DOCUMENT NO.: 923AS160

9. TITLE OF DOCUMENT: FIN

10. REVISION LETTER
a. CURRENT: L
b. NEW:

11. ECP NO.: 03BB020

12. CONFIGURATION ITEM (OR SYSTEM) TO WHICH ECP APPLIES: BSU-86 A/B FIN ASSEMBLY

13. DESCRIPTION OF REVISION

SHEET 1

1. IN NOTES, ADD THE FOLLOWING NOTE:

   8. THE .125 PROFILE TOLERANCE APPLIES TO THE INDICATED AREA.

2. IN NOTES, ADD THE FOLLOWING NOTE:

   9. ALL TRANSITIONS BETWEEN PROFILE TOLERANCE ZONES MUST BE SMOOTH.

SHEET 2

3. IN ZONE B/1-2, DELETE THE FOLLOWING FROM VIEW D-D:

(M106)
2X | ⌓ | .180 | A | B Ⓢ |

14. THIS SECTION FOR GOVERNMENT USE ONLY

a. (X one)
- [X] (1) Existing document supplemented by this NOR may be used in manufacture.
- [ ] (2) Revised document must be received before manufacturer may incorporate this change.
- [ ] (3) Custodian of master document shall make above revision and furnish revised document.

b. ACTIVITY AUTHORIZED TO APPROVE CHANGE FOR GOVERNMENT: NAVAIRWARCEN, PT. MUGU, CA 93042-5049

c. TYPED NAME (First, Middle Initial, Last): FRANK McELFISH

d. TITLE: CAPT. DAVE RINDAWAY, USN (FOR) ~~APM (S&E)~~

e. SIGNATURE: Frank McElfish PMA-201A

f. DATE SIGNED (YYMMDD): 040921

15.a. ACTIVITY ACCOMPLISHING REVISION: NAVAIRWARCEN, PT. MUGU, CA 93042-5049

b. REVISION COMPLETED (Signature):

c. DATE SIGNED (YYMMDD):

TITLE OF DOCUMENT

FIN

DESCRIPTION (CONT.)

SHEET 2 (CONT)

4. IN ZONES A-C/1-4, CHANGE DIMENSIONS IN VIEWS D-D:

FROM:

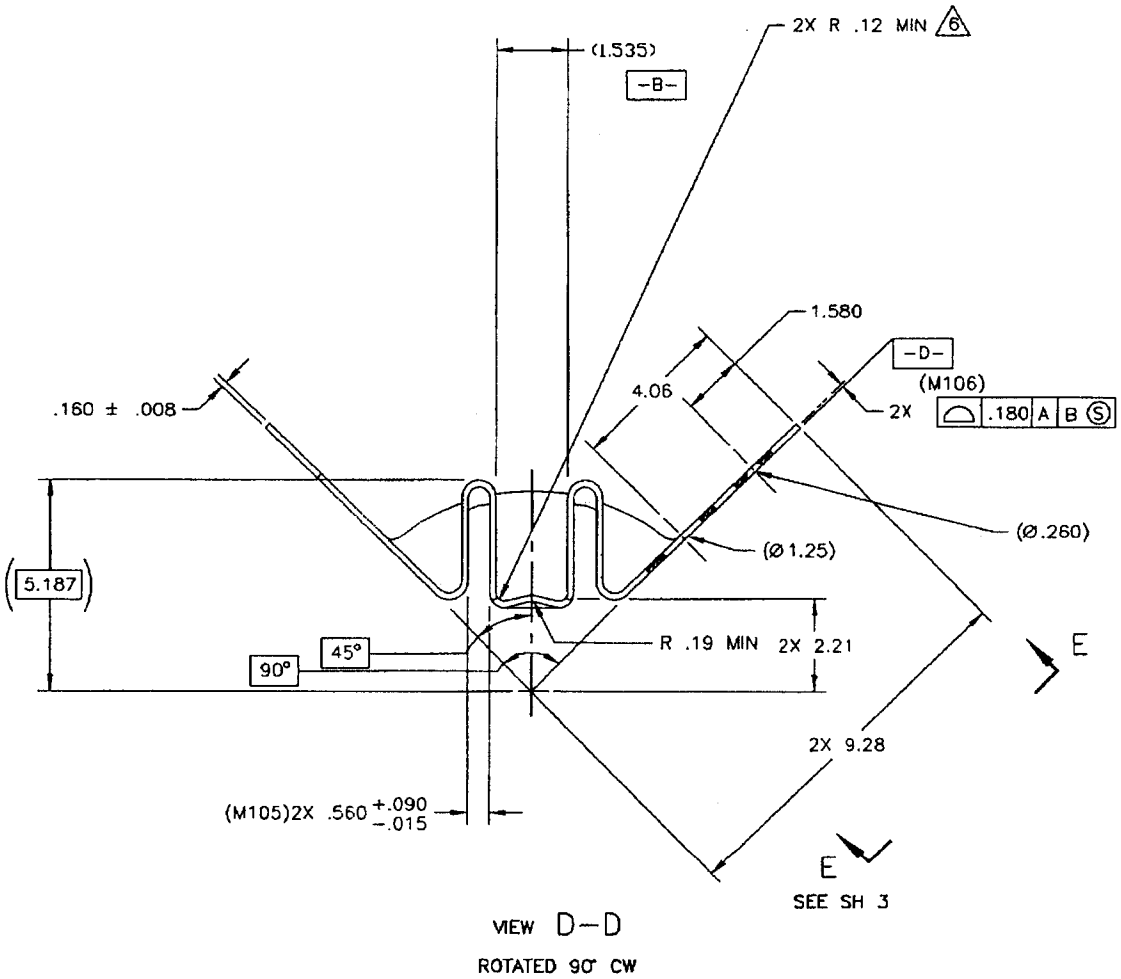

TITLE OF DOCUMENT

FIN

DESCRIPTION (CONT.)

SHEET 2 (CONT)

TO:

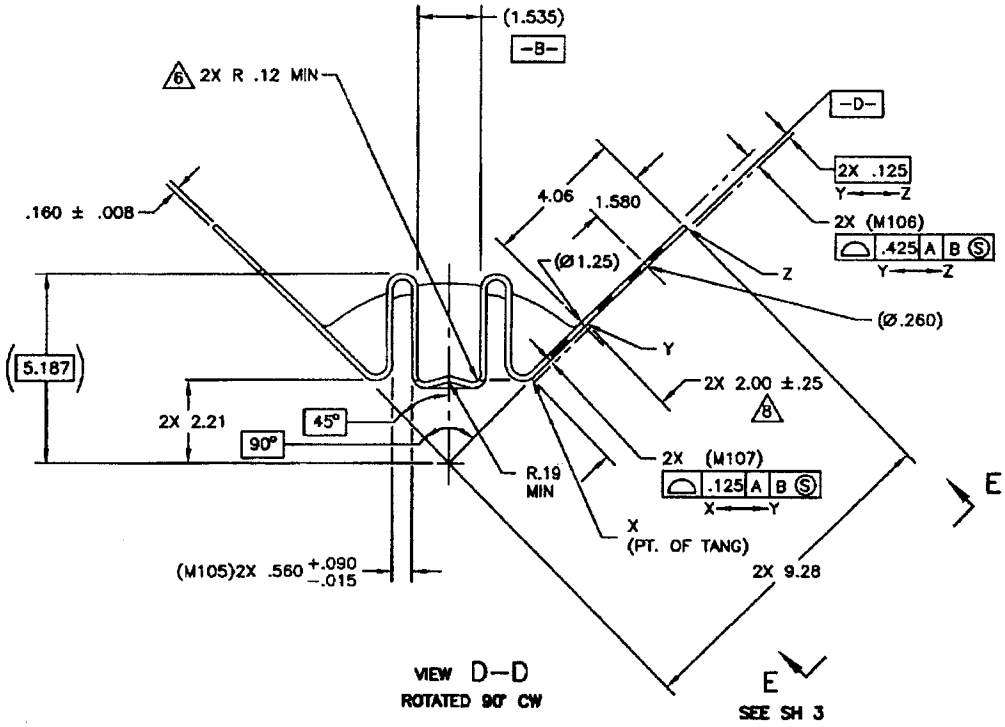

TITLE OF DOCUMENT

FIN

DESCRIPTION (CONT.)

SHEET 3

5. IN ZONES B-C/6-7, CHANGE VIEW E-E:

FROM:

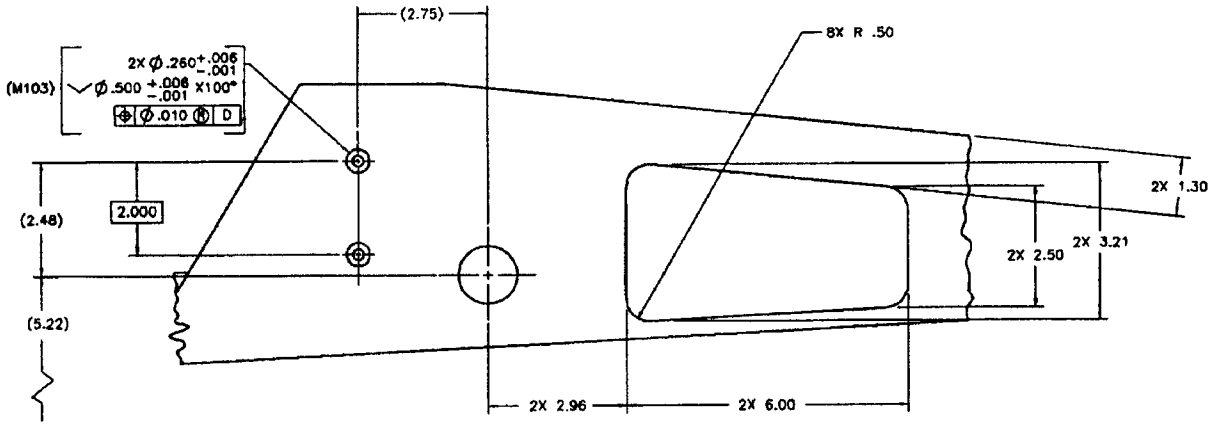

VIEW E–E
ROTATED 45° CCW
SCALE 1/1

TO:

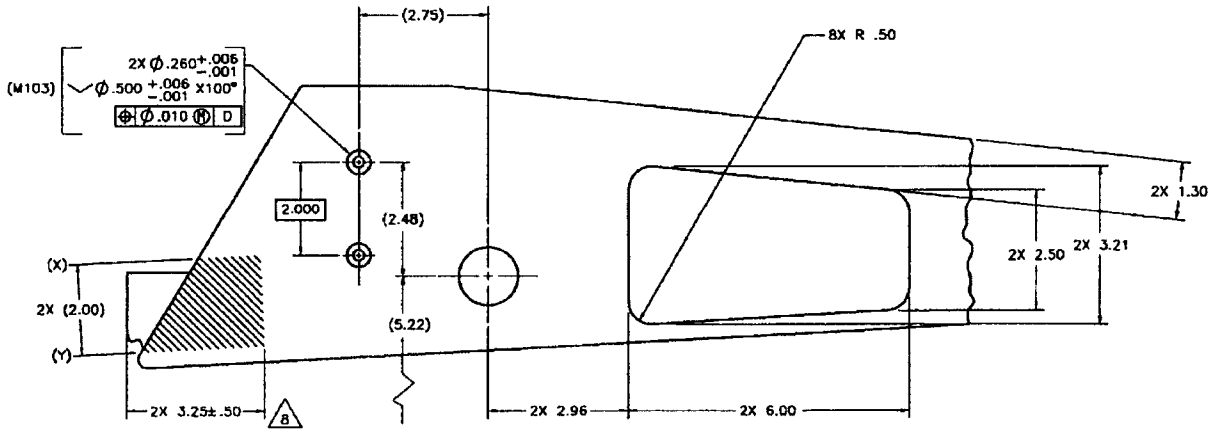

VIEW E–E
ROTATED 45° CCW
SCALE 1/1

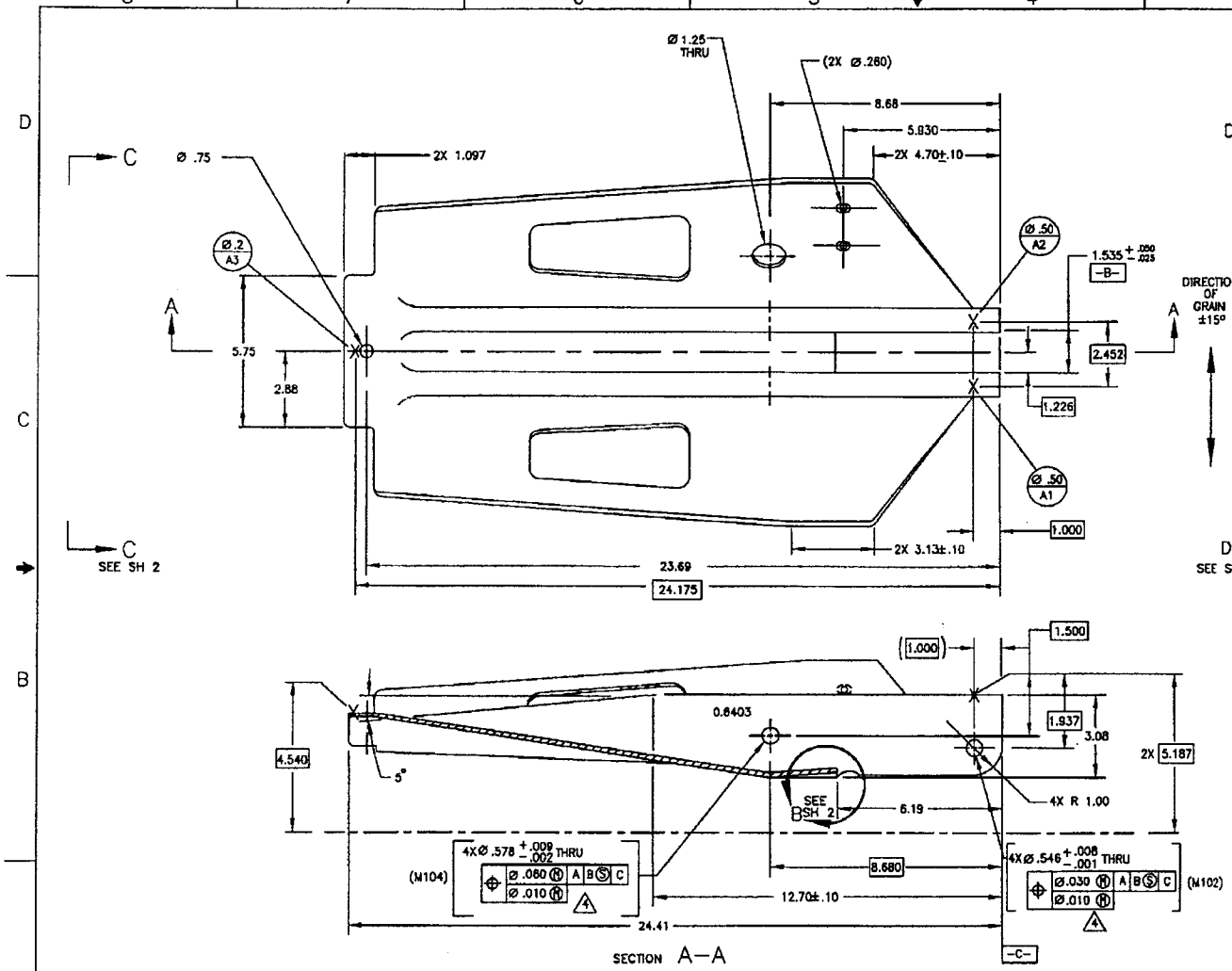

REVISIONS				
SYMB	DESCRIPTION	BY	DATE	APPROVED
A	REPLACES REV- WITH CHANGE, SEE NOR 86B0008.18		86/3/7	PSD
B	SEE NOR 86B0039.14		87/3/5	LWF
C	SEE NOR 87B0117.19		88/4/20	LWF
D	SEE NOR 88B059.5		88/6/17	LWF
E	SEE NOR 88B0082.3		88/11/15	FAA
F	SEE NOR 88B0121.8		84/2/9	LWF
G	SEE NOR 91B0012.18		910425	FAA
H	NOR 92BB052.23 92-08-20		920929	FAA
J	NOR 94BB043.1		94/12/19	HR
K	SEE NOR 01BB025.15		030109	YHJ
L	SEE NOR 04BB002-06		040428	YHJ

NOTES:

1. MATERIAL: ALUMINUM ALLOY, SHEET, 7075-0 IN ACCORDANCE WITH ASTM B209.

(M101) 2. HEAT TREAT TO T6 TEMPER IN ACCORDANCE WITH SAE-AMS-H-6088, AFTER FORMING.

3. UNLESS OTHERWISE SPECIFIED, RADII SHALL BE AS FOLLOWS:
   A. OUTSIDE CORNER RADII. 28
   B. INSIDE CORNER RADII. 16
   C. BEND RADII. 28

4. BROKEN EDGES ON Ø.546 AND Ø.578 HOLES SHALL BE .005 MAXIMUM.

5. INDICATED SURFACES SHALL BE FREE FROM CRACKS, GOUGES, AND SHARP INDENTATIONS.

6. THE R .12 MINIMUM DIMENSION SHOWN IN VIEW D-D APPLIES ONLY TO ZONE W OF VIEW B.

7. THE R .28 SHALL BE HELD FOR A DISTANCE OF 2.750 FROM FORWARD END AND A DISTANCE OF 7.000 FROM AFT END. THE REMAINING DISTANCE SHALL BE R .28 MINIMUM TO R .50 MAXIMUM.

923AS160

CLASSIFICATION OF CHARACTERISTICS (DOD-STD-2101)

CRITICAL - NONE
MAJOR - 6
MINOR - 1

L	J	J
K	J	J
J	J	J
SHEET 1	SHEET 2	SHEET 3

REVISION STATUS OF SHEETS

Distribution Statement A Distribution authorized to the DOD and DOD Contractors only because report of the data is restricted (determination 22 AUG 90). Other requests shall be referred to Naval Air Warfare Center Weapons Division China Lake, China Lake CA 93555.

WARNING - This document contains technical data whose export is restricted by the Arms Export Control Act (Title 22, U.S.C., Sec. 2751 et seq.) or the export Administration Act of 1979, as amended (Title 50, U.S.C., App. 2401 et seq.). Violations of these export laws are subject to severe criminal penalties. Disseminate in accordance with provisions of DOD Directive 5230.25.

DESTRUCTION NOTICE - When this data is no longer needed, destroy it by any means, which will prevent disclosure of contents or reconstruction of the document.

923AS162		BSU-86A/B
923AS161		BSU-86A/B
923AS162	DL923AS159	BSU-86/B
923AS161	DL923AS159	BSU-86/B
NEXT ASSY	LISTED ON	USED ON
APPLICATION		

UNLESS OTHERWISE SPECIFIED
DIMENSIONS ARE IN INCHES
TOLERANCES
ANGLES ± 2°
.XX DECIMALS ± .03
.XXX DECIMALS ± .013
PART SHALL BE FREE OF BURRS
BROKEN EDGES .000 MAX
FILLETS ——— R MAX
SURFACE ROUGHNESS 250√
INTERPRET DRAWING IN ACCORDANCE WITH MIL-STD-100 AND ANSY Y14.5M-1982
DO NOT SCALE THIS DRAWING

PACIFIC MISSILE TEST CENTER
POINT MUGU, CALIF. 93042

PE	JHD	86/3/4
DN	WA	86/3/4
CHECKED	PRD	86/3/4
DRAWN	WRC	6/16/86

APPROVED FOR NAVAIRSYSCOM
JF PHILLIPS
BY DIRECTION 86/3/6

DEPARTMENT OF THE NAVY
NAVAL AIR SYSTEMS COMMAND
WASHINGTON, D.C. 20360

FIN

SIZE	CODE IDENT NO.	NAVAIRSYSCOM DWG NO.	REV
D	30003	923AS160	L
SCALE 1/2	UNIT WT	SHEET 1 OF 3	

REVISIONS				
SYMB	DESCRIPTION	BY	DATE	APPROVED
A	REPLACES REV- WITH- CHANGE SEE NOR 86B0008.18		86/3/7	PSD
B	SEE NOR 86B0039.14		87/3/5	LWF
C	SEE NOR 87B0117.19		88/4/20	LWF
D	SEE NOR 88B0121.5		89/2/9	LWF
G	SEE NOR 91B0012.18		910425	FAA
H	NOR 92BB052.23 92-09-20		920929	FAA
J	NOR 94BB043.1		941219	HRJ

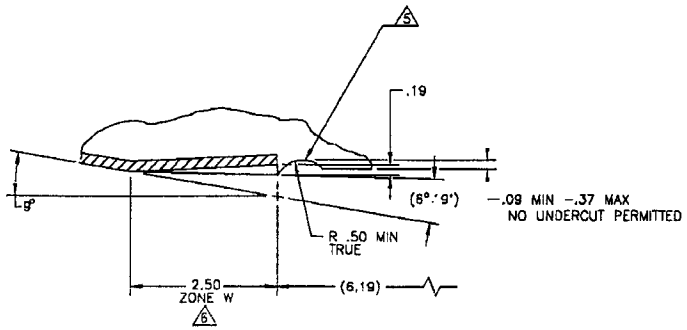

VIEW B
SCALE: 1/1

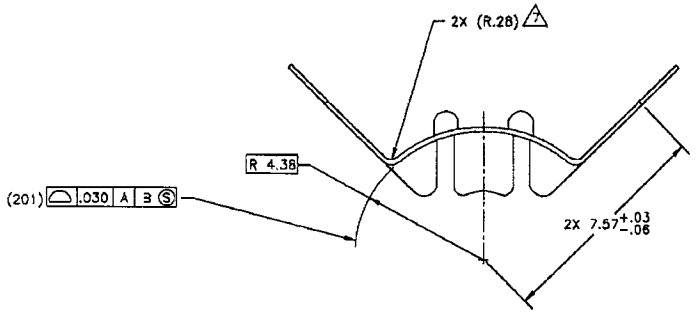

VIEW C-C
ROTATED 90° CCW

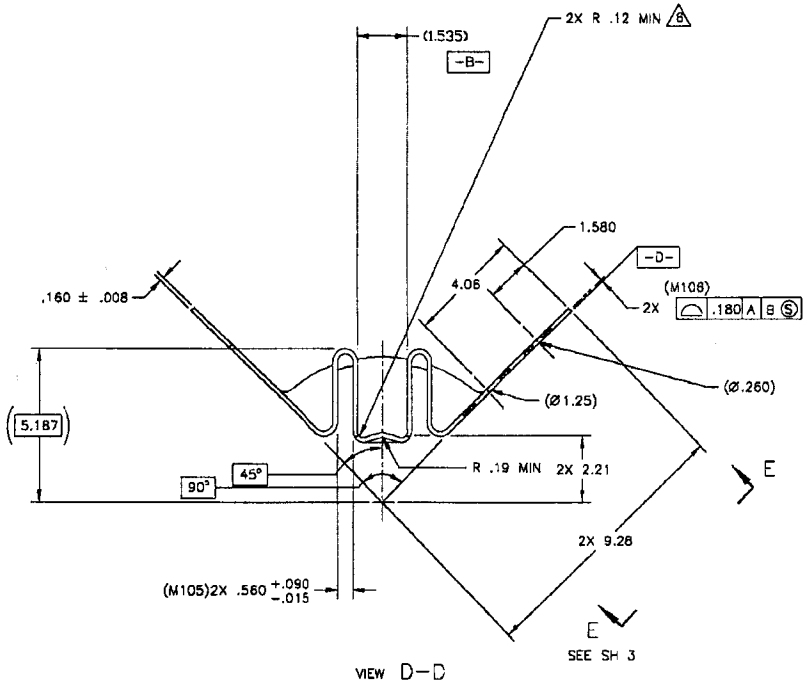

VIEW D-D
ROTATED 90° CW

CLASSIFICATION OF CHARACTERISTICS (DOD-STD-2101)

CRITICAL -
MAJOR -
MINOR -
} SEE SHEET 1

NEXT ASSY	LISTED ON	USED ON
APPLICATION		

UNLESS OTHERWISE SPECIFIED
DIMENSIONS ARE IN INCHES
TOLERANCES
ANGLES ±
.XX DECIMALS ±
.XXX DECIMALS ±
PART SHALL BE FREE OF BURRS
BROKEN EDGES MAX
FILLETS R MAX
SURFACE ROUGHNESS
INTERPRET DRAWING IN ACCORDANCE WITH MIL-STD-100 AND ANSI Y14.5M-1982
DO NOT SCALE THIS DRAWING

PACIFIC MISSILE TEST CENTER
POINT MUGU, CALIF. 93042

PE	JHD	88/3/8
CM	DA	88/3/8
CHECKED	PSD	88/3/8
DRAWN	MRC	8/13/85

APPROVED FOR NAVAIRSYSCOM
BY DIRECTION

DEPARTMENT OF THE NAVY
NAVAL AIR SYSTEMS COMMAND
WASHINGTON, D.C. 20360

FIN

SIZE	CODE IDENT NO.	NAVAIRSYSCOM DWG NO.	REV
D	30003	923AS160	J

SCALE — | UNIT WT | SHEET 2 OF

923AS160

REVISIONS				
SYMB	DESCRIPTION	BY	DATE	APPROVED
A	REPLACES REV – WITH CHANGE SEE NOR 86B0008.18		86/3/7	PSD
B	SEE NOR 86B0039.14		86/3/5	LWF
C	SEE NOR 87B0117.19		88/4/20	LWF
G	SEE NOR 91B0012.18		910425	FAA
H	NOR 92BB052.23 92-09-20		920929	FAA
J	NOR 94BB043.[illegible]		941219	HR

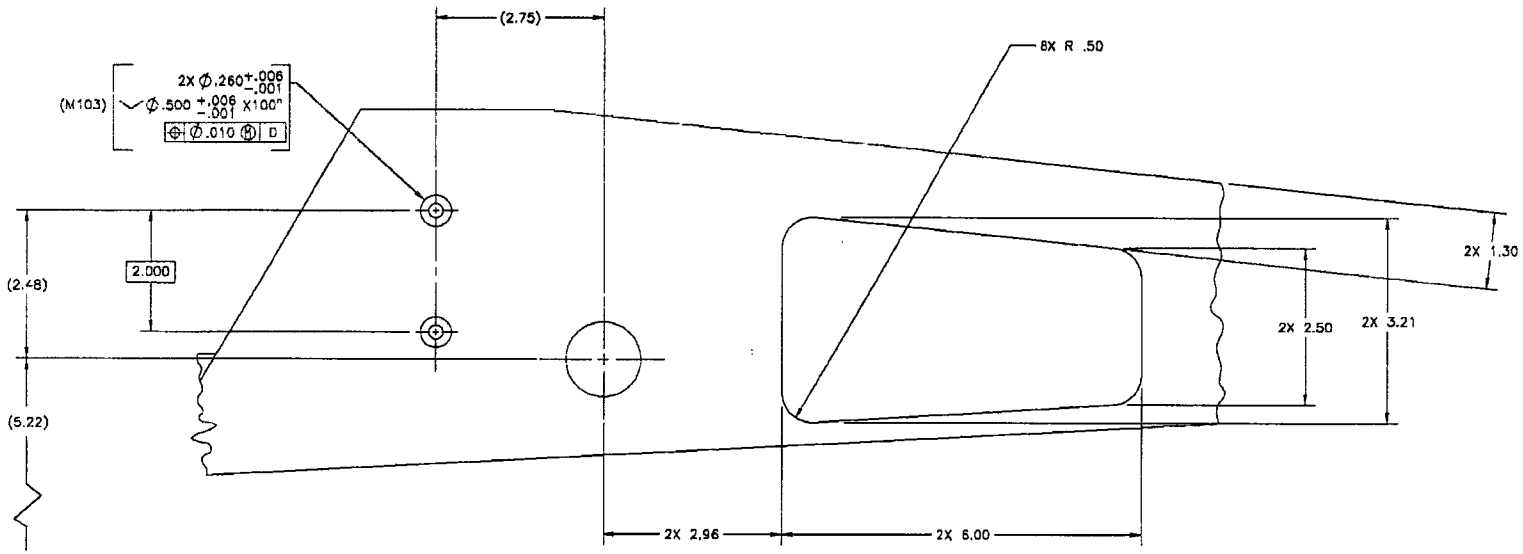

VIEW E–E
ROTATED 45° CCW
SCALE 1/1

CLASSIFICATION OF CHARACTERISTICS (DOD-STD-2101)

CRITICAL –
MAJOR –
MINOR –
} SEE SHEET 1

NEXT ASSY	LISTED ON	USED ON
APPLICATION		

UNLESS OTHERWISE SPECIFIED
DIMENSIONS ARE IN INCHES
TOLERANCES
ANGLES ±
.XX DECIMALS ±
.XXX DECIMALS ±
PART SHALL BE FREE OF BURRS
BROKEN EDGES MAX
FILLETS R MAX
SURFACE ROUGHNESS
INTERPRET DRAWING IN ACCORDANCE WITH MIL-STD-100 AND ASI Y14.5M-1982
DO NOT SCALE THIS DRAWING

PACIFIC MISSILE TEST CENTER
POINT MUGU, CALIF. 93042

PE	JHO	86/3/6
CM	DA	86/3/6
CHECKED	PSD	86/3/6
DRAWN	MRC	8/20/85

APPROVED FOR NAVAIRSYSCOM
BY DIRECTION

DEPARTMENT OF THE NAVY
NAVAL AIR SYSTEMS COMMAND
WASHINGTON, D.C. 20360

FIN

SIZE	CODE IDENT NO.	NAVAIRSYSCOM DWG NO.	REV
D	30003	923AS160	J

SCALE — UNIT IN' SHEET 3

923AS160