S	NOR 7600060-4/01-23-76	02-11-76	
T	NDRA9K2527/79-11-02	79-11-16	

REVISIONS			
SYM	DESCRIPTION	DATE	APPROVAL
N	← →	8-9-65	
N	EOPA47395/9-21-67	9-21-67	
P	NOR73008843-4/08-16-73	10-05-73	
R	NOR73010026-4/08-22-73	12-06-74	

GENERAL MARKING INSTRUCTIONS

A- LETTER SIZE:
(1) BASIC SIZES OF STENCILED LETTERING SHALL BE 1/4 INCH AND 1/2 INCH DEPENDENT UPON CONTAINER SIZES LISTED BELOW.
CONTAINERS UP TO AND INCLUDING 7. GAL. 1/4 INCH ± 1/32 INCH
CONTAINERS OVER 7. GAL. (REF MIL-D-6054) 1/2 INCH ± 1/16 INCH
(2) THE SIZES AND SPACING OF LETTER BLOCKS ARE FOR STANDARD CUT STENCIL LETTERING. DEVIATIONS IN SIZE OF LETTERS AND FIGURES WILL BE PERMITTED WHEN SIZE OF CONTAINERS IS SUCH THAT THE SIZE SPECIFIED IS NOT APPLICABLE. WHEN NECESSARY TO DEVIATE FROM DESIRED SIZE THE LETTERS AND FIGURES SHALL BE APPROXIMATELY PROPORTIONAL TO THE SIZES LISTED.

B- ABBREVIATIONS
(1) ABBREVIATIONS OTHER THAN SHOWN ON DIAGRAM SHALL CONFORM TO MIL-STD-12 AND SHALL BE USED ONLY WHEN SPACE DOES NOT PERMIT COMPLETE SPELLING OF THE WORD. WHEN THE WORD IS NOT CONTAINED IN THE STANDARD, APPROVAL OF ABBREVIATION MUST BE OBTAINED FROM THE CONTRACTING OFFICER.
(2) REQUIRED DOT MARKING SHALL NOT BE ABBREVIATED.

C- CONTAINER COLOR, MARKING:
CONTAINERS SHALL BE RETOUCHED WHERE PREVIOUS COATING IS DAMAGED WITH OLIVE DRAB NO. X34087 ENAMEL, SPECIFICATION TT-E-485 OR TT-E-516. ALL MARKING SHALL BE WHITE NO. 37875 ENAMEL, SPECIFICATION TT-E-516 OR WHITE NO. 37875 STENCIL INK, TYPE I OR III, SPECIFICATION MIL-I-1795.

D- POSITION OF MARKING:
(1) RELATIVE POSITION OF MARKING SHALL BE AS SHOWN. WHEN SPACE IS LIMITED OR OBSTRUCTED, MARKING MAY BE ADJUSTED AS REQUIRED.
(2) THE DOT MARKING MAY BE OMITTED FROM THE TOP OF CONTAINERS WITH DIAMETER OF 10. INCHES OR LESS.

E- POSITION PLUGS OR WINDOWS:
(1) WHEN CONTAINERS HAVE HUMIDITY INDICATOR PLUGS OR OBSERVATION WINDOWS ON SIDE, MARKING SHALL BE POSITIONED TO THE LEFT OF THE PLUG OR WINDOW AS SHOWN.

F- WHEN SPECIFIED, APPLY FOUR (4) 2.INCH SQUARE PATCHES (AS SHOWN), USING MATERIAL LISTED IN TABLE OF COLOR CODE FOR PATCHES.

SEALING INSTRUCTIONS

ATTACH METALLIC SEAL IN ACCORDANCE WITH FIGURE I OR FIGURE II AS APPLICABLE SO THAT THE COVER CANNOT BE REMOVED WITHOUT DESTROYING THE SEAL. USE SEALING TOOL IN ACCORDANCE WITH DRAWING F8794342. CONTAINERS OF OTHER DESIGN SHALL BE SEALED IN ACCORDANCE WITH INSTRUCTIONS ON APPLICABLE ASSEMBLY DRAWING.

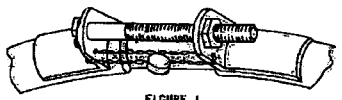

FIGURE I
WIRE METALLIC SEAL FOR 5. -INCH THROUGH 8.5-INCH DRUM-TYPE CONTAINERS.

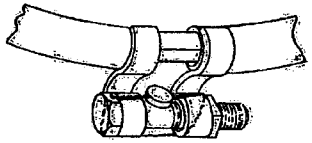

FIGURE II
WIRE METALLIC SEAL FOR DRUM-TYPE CONTAINERS WITH DRILLED-HEAD CLOSURE BOLTS.

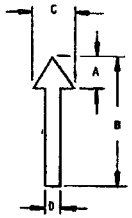

SIZE OF LETTERS AND FIGURES ON CONTAINER	ARROW SIZE			
	A	B	C	D
1/4	1/2 ±1/8	2. ± 1/4	3/4 ±1/8	1/4 ±1/8
1/2	3/4 ±1/8	3. ±1/4	1. ± 1/8	3/8 ±1/8

MULTIPLE COLOR CODE PATCHES

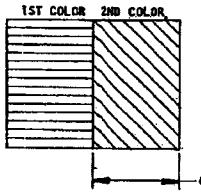

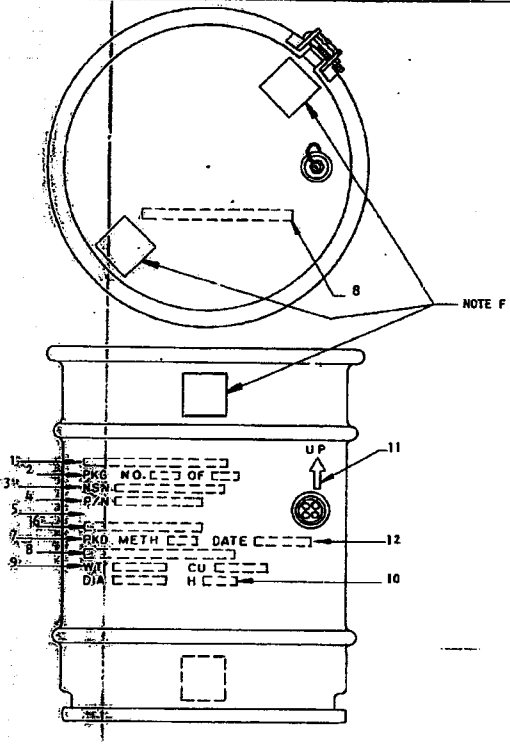

NOTES:-
1- INSERT UNCLASSIFIED DESCRIPTIVE NOMENCLATURE, MODEL NUMBER AND QUANTITY.
2- INSERT PACKAGE NUMBER.
3- INSERT NATIONAL STOCK NUMBER.
4- INSERT PART NUMBER.
5- SPACE FOR ONE LINE OF REWORK MARKING.
6- INSERT SERIAL NUMBER (SER NO.) OR SERIAL AND LOT NUMBERS (SER NO. LOT NO.) OR LOT NUMBER (LOT NO.) AS APPLICABLE. (SEE MIL-STD-116B)
7- INSERT METHOD OF PACK USING ARABIC NUMERALS.
8- INSERT DOT MARKING AS INDICATED ON CONTAINER DRAWING.
9- THE WEIGHT STENCILLED ON THE CONTAINER IS AN APPROXIMATE WEIGHT USED FOR SHIPPING PURPOSES ONLY. INSERT CUBICAL DISPLACEMENT TO THE NEAREST 1/10 CUBIC FOOT.
10- INSERT OVERALL DIMENSIONS OF CONTAINER WITH FRACTION OF AN INCH RECORDED TO THE NEXT HIGHER DECIMAL HALF INCH.
11- WHEN ORIENTATION ARROWS ARE SPECIFIED BY CONTAINER DRAWING, ONE ARROW SHALL BE LOCATED AS SHOWN WITH THE WORD "UP" SHOWN ABOVE IN 1. INCH LETTERS. THIS MARKING SHALL BE REPEATED 180° AROUND THE CIRCUMFERENCE OF THE CONTAINER.
12- OMIT DATE PACKED UNLESS SPECIFICALLY REQUIRED BY PACKING DRAWING.

TESTING INSTRUCTIONS

ALL CONTAINERS SHALL BE TESTED FOR LEAKAGE BY ONE OF THE FOLLOWING METHODS:-

PRESSURE RETENTION TEST — THE CONTAINER SHALL WITHSTAND AN INTERNAL AIR PRESSURE OF 1.75 ± .25 PSI GAGE WITH A LEAKAGE RATE NOT TO EXCEED .05 PSI GAGE FOR 10. MINUTES MIN.

QUICK LEAK TEST — THE CONTAINER SHALL NOT LEAK WHEN SUBJECTED TO AN INTERNAL AIR PRESSURE OF 1.75 ± .25 PSI GAGE AND IMMERSED IN WATER. THE PRESENCE OF A RECURRING STREAM OF BUBBLES SHALL CONSTITUTE LEAKAGE.

T	T
SH 2	SH 1
REVISION STATUS BLOCK	

CLOSING INSTRUCTIONS FOR LOCKING RING CONTAINERS

ASSEMBLE GASKET AND HEAD ON THE CONTAINER. COVER THE INSIDE OF THE LOCKING RING WITH A FILM OF GENERAL-PURPOSE LUBRICATING OIL AND INSTALL THE LOCKING RING ON THE CONTAINER. INSERT BOLT THROUGH LUGS OF LOCKING RING. APPLY NUT AND PARTIALLY TIGHTEN RING TO INSURE THAT ALL PARTS ARE PROPERLY POSITIONED. STARTING 180° FROM BOLT LUGS, AND WORKING BOTH WAYS TO THE LUGS, REPEATEDLY TAP THE PERIPHERY OF THE RING WITH FIBER, RUBBER OR PLASTIC MALLET. CONTINUE TAPPING AND TIGHTENING UNTIL THE TAPPING CEASES TO PRODUCE SLACK AT THE LOCKING RING BOLT. TIGHTEN THE NUT AS FOLLOWS USING A TORQUE WRENCH AND SCREWDRIVER: ON INTERIOR CONTAINERS (DWG. F8860900) THE NUT SHALL BE TIGHTENED TO A TORQUE OF 4 FOOT POUNDS PLUS OR MINUS 1/2 FOOT POUND; ON EXTERIOR CONTAINERS THE NUT SHALL BE TIGHTENED TO A TORQUE OF 5 FOOT POUNDS PLUS OR MINUS 1 FOOT POUND. NO ATTEMPT SHOULD BE MADE TO BRING THE LUGS SNUGLY TOGETHER. COVER ALL EXPOSED BOLT THREADS THAT HAVE PASSED THROUGH THE NUT WITH A THIN FILM OF CORROSION PREVENTIVE COMPOUND.

CLOSING INSTRUCTIONS FOR TWIST LOCK CONTAINERS

APPLY THIN COATING OF MOLYBDENUM SULFIDE LUBRICANT TO RUBBER GASKET. PLACE COVER ON CONTAINER SO THAT THE SEALING LUG ON THE COVER AND THE SEALING TAB ON THE CONTAINER WILL BE IN LINE, OR NEARLY SO, WHEN THE CONTAINER IS CLOSED. TWIST COVER IN DIRECTION INDICATED FOR CLOSING. TIGHTEN COVER BY STRIKING SEALING LUG ON COVER (IN DIRECTION INDICATED FOR CLOSING) WITH A 1 1/2 TO 2 POUND HAMMER UNTIL COVER IS TIGHT.

CODE IDENT NO. 19200	U S ARMY ARMAMENT RESEARCH AND DEVELOPMENT COMMAND DOVER, NEW JERSEY 07801		
	PART NO. 8806652		
NEXT ASSY / USED ON	MECHANICAL PROPERTIES: YP, TS, EL2, RA, BH, RH	UNLESS OTHERWISE SPECIFIED DIMENSIONS ARE IN INCHES	ORIGINAL DATE OF DRAWING 19 JUL 57
APPLICATION		TOLERANCES ON DECIMALS ±	DRAFTSMAN / CHECKER
DO NOT / APPLY PART NO.		FRACTIONS ± ANGLES ±	ENGR / ENGR
AS SPECIFIED		MATERIAL	ENGR / ENGR
		HEAT TREATMENT	SUBMITTED
		FINAL PROTECTIVE FINISH	APPROVED

~~PICATINNY ARSENAL DOVER, NEW JERSEY~~

MARKING AND SEALING FOR CYLINDRICAL CONTAINERS

SIZE	CODE IDENT NO.	
C	~~19203~~	8806652
SCALE	UNIT WT.	SHEET 1 OF 2

SHUPA 1040 MAY 66 REPLACES AMC 1031-4 R, 1 JAN 63 WHICH IS OBSOLETE

ATTACHMENT 015

COLOR CODE FOR PATCHES

TYPE OF EXPLOSIVE	WAR RESERVE	TRAINING	PRACTICE
HIGH EXPLOSIVE	YELLOW NO. 33538 TT-E-485 OR TT-E-516	NONE	YELLOW/BLUE NO. 33538 NO. 35109 TT-E-485 OR TT-E-516
LOW EXPLOSIVE	BROWN NO. 30117 TT-E-485 OR TT-E-529	NONE	BROWN/BLUE NO. 30117 NO. 35109 TT-E-485 OR TT-E-516 OR TT-E-529
WITHOUT EXPLOSIVE (INERT)	NONE	BRONZE NO. 17043 TT-L-50	BLUE NO. 35109 TT-E-485 OR TT-E-516

REVISIONS

SYM	DESCRIPTION		DATE	APPROVAL
R	EAE7301025-4/M-22-73 (REL)	W	12-6-74	
S	NOR 7600060-4/01-23-76	M	02-11-76	
T	NOR A9K2527/79-11-02		79-11-16	

U S ARMY ARMAMENT RESEARCH AND DEVELOPMENT COMMAND
DOVER, NEW JERSEY 07801

CODE IDENT NO. 19200

PART NO. 8806652

NEXT ASSY	USED ON		
APPLICATION			

MECHANICAL PROPERTIES: YP, TS, EL2, RA, BH, RM

DO NOT SCALE DRAWING
UNLESS OTHERWISE SPECIFIED DIMENSIONS ARE IN INCHES
TOLERANCES ON DECIMALS ±
FRACTIONS ± ANGLES ±

ORIGINAL DATE OF DRAWING 19 JULY 57

DRAFTSMAN W | CHECKER | ENGR | ENGR | ENGR | ENGR

~~US ARMY MUNITIONS COMMAND~~
~~PICATINNY ARSENAL, DOVER, NEW JERSEY 07801~~

MARKING AND SEALING FOR CYLINDRICAL CONTAINERS

SIZE B | CODE IDENT NO. ~~19203~~ | 8806652
SCALE | UNIT WT. | SHEET 2

SMUPA FORM 1039 OCT 70