DRAWING SIZE F

ZONE	LTR	DESCRIPTION	DATE (YR MO DA)	APPROVED
	C	THIS SHEET ADDED NOR M3K2029 930601	930601	TPT
	E	NOR ROK2011/00607	000714	BAC

THIS DRAWING HAS BEEN GENERATED ON A CAD SYSTEM LOCATED AT ARDEC, BLDG. 6, PICATINNY ARSENAL, N.J. CHANGES MUST BE INCORPORATED VIA THIS SYSTEM.

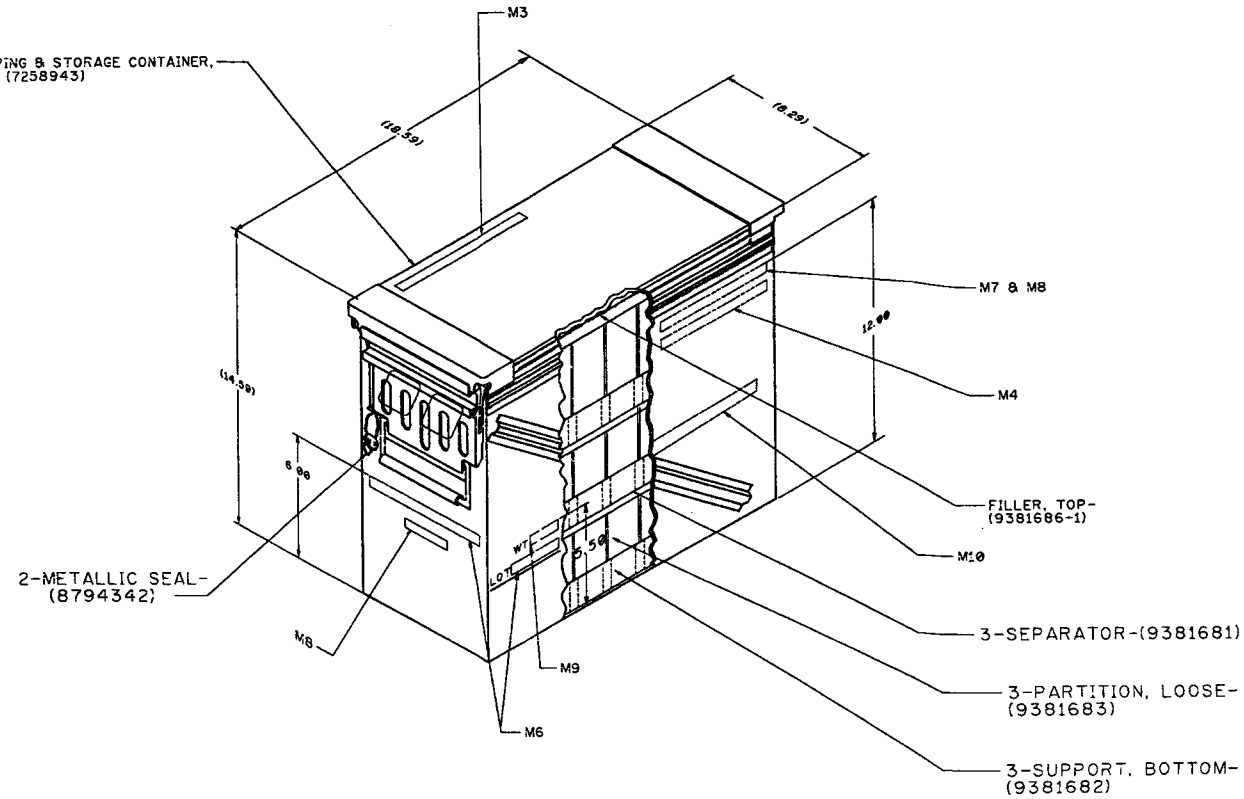

TABLE 1

DESCRIPTIVE NOMENCLATURE	PART NUMBER	PROPER SHIPPING NAME	IDENTIFICATION NUMBER	NSN	DODIC	POP MARKING
72-FUZE, P.D., M935	9255258	FUZES, DETONATING	UN 0409	1390-01-268-9155	N342	(u n) 4A/Y81/S/** USA/DOD/AYD
72-FUZE, P.D., M936	9390425	FUZES, DETONATING	UN 0409	1390-01-240-9257	N658	(u n) 4A/Y81/S/** USA/DOD/AYD

** INSERT THE LAST TWO DIGITS OF YEAR PACKED.

DISTRIBUTION STATEMENT A
APPROVED FOR PUBLIC RELEASE: DISTRIBUTION IS UNLIMITED.

PART NO. 9381686

DESIGN ACTIVITY U.S. ARMY ARMAMENT RESEARCH, DEVELOPMENT AND ENGINEERING CENTER PICATINNY ARSENAL, NEW JERSEY 07805-5000

PACKING AND MARKING OF CONTAINER, M548 FOR FUZE, PD, M935 OR M936

PMIC		DO NOT SCALE DRAWING	CONTRACT NUMBER
MECHANICAL PROPERTIES		UNLESS OTHERWISE SPECIFIED DIMENSIONS ARE IN INCHES TOLERANCES ON DECIMAL 2 PL ± 3 PL ± FRACTION ±	CONTRACTOR
YP		THIRD ANGLE PROJECTION	DRAWN BY J.S. DATE(YR-MO-DA) 86-03-24
TS			CHECKER J. FENICK ENGINEER D. WAGNER
RA			DRAWING APPROVAL S. WOOD
BH	9395584 81 MM MORTAR	MATL ENGR	DESIGN APPROVAL STEVE RUFFINI
RH	NEXT ASSY USED ON	CADDS REV - 002	
	APPLICATION		

SIZE F CAGE CODE 19200 9381686
SCALE UNIT WT SHEET 2 OF 2

SVCAR FORM 69, 1 DEC 87(TEMP) REPLACES SVCAR FORM 69, 1 JUL 87(TEMP) WHICH MAY BE USED UNTIL EXHAUSTED

DRAWING SIZE F

ZONE	LTR	DESCRIPTION	DATE (YR MO DA)	APPROVED
	C	NOR M3K2029 930601	930706	TPT
	D	NOR M6J3009 960321	960423	TPT
	E	NOR R0K2011/000607	000714	BAC

PACKAGING COMPONENTS

1- SHIPPING AND STORAGE CONTAINER, M548 - 7258943

72- SUPPORT, FUZE - 9297904

2- SEAL, METALLIC - 8794342

3- SEPARATOR - 9381681

3- SUPPORT, BOTTOM - 9381682

3- PARTITION, LOOSE - 9381683

FILLER, TOP - 9381686-1

16 3/4 X 7 X 1/16 NOM +1/8 TOLERANCE
NOTES B, C

INK
NOTES B, D, E

PAINT
NOTES B, F

INSTRUCTIONS FOR REUSE OF PACKAGING MATERIAL

REUSE OF ALL PACKAGING MATERIAL IS PERMISSIBLE AND RECOMMENDED WHEN CONSIDERED ECONOMICALLY FEASIBLE BY THE PROCURING ACTIVITY AND THE MATERIAL IS IN USABLE CONDITION.

NOTES: -

A- SPEC MIL-A-2550 AND ANSI Y14.5M-1982 APPLY.

B- QUANTITY: - AS REQUIRED.

C- MATERIAL: - FIBERBOARD IN ACCORDANCE WITH MIL-PRF-50449.

D- MATERIAL: - INK, STENCIL, WHITE NO. 37875, SPEC A-A-208, TYPE I OR III.

E- ALTERNATIVE MATERIAL: - INK IN ACCORDANCE WITH DWG. 9211788.

F- PAINT, FOREST GREEN NO. 34079 IN ACCORDANCE WITH DWG. 9347108.

G- PAINT, LATEX BASE, FOR EXTERIOR SURFACES, COLOR ORANGE NO. 32246, TYPE III, SPEC TT-P-19.

REFERENCE DATA

FOR FUZE, PD, M935 SEE DWG 9255258
FOR FUZE, PD, M936 SEE DWG 9390425

CUBE = 1.30 CUBIC FEET

WEIGHTS (ESTIMATED):

CONTAINER, M548 (EMPTY)	19.60 LBS.
PARTITIONS, SUPPORTS, SEPARATORS & FILLER	10.00 LBS.
72 FUZES, PD, M935 OR M936	41.00 LBS.
GROSS WT.	70.60 LBS.

DISTRIBUTION STATEMENT A
APPROVED FOR PUBLIC RELEASE: DISTRIBUTION IS UNLIMITED.

PACKING INSTRUCTIONS

P1- PAINT DAMAGED PRIOR TO OR DURING THIS ASSEMBLY MUST BE RETOUCHED PER DRAWING (9347108). SEE NOTE F.

P2- ALL PACKING MATERIAL SHALL BE THOROUGHLY DRY AT TIME OF PACKING. 9% MAXIMUM MOISTURE CONTENT OF PAPER PRODUCTS.

P3- PLACE BOTTOM SUPPORT-(9381682) ON BOTTOM OF CONTAINER-(7258943).

P4- ASSEMBLE LOOSE PARTITION-(9381683) AND PLACE ON TOP OF BOTTOM SUPPORT-(9381682).

P5- INSERT TWENTY-FOUR (24) FUZES, BASE DOWN, INTO CELLS OF LOOSE PARTITION WITH THREADED END OF FUZE INSERTED INTO HOLE OF BOTTOM SUPPORT.

P6- PLACE TWENTY-FOUR (24) FUZE SUPPORTS-(9297904) OVER WINDSHIELDS OF FUZES.

P7- PLACE SEPARATOR-(9381681) ON TOP OF FUZES TO COMPLETE FIRST LAYER.

P8- PLACE BOTTOM SUPPORT-(9381682) ON TOP OF SEPARATOR-(9381681).

P9- REPEAT P4 THRU P8 TO COMPLETE SECOND LAYER.

P10- REPEAT P4 THRU P7 TO COMPLETE THIRD LAYER.

P11- ADD TOP FILLERS-(9381686-1) AS REQUIRED TO ENSURE A TIGHT PACK.

P12- CLOSE CONTAINER AND MARK AS INDICATED.

P13- ATTACH METALLIC SEALS (8794342) TO EACH END OF CONTAINER THREAD WIRE THROUGH LATCH, HASP AND SEAL. DRAW TIGHT AND CRIMP IN ACCORDANCE WITH 8794342.

MARKING INSTRUCTIONS

M1- MARK IN ACCORDANCE WITH DWG 12982865 MARKING SHALL BE STAMPED OR STENCILED ON TOP, FRONT, BACK, AND BOTH ENDS OF CONTAINER AS SHOWN ON THIS DRAWING.

M2- ALL LETTERS AND FIGURES SHALL BE 1/2 INCH HIGH. SPACE BETWEEN LINES SHALL BF 3/8 INCH.

M3- INSERT PROPER SHIPPING NAME AND IDENTIFICATION NUMBER. SEE TABLE 1 .

M4- INSERT DESCRIPTIVE NOMENCLATURE. SEE TABLE 1.

M5- INSERT POP MARKING ON THE SIDE OPPOSITE DESCRIPTIVE NOMENCLATURE. SEE TABLE 1.

M6- INSERT LOT NUMBER ON BOTH ENDS AND ONE SIDE OF THE CONTAINER IN ACCORDANCE WITH MIL-STD-1168. LOT NUMBER LOCATED ON THE SIDE OF THE CONTAINER SHALL BE UNDERLINED.

M7- INSERT NSN. SEE TABLE 1.

M8- INSERT DODIC. SEE TABLE 1.

M9- INSERT GROSS WEIGHT IN POUNDS ROUNDED UP TO THE NEAREST POUND.

M10- APPLY BAR CODE MARKING.

M11- WHEN LESS THAN A FULL CONTAINER OF FUZES IS PACKED, THE CONTAINER SHALL BE PAINTED ORANGE AND APPROPRIATELY MARKED. THE WORDS "LIGHT BOX" SHALL BE MARKED ON THE FRONT AND BACK OF CONTAINER USING THE SAME SIZE LETTERS AS USED FOR THE NOMENCLATURE MARKING. PACK IN ACCORDANCE WITH DRAWING 9325874. SEE NOTE G.

E	E
SH 2	SH 1
REV STATUS OF SHEETS	

PART NO. 9381686

PMIC		
MECHANICAL PROPERTIES		
YP		
TS		
EL%		
RA		
BH	9395584	BIMM MORTAR
RH	NEXT ASSY	USED ON
	APPLICATION	

DO NOT SCALE DRAWING
UNLESS OTHERWISE SPECIFIED DIMENSIONS ARE IN INCHES
TOLERANCES ON
DECIMAL: 2 PL ± .25; 3 PL ±
FRACTION: ±
THIRD ANGLE PROJECTION
MATL ENGR

CONTRACT NUMBER
CONTRACTOR
DRAWN BY J.S. DATE (YR-MO-DA) 86-03-24
CHECKER J. FENICK
ENGINEER D. WAGNER
DRAWING APPROVAL S. WOOD
DESIGN APPROVAL STEVE RUFFINI

DESIGN ACTIVITY U.S. ARMY ARMAMENT RESEARCH, DEVELOPMENT AND ENGINEERING CENTER PICATINNY ARSENAL, NEW JERSEY 07806-5000

PACKING AND MARKING OF CONTAINER, M548 FOR FUZE, PD, M935 OR M936

SIZE F | CAGE CODE 19200 | 9381686
SCALE | UNIT WT. | SHEET 1 OF 2

SMCAR FORM 69, 1 DEC 87(TEMP) REPLACES SMCAR FORM 69, 1 JUL 87(TEMP) WHICH MAY BE USED UNTIL EXHAUSTED