NOTES: -

1 - SPEC MIL-A-2550 AND AMERICAN WELDING SOCIETY STANDARD AWS A2.0 AND A3.0 APPLY.
2- ALTERNATIVE :- PROJECTION WELD, 1/8 DIA MIN.
3- CLEAN AND PREPARE ALL METAL SURFACES IN ACCORDANCE WITH FINISH 5.1.1 OF MIL-STD-171 FOLLOWED BY A 1.0 MIL THICKNESS OF PAINT, DRAWING 9347108 .
4- IF CONTAINER IS RECONDITIONED, THE WORD "REHAB, MONTH AND YEAR OF RECONDITIONING AND ACTIVITY PERFORMING RECONDITIONONG SHALL BE STENCILED IN WHITE INK ON SAME END AS MANUFACTURER'S IDENTIFICATION. LETTERING SHALL BE A MINIMUM OF 3/8 INCH HIGH.

REVISIONS				
ZONE	LTR	DESCRIPTION	DATE (YR MO DA)	APPROVED
	D	NOR M4K2035 940804	94-08-11	HJS
	E	NOR R7K2054 980121	980213	JB

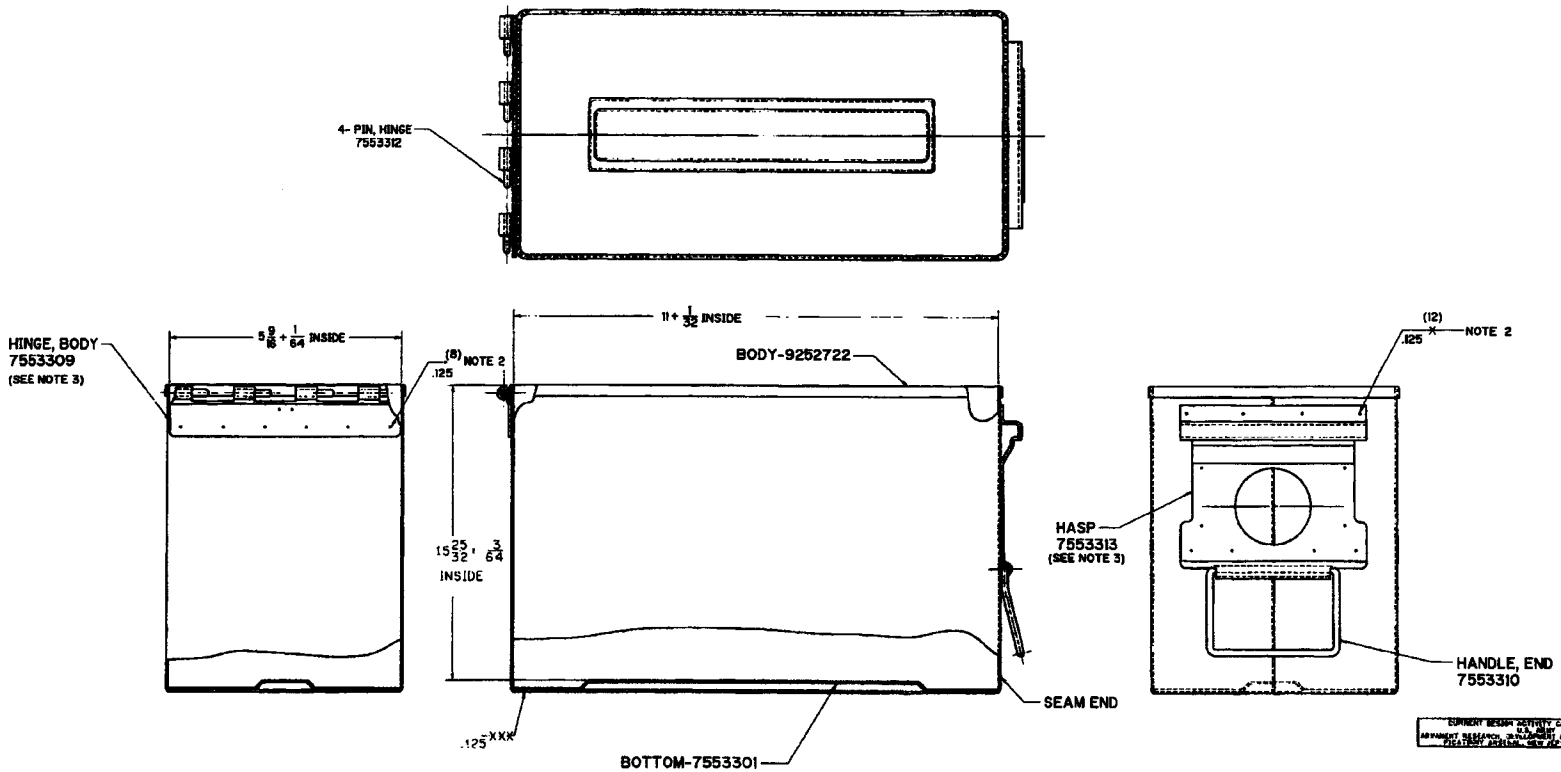

SEE SEPARATE PARTS LIST 9252723

PART NO. 9252723

PMC		DO NOT SCALE DRAWING	CONTRACT NUMBER
MECHANICAL PROPERTIES		UNLESS OTHERWISE SPECIFIED DIMENSIONS ARE IN INCHES TOLERANCES ON DECIMAL ± FRACTION ±	CONTRACTOR
		THIRD ANGLE PROJECTION	DRAWN BY JJH DATE 18 JULY 79
	9252724	CONT/PA76	CHECKED FW CHANGED H.JO/WB
NEXT ASSY	USED ON		DESIGN APPROVAL JIM SPILMAN
APPLICATION			DESIGN APPROVAL H M WEINS

PICATINNY ARSENAL DOVER, NEW JERSEY

BODY ASSEMBLY

SIZE	CAGE CODE	
F	19203	9252723
SCALE 1/1	WT.	SHEET

DISTRIBUTION STATEMENT A.
APPROVED FOR PUBLIC RELEASE:
DISTRIBUTION IS UNLIMITED.

SMCAR FORM 69, 1 DEC 87(TEMP) REPLACES SMCAR FORM 69, 1 JUL 87(TEMP) WHICH MAY BE USED UNTIL EXHAUSTED