C 7553313

REVISIONS			
LTR	DESCRIPTION	DATE	APPROVED
5	← →	5-6-64	
A	EO # S60220 & S60180, REDRAWN W/CHANGES FORMERLY SHOWN ON B 7553313	5-15-67	
B	(1)SEE ERR S30563	12-18 73	
C	NOR A1S2028 820216	820405	
D	NOR M1K2108/911010	920303	
E	ERR M5K2025 / 950721 (ECP M5K3011 / 950804)	960301	DR

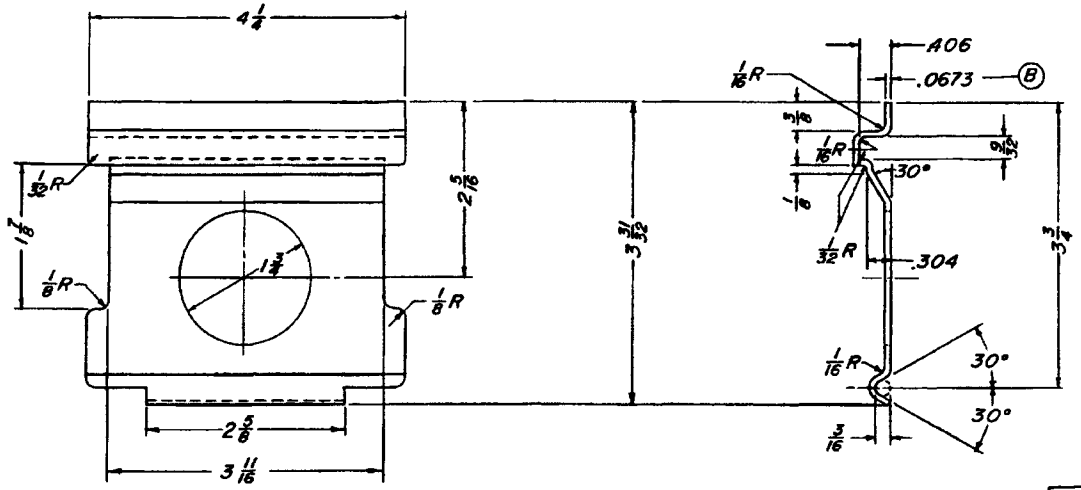

NOTES:
1 - SPEC MIL-A-2550 APPLIES.
2 - MATERIAL:- COLD ROLLED STEEL PER ASTM-A109 OR ASTM-A568.

CURRENT DESIGN ACTIVITY CAGE CODE 19200
U.S. ARMY
ARMAMENT RESEARCH, DEVELOPMENT AND ENGINEERING CENTER
PICATINNY ARSENAL, NEW JERSEY 07806-5000

U S ARMY ARMAMENT RESEARCH AND DEVELOPMENT COMMAND
DOVER, NEW JERSEY 07801

PART No. 7553313

MECHANICAL PROPERTIES			
YP			
TS		8865542	CONT/PA19
EL 2			BOX, M2A1
RA		D7553297	BODY ASSY
BH		SEE ENGINEERING RECORDS	
		NEXT ASSY	USED ON
BH	B55 MIN	APPLICATION	
		DO NOT APPLY PART NO.	

UNLESS OTHERWISE SPECIFIED DIMENSIONS ARE IN INCHES
TOLERANCES ON FRACTIONS ± 1/64
DECIMALS ± .005 ANGLES ± 3°0'0"
MATERIAL
HEAT TREAT
PROTECTIVE FINISH

ORIGINAL DATE MARCH 20, 1951
DRAFT R. L. B. CHK J. J. C.
TRACER CHK
ENGR M. T. C. ENGR
SUBMITTED W. T. Cahill
APPROVED J. Chaano

U. S. ARMY
FRANKFORD ARSENAL
PHILADELPHIA, PA. 19137

ADEL
ESO - SCA

HASP

SIZE	CODE IDENT NO.	DRAWING NO.
C	19200	7553313

SCALE 1/1 UNIT WT. SHEET 1 OF 1

DISTRIBUTION STATEMENT A.
APPROVED FOR PUBLIC RELEASE;
DISTRIBUTION IS UNLIMITED.