REVISIONS			
LTR	DESCRIPTION	DATE	APPROVED
3	← →	7-17-63	
A	EO NO 560220 REDRAWN W/CHANGE	5-15-67	
B	NOR AIS2028 820216	820405	
C	NOR M8S2021/880802	890110	
D	NOR MIK2108/911010	920303	
E	ERR M5K2025 / 950721 (ECP M5K3011 / 950804)	960301	DR
F	NOR M6K2070 970107	970221	RLV

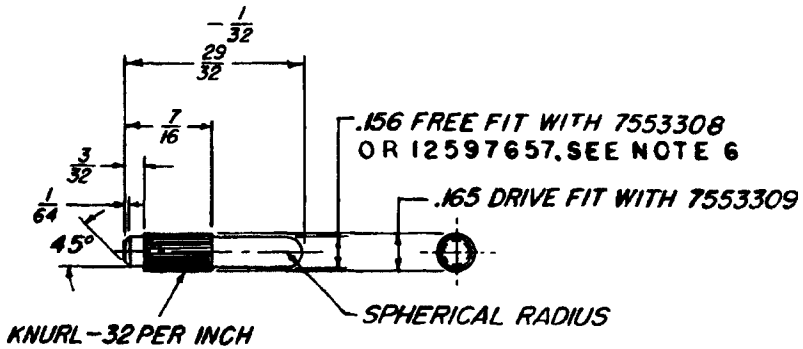

NOTES:

1 SPEC MIL-A-2550 APPLIES.
2 *MATERIAL:*- COLD FINISH STEEL PER ASTM-A576 (1060-1080).
3 *ALTERNATE MATERIAL:- COLD FINISH STEEL (C1117)* PER ASTM-A108
4 *MECHANICAL PROPERTIES:-(1060-1080) C-35-45*
5 *HEAT TREATMENT-(1117) CASE HARDEN, .008 DEEP MIN.*
6 *FINAL PROTECTIVE FINISH: MIL-STD-171 #1-9-1-1*
ALTERNATE FINISH: #1-1-1-2
7 PART NUMBER 7553308 SHALL BE USED WITH M2A1 CONTAINER. PART NUMBER 12597657 SHALL BE USED WITH PA108 CONTAINER

DISTRIBUTION STATEMENT A.
APPROVED FOR PUBLIC RELEASE;
DISTRIBUTION IS UNLIMITED.

CURRENT DESIGN ACTIVITY CAGE CODE 19200
U.S. ARMY
ARMAMENT RESEARCH, DEVELOPMENT AND ENGINEERING CENTER
PICATINNY ARSENAL, NEW JERSEY 07806-5000

PART No. 7553312

8865542	CONT/PA19
	BODY ASSY
9396179	PA108
	BOX, M2A1
D7553297	BODY ASSY
SEE ENGINEERING RECORDS	
NEXT ASSY	USED ON
APPLICATION	
DO NOT	APPLY PART NO.

MECHANICAL PROPERTIES: YP, TS, EL 2, RA, RH, RH — SEE NOTES

UNLESS OTHERWISE SPECIFIED DIMENSIONS ARE IN INCHES
TOLERANCES ON FRACTIONS ±1/64 DECIMALS ±.005 ANGLES 3°00'
MATERIAL: ~~SEE NOTES 1 & 2~~
HEAT TREAT: ~~SEE NOTE 4~~
PROTECTIVE FINISH: ~~SEE NOTE 5~~

ORIGINAL DATE: MARCH 20, 1951
DRAFT: R.L.B. CHK: J.Y.B.
TRACER: CHK:
ENGR: ENGR:
SUBMITTED: W. F. Cahill
APPROVED: J. Lamo

U. S. ARMY
FRANKFORD ARSENAL
PHILADELPHIA, PA. 19137

ADEL
ESO-SCA

PIN, HINGE

SIZE: B | CODE IDENT NO.: 19200 | DRAWING NO.: 7553312
SCALE: 2/1 | UNIT WT. | SHEET 1 OF 1