B7553311

REVISIONS			
LTR	DESCRIPTION	DATE	APPROVED
2	← →	7-17-63	
A	EO. NO. S60220 REDRAWN W/O CHANGE	5-15-67	
B	NOR AIS2028 820216	820405	TF
C	NOR MOK2076 901211	900130	TF
D	NOR MIK2108/911010	920303	[illegible]
E	ERR M5K2025 / 950721 (ECP M5K3011 / 950804)	960301	DR
F	NOR M6K2070 970107	970221	RLV

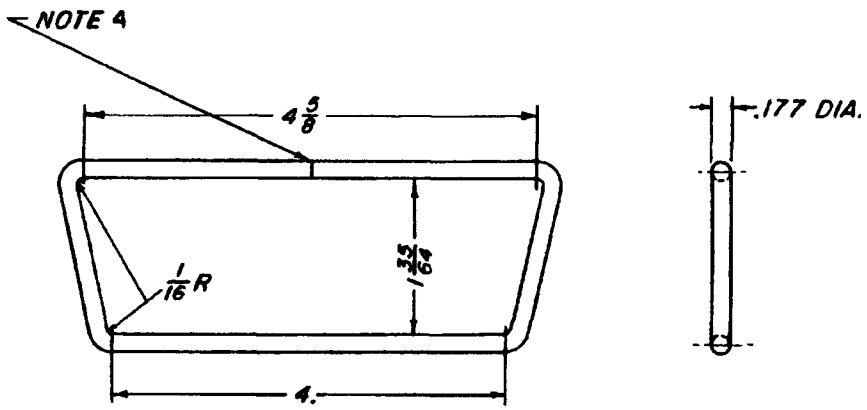

CURRENT DESIGN ACTIVITY CAGE CODE 19200
U.S. ARMY
ARMAMENT RESEARCH, DEVELOPMENT AND ENGINEERING CENTER
PICATINNY ARSENAL, NEW JERSEY 07806-5000

NOTES:
1 - SPEC MIL-A-2550 APPLIES.
2 - MATERIAL:- WIRE, STEEL: 1010: TENSILE STRENGTH, HARD, 75,000 PSI MIN; SPEC, ASTM-A-853
3 - ALTERNATE MATERIAL: WIRE, STEEL-1020; TENSILE STRENGTH, HARD, 85,000 PSI MIN; SPEC, ASTM-A-853
4 - BUTT WELD MUST WITHSTAND A MINIMUM PULL TEST OF 50 LBS.

PART No. 7553311

MECHANICAL PROPERTIES			CONT/PA
TS	SEE NOTES		BOX, M2A1
EL 2		07553298	COVER ASSY
RA		SEE ENGINEERING RECORDS	
BH		NEXT ASSY	USED ON
RH		APPLICATION	
		DO NOT APPLY PART NO.	

UNLESS OTHERWISE SPECIFIED DIMENSIONS ARE IN INCHES
TOLERANCES ON FRACTIONS ±1/64 DECIMALS ±.005 ANGLES ± —
MATERIAL ~~SEE NOTES 1&2~~
NEXT ITEM
PROTECTIVE FINISH

ORIGINAL DATE MARCH 20, 1951
DRAFT R.L.B. CHK Ly. C.
TRACER CHK
ENGR WSB ENGR
SUBMITTED W.S. Bell
APPROVED J. Lane

U. S. ARMY
FRANKFORD ARSENAL
PHILADELPHIA, PA. 19137

LINK, LATCH

SIZE	CODE IDENT NO.	DRAWING NO.
B	19200	7553311
SCALE: 1/1	UN'T WT.	SHEET 1 OF 1

DISTRIBUTION STATEMENT A.
APPROVED FOR PUBLIC RELEASE;
DISTRIBUTION IS UNLIMITED.