C 7553306

NOTES:-
1-SPEC MIL-A-2550 APPLIES.
2-MATERIAL:-COLD ROLLED STEEL PER ASTM-A109 OR ASTM-A568.
3-OTHER METHODS OF ASSEMBLING LINK MAY BE USED.

REVISIONS			
LTR	DESCRIPTION	DATE	APPROVED
4	—	5-6-64	
A	ED.NO.560220 & 60HRO REDRAWN W/CHANGES FORMERLY SHOWN ON B7553306	5-15-67	
B	(1) SEE ERR S30563	12-18-73	
C	NOR A1S2028 820216	820405	
D	NOR M1K2108/911010	920303	
E	ERR M5K2025 / 950721 (ECP M5K3011 / 950804)	960301	DR
F	NOR R8K2035/980917	981020	KN

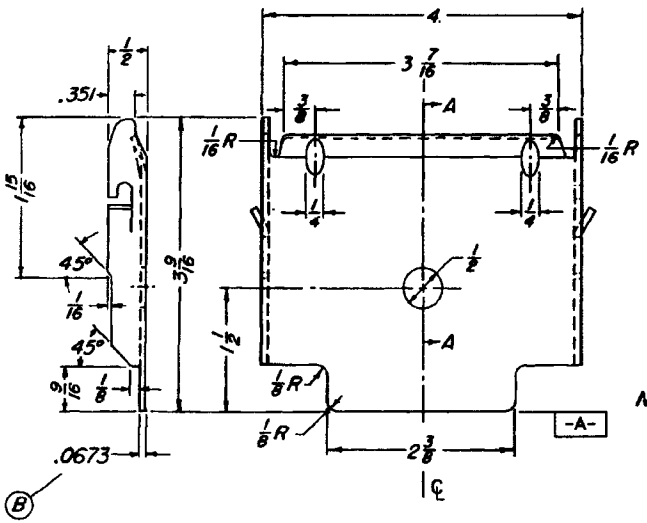

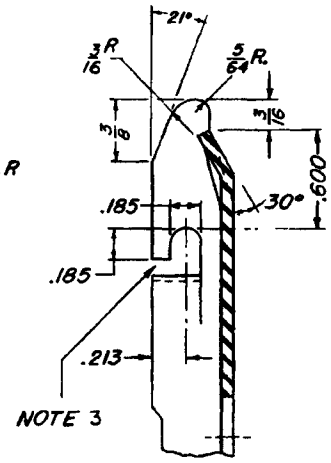

ENLARGED SECTION A-A

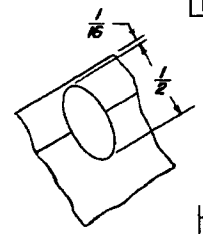

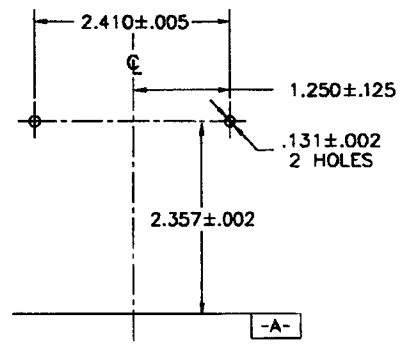

I.D. PLATE HOLES FOR PART NO. 7553306-2

TABLE 1	
PART NUMBER	ID PLATE HOLES
7553306	NO HOLES
7553306-2	HOLES APPLIED

U S ARMY ARMAMENT RESEARCH AND DEVELOPMENT COMMAND
DOVER, NEW JERSEY 07801

CURRENT DESIGN ACTIVITY CAGE CODE 19200
U.S. ARMY
ARMAMENT RESEARCH, DEVELOPMENT AND ENGINEERING CENTER
PICATINNY ARSENAL, NEW JERSEY 07806-5000

PART No. 7553306

MECHANICAL PROPERTIES	
YP	
TS	
EL 2	
RA	
BH	
RH	B-55 MIN

	CONT/PA19
	BOX, M2A1
D7553298	COVER ASSY
SEE ENGINEERING RECORDS	
NEXT ASSY	USED ON
APPLICATION	
DO NOT APPLY PART NO.	

UNLESS OTHERWISE SPECIFIED DIMENSIONS ARE IN INCHES
TOLERANCES ON FRACTIONS ±1/64
DECIMALS ±.005 ANGLES ±3°0'0"
MATERIAL
HEAT TREAT
PROTECTIVE FINISH

ORIGINAL DATE MARCH 20, 1951
DRAFT R.E.B. CHK
TRACER CHK
ENGR ENGR
SUBMITTED
APPROVED

U. S. ARMY
FRANKFORD ARSENAL
PHILADELPHIA, PA. 19137

ADEL
ESO - SCA

LATCH

SIZE	CODE IDENT NO.	DRAWING NO.
C	19200	7553306

SCALE 1/1 2/1 UNIT WT. SHEET 1 OF 1

DISTRIBUTION STATEMENT A.
APPROVED FOR PUBLIC RELEASE;
DISTRIBUTION IS UNLIMITED.