B 7553305

REVISIONS			
LTR	DESCRIPTION	DATE	APPROVED
5	← →	5-664	
A	EO NO S60132 REDRAWN W/O CHANGE	8-2-66	
B	NOR AIS2028 820216	820405	
C	NOR MIK2108/911010	920303	D. Duarte
D	ERR M5K2025 / 950721 (ECP M5K3011 / 950804)	960301	DR
E	NOR M6K2070 970107	970221	RLV

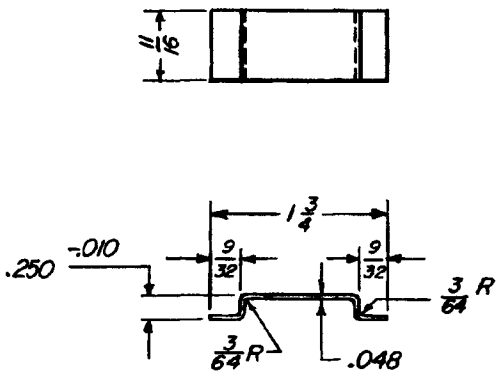

NOTES:
1 SPEC MIL-A-2550 APPLIES.
2 MATERIAL:- COLD ROLLED STEEL - PER ASTM-A109 OR ASTM-A568.

CURRENT DESIGN ACTIVITY CAGE CODE 19200
U.S. ARMY
ARMAMENT RESEARCH, DEVELOPMENT AND ENGINEERING CENTER
PICATINNY ARSENAL, NEW JERSEY 07806-5000

U S ARMY ARMAMENT RESEARCH AND DEVELOPMENT COMMAND
DOVER, NEW JERSEY 07801

PART No. 7553305

MECHANICAL PROPERTIES			
YP		10542303	M528
TS		7553318	M19A1
EL 2		7553298	M2A1/PA19
RA		SEE ENGINEERING RECORDS	
BH		NEXT ASSY	USED ON
RH	B55	APPLICATION	
	Mil:	DO NOT APPLY PART NO.	

UNLESS OTHERWISE SPECIFIED DIMENSIONS ARE IN INCHES.
TOLERANCES ON FRACTIONS DECIMALS ANGLES ±1/64 ±.005 ± —
MATERIAL SEE NOTE 1
HEAT TREAT
PROTECTIVE FINISH

ORIGINAL DATE MARCH 20, 51
DRAFT R.L.B. CHK J.J.K.
TRACER CHK
ENGR ENGR
SUBMITTED
APPROVED

U. S. ARMY
FRANKFORD ARSENAL
PHILADELPHIA, PA. 19137
SMALL CALIBER ENGINEERING

CLIP, COVER HANDLE

SIZE	CODE IDENT NO.	DRAWING NO
B	19200	7553305

SCALE 1/1 UNIT WT. SHEET 1 OF 1

DISTRIBUTION STATEMENT A.
APPROVED FOR PUBLIC RELEASE;
DISTRIBUTION IS UNLIMITED.

SMUFA Form C981* 11 Dec 7*

PROJ BR: DFD