C 7553304

REVISIONS			
LTR	DESCRIPTION	DATE	APPROVED
7	← →	5-6-6[illegible]	
A	EO NO S60132, REDRAWN W/O CHANGE FORMERLY SHOWN ON B7553304	826-66	
B	NOR AIS2028 820216	820405	[illegible]
C	NOR MIK2108/911010	920303	[illegible]
D	ERR M5K2025 / 950721 (ECP M5K3011 / 950804)	960301	DR
E	NOR M6K2070 970107	970221	RLV

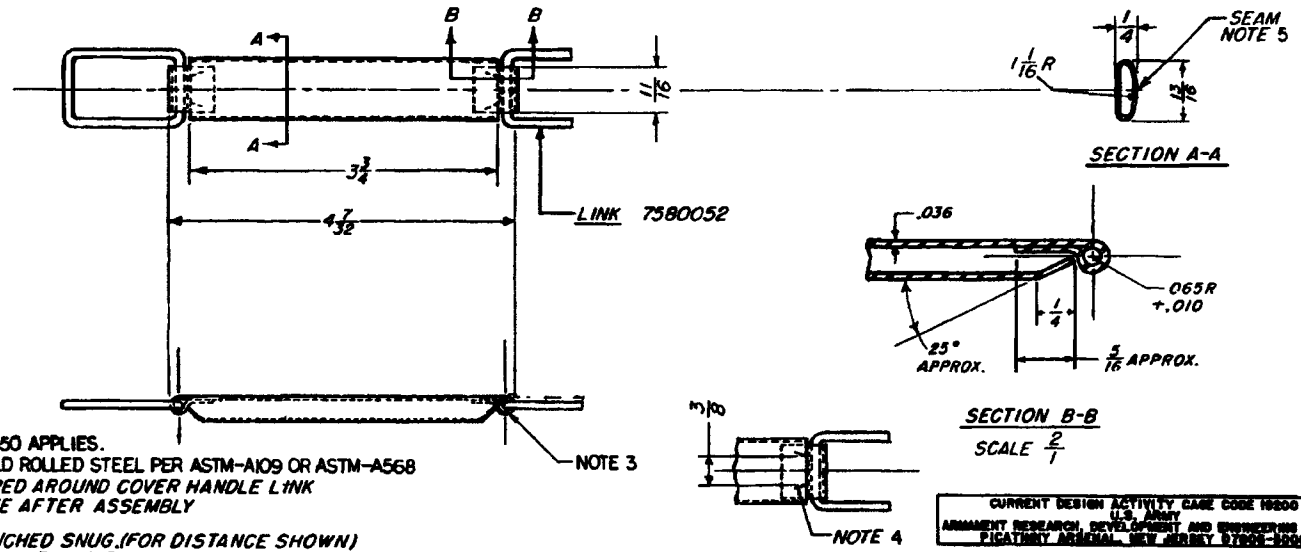

NOTES:
1 - SPEC MIL-A-2550 APPLIES.
2 - MATERIAL:- COLD ROLLED STEEL PER ASTM-A109 OR ASTM-A568
3 - LOOPS WRAPPED AROUND COVER HANDLE LINK MUST BE FREE AFTER ASSEMBLY
4 - MUST BE CLINCHED SNUG.(FOR DISTANCE SHOWN) AS CLOSE TO CURL AS POSSIBLE.
5 - REMOVE ALL BURRS AND SHARP EDGES ALONG SEAM

CURRENT DESIGN ACTIVITY CAGE CODE 19200
U.S. ARMY
ARMAMENT RESEARCH, DEVELOPMENT AND ENGINEERING CENTER
PICATINNY ARSENAL, NEW JERSEY 07806-5000

U S ARMY ARMAMENT RESEARCH AND DEVELOPMENT COMMAND
DOVER, NEW JERSEY 07801

PART No. 7553304

MECHANICAL PROPERTIES			
YP			
TS		10542303	M528
EL 2		7553318	M19A1
RA		7553298	M2A1/PA19
BH		SEE ENGINEERING RECORDS	
RH		NEXT ASSY	USED ON
		APPLICATION	
		DO NOT [illegible]	APPLY PART NO.

UNLESS OTHERWISE SPECIFIED DIMENSIONS ARE IN INCHES
TOLERANCES ON FRACTIONS ± 1/64
DECIMALS ±.005 ANGLES ±
MATERIAL [illegible]
HEAT TREAT
PROTECTIVE FINISH

ORIGINAL DATE MARCH 20, 1951
DRAFT R.S.B. CHK [illegible]
TRACER CHK
ENGR [illegible] ENGR
SUBM [illegible]
APPROVED [illegible]

U. S. ARMY
FRANKFORD ARSENAL
PHILADELPHIA, PA. 19137

SMALL CALIBER ENGINEERING

HANDLE, COVER

SIZE C | CODE IDENT NO 19200 | DRAWING NO. 7553304
SCALE: 1/1 | UNIT WT. | SHEET

DISTRIBUTION STATEMENT A.
APPROVED FOR PUBLIC RELEASE;
DISTRIBUTION IS UNLIMITED.