D7553298

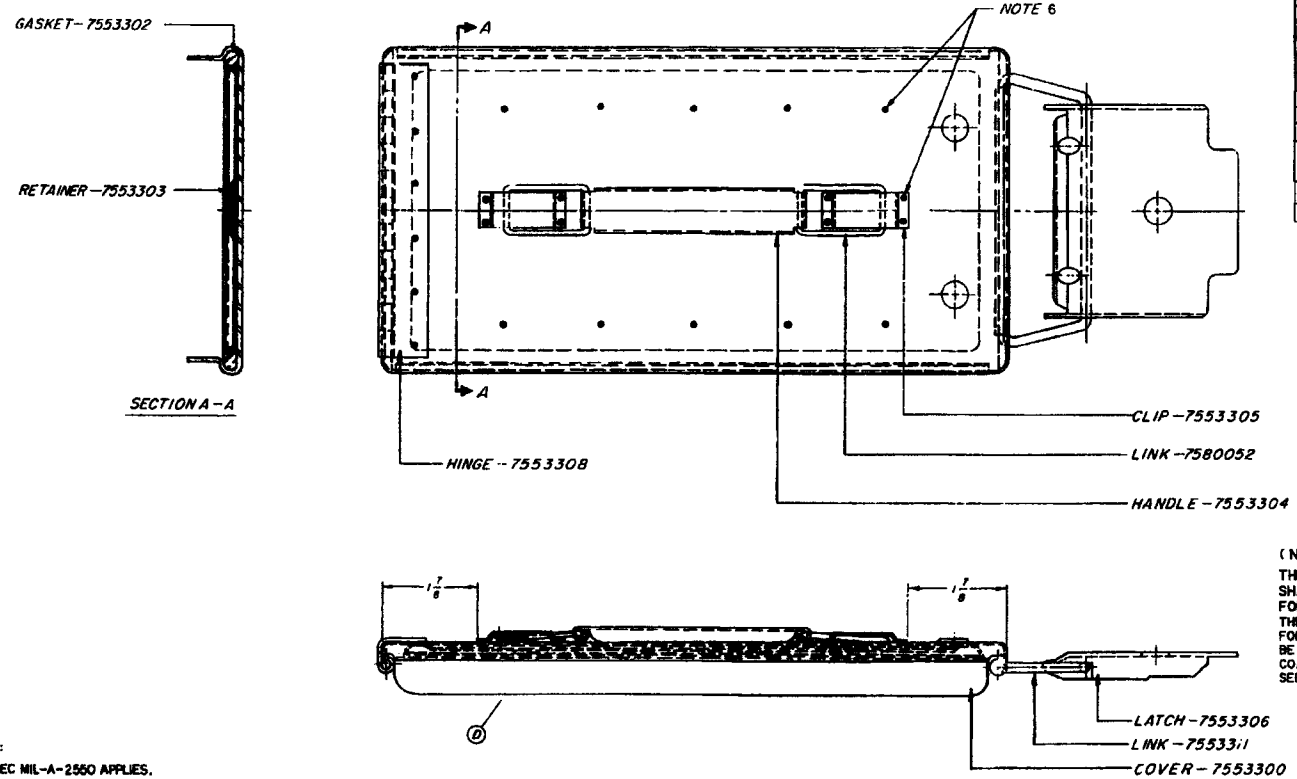

REVISIONS			
LTR	DESCRIPTION	DATE	APPROVED
C	REPLACES REV B WITH CHANGES, ERR 530013	62273	[illegible]
D	(1) SEE ERR 530563	12-18-73	[illegible]
E	NOR A1S2028 820216	820405	[illegible]
F	NOR M1K2108/911010	920303	[illegible]
G	NOR M0A2151/ 900912	920320	[illegible]
H	NOR M2S3028 920623	921008	[illegible]
J	NOR M4K2034 940715	940129	[illegible]
K	ERR M5K2025 / 950721 (ECP M5K3011 / 950804) (ECP M5K2025 / 950810)	960301	DR
L	NOR M6K2045 960807	960924	HJS
M	NOR M6K2071 970107	970224	RLV

TABLE	
PART NUMBER	FINISH
7553298	(2) & (7)
7553298-2	(8)

(NOTE 8 CONTINUED)
THERMALLY-CURED PRIME COATS. THE PAINT SHALL PASS THE APPLICABLE QUALITY CONFORMANCE TESTS SPECIFIED IN QAP 702-1-1. THE QUALITY ASSURANCE PROVISIONS OF MIL-B-3060 FOR PAINT DO NOT APPLY. TOP COAT COLOR SHALL BE GREEN 383, NO. 34094 OF FED-STD-595. TOP COAT NOT REQUIRED ON INSIDE OF COVER ASSEMBLY. SEE TABLE.

NOTES:

1 - SPEC MIL-A-2550 APPLIES.

(2) BEFORE INSERTING GASKET, CLEAN AND PREPARE ALL METAL SURFACES IN ACCORDANCE WITH FINISH 5.1.1 OF MIL-STD-171 FOLLOWED BY A 1.0 MIL THICKNESS OF PAINT, DRAWING 9347108, SEE TABLE (7).

3 - AFTER PAINTING, INSERT GASKET UNDER SLIGHT COMPRESSION BY GASKET RETAINER SO THAT NO CLEARANCE EXISTS BETWEEN GASKET AND RETAINER OR GASKET AND COVER AT SIDES AND ENDS.

4 - COVER SHALL BE STRAIGHT WITH NOT MORE THAN .024 CONVEXITY NOR MORE THAN .010 CONCAVITY ALONG THE LENGTH AT GASKET POSITION, MEASURED ON THE OUTSIDE.

5 - COVER SHALL BE STRAIGHT WITH NOT MORE THAN .015 CONVEXITY NOR MORE THAN .010 CONCAVITY ALONG THE WIDTH AT GASKET POSITION, MEASURED ON THE OUTSIDE.

6 - SPOT OR PROJECTION WELD 1/8 DIA MIN, SPEC MIL-W-12332.

(7) ALTERNATE PROTECTIVE COATING AND PAINT MAY BE USED PROVIDED THAT THE PROPOSED FINISH PROVIDES EQUAL OR SUPERIOR PROTECTION AND IS APPROVED BY THE CONTRACTING OFFICER, SEE TABLE.

(8) CARC PROTECTIVE FINISH: BEFORE INSERTING GASKET, THE FOLLOWING SHALL BE ACCOMPLISHED: ALL METAL SURFACES SHALL BE CLEANED IN ACCORDANCE WITH ANY METHOD SPECIFIED IN TABLE IV AND PRETREATED WITH FINISH 5.1.1 OF MIL-STD-171. AFTER CLEANING AND PRETREATING FOLLOW WITH PRIMER AND TOP COAT IN ACCORDANCE WITH MIL-STD-171 FINISH 20.24. THE PAINT SHALL BE APPLIED IN ACCORDANCE WITH MIL-C-53072 EXCEPT THAT A DIPPING PROCESS IS PERMISSIBLE FOR

DISTRIBUTION STATEMENT A. APPROVED FOR PUBLIC RELEASE; DISTRIBUTION IS UNLIMITED.

CURRENT DESIGN ACTIVITY CODE IDENT NO. [illegible]
ARMAMENT RESEARCH, DEVELOPMENT AND ENGINEERING CENTER
PICATINNY ARSENAL, NEW JERSEY 07806-5000

U S ARMY ARMAMENT RESEARCH AND DEVELOPMENT COMMAND
DOVER, NEW JERSEY 07801

PART No. SEE TABLE

8865541	CONT/PAP	
D7553298	BOX, M2A1	

APPLICATION

APPLY IDENTIFICATION PER MIL-STD-130

SEE NOTE 1

ORIGINAL DATE MARCH 20, 1951

U. S. ARMY FRANKFORD ARSENAL PHILADELPHIA, PA. 19137

SCA

COVER ASSEMBLY

D 19200 7553298

SCALE 1/1 SHEET 1 OF 1