DRAWING SIZE B

NOTES:
1. BRASS, COPPER ALLOY UNS NO. C26000, ANNEALED, ASTM B 36 (.010 THICK).
2. 63 ALL OVER.

REVISIONS			
SYM	DESCRIPTION	DATE	APPROVAL
—	PRODUCT BASELINE ERR M2J2050	921229	RR
A	NOR M3J2009/930413	930518	
B	NOR M3J2016/930514	930824	

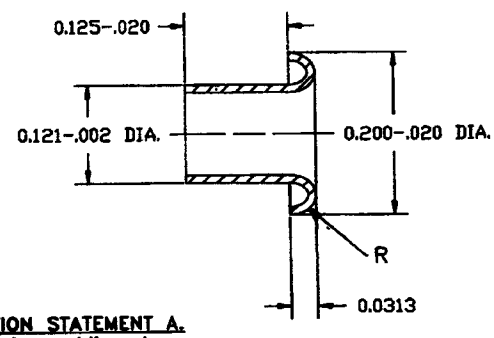

12960764	M880
12960767	M840
12912960	M984
12960765	M983
12960766	M720
12912958	M877
12912954	M853
12912955	M819
12912961	M808
12913063	M792
12913064	M721
NEXT ASSY	USED ON
APPLICATION	

DISTRIBUTION STATEMENT A.
Approved for public release, distribution is unlimited.

PART NO. 12960751

MECHANICAL PROPERTIES	
YP	
TS	
EL2	
RA	
BH	
RH	

DO NOT SCALE DRAWING
UNLESS OTHERWISE SPECIFIED DIMENSIONS ARE IN INCHES
TOLERANCES ON DECIMALS ±
FRACTIONS ± ANGLES ±
THIRD ANGLE PROJECTION

ORIGINAL DATE OF DRAWING 921006
DRAFTSMAN AET CHECKER GME
ENGR RW ENGR ENGR ENGR ENGR

U.S. ARMY
ARMAMENT RESEARCH, DEVELOPMENT AND ENGINEERING CENTER
PICATINNY ARSENAL, NEW JERSEY 07806-5000

EYELET

SIZE B CAGE CODE 19200 12960751
SCALE None UNIT WT. SHEET

SMCAR FORM 66, 1 JUL 87(TEMP) REPLACES SMCAR FORM 66, 1 JUN 86(TEMP) WHICH IS OBSOLETE